c3controls®

Everything under control.

PRODUCT CATALOG

Edition 27

THE BEST ELECTRICAL CONTROLS BUSINESS ON THE PLANET!

Unmatched Service | Superior Product Quality | Advantage Pricing

TEAMWORK MAKES THE DREAMWORK;

Geoff Taylor with his family

c3controls really is a special company doing great things. In 1976 my father, with my mother by his side, left the security of a great career at Westinghouse to become an entrepreneur and together began their version of the American Dream.

While my father passed suddenly in 1996, and now beginning into the 3rd generation, we still carry on his legacy with our own unique twist. Since 1996, we have grown dramatically and just finished another record year. Our growth has been more than just in revenue and team members — continued product development & innovation, added global c3 controlled manufacturing facilities, improved business and operational processes, and expanded relationships focused on trust and helping our customers achieve greater profitability. Through these great relationships we are improving the lives of our team members, the communities where we live and serve here in the USA, El Salvador, and India as well as customers' communities around the world.

We have been blessed to be able to start a non-profit named c3compassion. Through c3compassion we are investing in and directly sponsoring educational opportunities and scholarships for children, orphans, and the less fortunate in the communities around the globe where c3controls facilities are located. We strongly believe that education provides hope for a better future for generations to come.

Yes, we have come a long way since my parents founded the company in our basement and garage. We have though remained true to our principles and continue to be guided by our Christian core values. In the beginning, they set out to build a great product. Today, we are building a great company with clear points of distinction, providing unique and dramatic advantages to our 13,000+ customers.

Thank you for your trust and support. We know we have to continue to earn that trust each and every day. We do not take that trust lightly.

With your continued support, we are well on our way to be the Best Electrical Controls Business on the Planet! Helping, in our small way, to make the world a better place along the way!

If I can ever be of assistance, please do not hesitate to reach out to me directly at gtaylor@c3controls.com. It is our passion to make doing business with c3controls ridiculously easy.

Geoff Taylor

GEOFF TAYLOR
PRESIDENT & CEO

1

Values Driven

Integrity in all our dealings
Respect & Compassion for team(s) and people
Contributing to the success of our customers
Risk-taking, innovation and learning
Balanced, long-term perspective
100% accountability / 0 excuses

2

Integrated Manufacturing

Vertical integration is the cornerstone of c3controls as it places innovation, development, design, manufacturing, testing, and shipping all within our control. With Everything Under Control, we can ensure the highest quality and customer satisfaction.

3

Innovation

Product innovation is in our DNA. We approach our products as solutions. Unlike our competition, our business model allows us to provide customers with premium controls without the premium price.

4

Same-Day Shipping

Reduce inventory. Improve cash-flow. Save money. Our customers enjoy peace of mind knowing they'll get what they need, when they need it. Our promise, guaranteed!

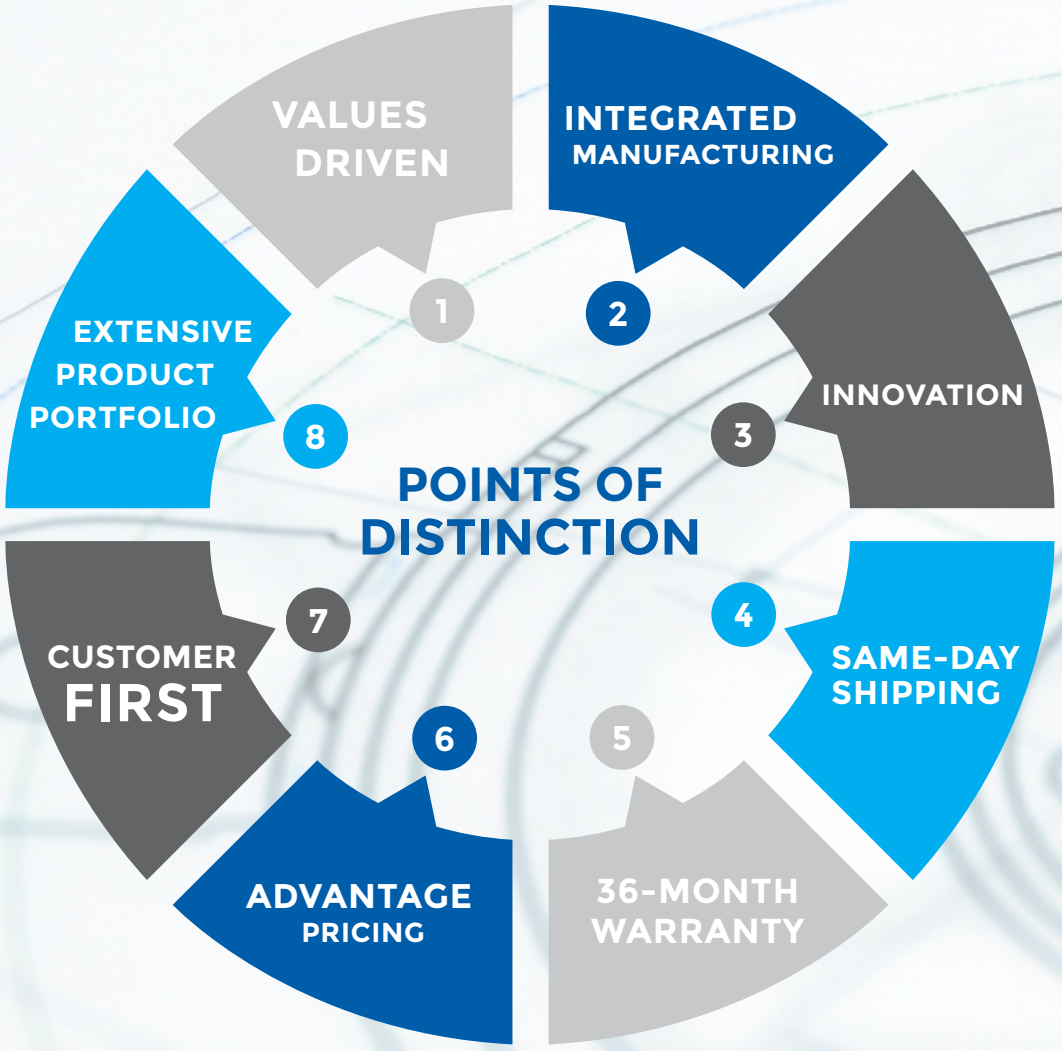

5

36-Month Warranty

With total control over engineering and manufacturing, we are able to stand behind the highest quality products on the market—products backed by a 36-Month Warranty and designed to be free of defects in material, workmanship, and design.

6

Advantage Pricing

Total control means lower overhead and direct sales. For our customers, this translates to savings of up to 40+% on c3controls premium products.

7

Customer First

Commitment to the success of our customers is a core value and the driving force behind all we do. We promise concierge style service that makes doing business easy, personalized, and responsive.

8

Extensive Product Portfolio

Our 15 million+ product configurations deliver durability and reliability—even in the most punishing environments—meeting and exceeding global standards for quality and safety.

PRODUCT PORTFOLIO

POWER & ACTUATION

1 Disconnect Switches
3 Miniature Circuit Breakers, UL489 & UL1077
32 Miniature Circuit Breakers, UL489B
4 Contactors
5 Miniature Contactors & Control Relays
6 Overload Relays
7 Direct-On-Line Starters
Contactor + Overload Relay
9 Motor Protection Circuit Breakers
11 Direct-On-Line Starters
Motor Protection Circuit Breaker + Contactor
34 Control Circuit Transformers
37 Control Power Transformers

HUMAN MACHINE INTERFACE

13 30mm Industrial Pilot Devices
14 30mm Pilot Devices for Hazardous Location
15 22mm IEC Pilot Devices
& Compact Control Stations
16 World Tower Lights
17 Cam Switches
18 22mm NEMA Pilot Devices
19 16mm Pilot Lights
20 13mm Pilot Lights

CONTROL LOGIC

22 IEC Terminal Blocks
23 High Density Terminal Blocks
25 Electronic Timing Relays
35 General Purpose Relays, Series 200/210
27 Terminal Block Relays
31 Industrial Power Supplies

28 WIRING/CABLE DUCT

PANEL SOLUTIONS

2 Enclosed Disconnect Switches
8 Enclosed Direct-On-Line Starters
Contactor + Overload Relay
10 Enclosed Motor Protection Circuit Breakers
12 Enclosed Direct-On-Line Starters
Motor Protection Circuit Breaker + Contactor
21 Control Station Enclosures
30 Enclosed UL508A Combination Motor Starters
33 Enclosed Power Supplies
36 VFD Bypass Panels

38 TECHNICAL REFERENCE

39 TERMS & CONDITIONS

EVERYTHING UNDER CONTROL.
THIS IS WHAT YOU EXPECT,
AND IT'S WHAT WE DELIVER.

Competitive pricing, superior quality, and immediate availability.

Quality products that perform to the highest standards, supported by our 36-Month Warranty.

Direct-from-the-manufacturer pricing, guaranteed same-day shipping, and an unwavering commitment to your satisfaction —it's an unbeatable combination.

c3controls.com

REVISION 07.2026

NON-FUSED DISCONNECT SWITCHES

series DS

c3controls offers the most rugged, dependable Disconnect Switches that money can buy. From Panel/Base Mount to Door Mount with switch ratings from 16A - 125A, we've got what you need. And, of course, they're all certified to UL and CSA standards and CE marked for global versatility.

Section 1

Non-Fused Disconnect Switches	4
Accessories	7
Specifications	8
Dimensions	10

PROVEN

Conformity to Standards:
UL 508
CSA C22.2 No. 14
IEC 60947-1, 60947-3

Certifications:
UL File #: E187641 (Guide NLRV, NLRV2, NLRV7, NLRV8)

CE Marked (per EU Low Voltage Directive 2006/95/EC and RoHS Directive 2011/65/EU)

Visit www.c3controls.com to download product certifications.

NOTE: The scope (range, description, price, specifications, dimensions, etc.) of the product featured in this section is subject to change without notice. Refer to www.c3controls.com for product updates.

NON-FUSED DISCONNECT SWITCHES

c3controls offers a comprehensive line of Disconnect Switches, just one of our extensive product lines designed and manufactured to meet the needs of the machine builder. Check out all the features of our Series DS below!

DEPENDABLE, HIGH QUALITY DISCONNECT SWITCHES—ONLY AT C3CONTROLS.	
✓ **Proven**	Our Disconnect Switches are certified to UL Standards and CE marked for global versatility.
✓ **Multiple Installations**	Installations for disconnect switches are available for both door mount and panel/base mount.
✓ **Easy to Install**	Panel/Base mount switches snap-on to 35mm DIN Rail or secure to the panel with two fixing screws, and feature dual terminal markings (1/L1, 3/L2, 5/L3 and 2/T1, 4/T2, 6/T3) for fast and easy wiring.
✓ **Simple Wiring**	Integral captive terminal clamps are shipped in the backed-out position for easy wiring and are plated for corrosion resistance.
✓ **Convenient**	Switches are factory assembled with operating handles for Just-In-Time (JIT) manufacturing and reduced inventory.
✓ **Circuit Isolation**	Disconnect switches include positive drive to open double break contacts to ensure circuit isolation, and feature a 10kA short circuit rating at 600V AC with Class J fuses.
✓ **Heavy-Duty**	Glass filled polyamide thermoplastic housings are ARC track resistant and provide insulation between poles.
✓ **Customization**	Positive, reliable actuation of the switch is ensured through the rigid operating shaft that can be cut to length to fit your enclosure depths.
✓ **Wide Range of Operation**	Wide variety of operating handle styles and colors with Type 1, 2, 3, 3R, 4/4X, 12 and 13, IP55, and IP65 ingress protection ratings for the most demanding industrial environments.
✓ **36-Month Warranty***	Every product is backed by our 36-Month Warranty—giving you confidence in the quality, reliability, and performance of components designed for the most demanding applications.
✓ **Guaranteed Same-Day Shipping***	Product availability reduces inventory, and improves cash-flow—saving you money. With c3controls any order for standard catalog items received by 6:00pm ET is guaranteed to ship same-day.
✓ **Advantage Pricing**	Our approach to product development, manufacturing, and focus on servicing the OEM and Electrical Equipment Builder reduces cost. The result—the best value in the industry.

*See c3controls Terms & Conditions

> *"With c3controls Series DS, service calls have been minimized and I've never had to revert to another supplier due to the fact we couldn't get what we needed on time. I can count on c3controls."*
>
> Dan Hamer, Electrical Engineer • **ESD Waste2Water**

Panel Mount Switch with PHG Handle

Door Mount Switch with DHG Handle

Panel Mount Switch with Integral SMP Handle

Panel Mount Switch with Integral SML Handle

UNIQUE PRODUCT LINE FEATURES

PADLOCKABLE SWITCHES

Operating handles with ON/OFF and international I/O symbols, can be padlocked in the "OFF" position with up to three padlocks for extra safety and the security needed during maintenance activities.

MANUAL MOTOR CONTROLLER

Certified as Manual Motor Controllers Suitable as Motor Disconnects for motors up to 40HP at 480V (55kW at 400V).

ADVANCED SAFETY

Switches include IP20 terminals and a line-side terminal shield is provided as standard on the disconnect switches to guard against accidental contact with live parts.

FLEXIBILITY

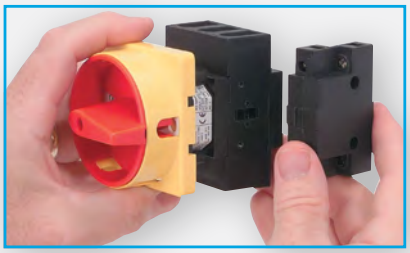

The modular switch design allows up to two modules to be added to a three pole switch, with one module installed on the left side and the other installed on the right.

ADDED SECURITY

Our door interlock allows entry into the enclosure only when the switch is in the OFF position, while our pistol operating handles include a concealed "defeater mechanism" that must be operated with a tool and allows entry when the switch is in the ON position.

FIND IT FAST

Non-Fused Disconnect Switches

- Certifications
- Specifications
- Dimension Drawings
- Installation Instructions
- Easy to Buy

www.c3controls.com

IT'S EASY TO BUILD YOUR OWN DISCONNECT SWITCH

Simply pick the code number from each of the sections below and combine them to build your part number.

Series DS2 Disconnect Switches (Non-Fused)

I	II	III	IV		V	VI	VII
	DS2 –			–			

Example: To build one of our most popular Disconnect Switches, the part number would be I + DS2 + III + IV + V + VI + VII or DDS2-325-DHGRY

I. INSTALLATION

CODE	DESCRIPTION	LIST
D	Door Mount	$34.00
P	Panel/Base Mount	$38.00

II. OPERATOR TYPE

CODE	DESCRIPTION
DS2	Non-Fused Disconnect Switch

III. NUMBER OF POWER POLES

CODE	DESCRIPTION	LIST
3	3 Poles	*
4	4 Poles	*
5	5 Poles	*

*NOTE: Price included with Current Rating. See Chart IV below.

IV. CURRENT RATING

		FOR USE WITH		
CODE	DESCRIPTION	3 POLES	4 POLES	5 POLES
16	16 Amp	$ 0.00	$ 14.00	$ 28.00
25	25 Amp	$ 4.00	$ 18.00	$ 32.00
30	32 Amp	$ 11.00	$ 27.00	$ 43.00
40	40 Amp	$ 23.00	$ 50.00	$ 78.00
60	63 Amp	$ 33.00	$ 63.00	$ 94.00
80	80 Amp	$ 67.00	$135.00	$185.00
100	100 Amp	$ 95.00	$146.00	$198.00
125	125 Amp	$117.00	$171.00	$225.00

V. OPERATING HANDLE TYPE

CODE	DESCRIPTION	FOR CURRENT RATING CODES	LIST
	DOOR MOUNT HANDLES FOR DOOR MOUNT SWITCHES		
MDHG	Padlockable Lever (IP55)	16	$ 13.00
MSDHG	Padlockable Lever - Single Hole (22.5mm) Mounting (IP55)	16	$ 13.00
DHM	Round (Type 1, 2, 3, 3R, 4/4X, 12, 13, and IP65)	25 ~ 60	$ 43.00
DHG	Round (Type 1, 2, 3, 3R, 4/4X, 12, 13, and IP65)	25 ~ 125	$ 15.00
	DOOR MOUNT HANDLES FOR PANEL/BASE MOUNT SWITCHES		
MPHG	Padlockable Lever (IP65)	16	$ 13.00
PHM	Round (Type 1, 2, 3, 3R, 4/4X, 12, 13, and IP65)	25 ~ 125	$ 43.00
PHG	Round (Type 1, 2, 3, 3R, 4/4X, 12, 13, and IP65)	25 ~ 125	$ 15.00
SPH	Short Pistol (IP65)	25 ~ 125	$ 56.00
LPH	Long Pistol (IP65)	80 ~ 125	$ 70.00
	INTEGRAL HANDLES FOR PANEL/BASE MOUNT SWITCHES		
SML	Lever (IP30)	25 ~ 60	$ 11.50
SMP	Padlockable Lever (IP30)	25 ~ 60	$ 13.00

VI. OPERATING HANDLE COLOR

CODE	OPERATOR COLOR	BEZEL COLOR	FOR OPERATOR TYPE CODE
RY	Red	Yellow	DHM, DHG, PHM, PHG, MDHG, MSDHG, MPHG, SMP
GB	Grey	Black	DHM, PHM
BB	Black	Black	DHM, PHM
BG	Black	Grey	DHM, DHG, PHM, PHG, MDHG, MSDHG, MPHG
BA	Black	Aluminum	SML
BN	Black	—	SPH, LPH

VII. OPERATING SHAFT LENGTH

CODE	DESCRIPTION	FOR CURRENT RATING CODES	LIST
(Blank)	Door Mount and Panel/Base Mount Switch with Integral Operating Handle	—	—
06	150mm (5-57/64") Operating Shaft for Panel/Base Mount Switch	16	$ 6.30
11	283mm (11") Operating Shaft for Panel/Base Mount Switch	25 ~ 125	$ 8.10

DISCOUNT SCHEDULE G

Panel Mount Disconnect Switch with PHG Handle

Door Mount Disconnect Switch with DHG Handle

Panel Mount Disconnect Switch with Integral SMP Handle

Panel Mount Disconnect Switch with Integral SML Handle

Series DS2 Non-Fused Disconnect Switches

Our Series DS2 Non-Fused Disconnect Switches provide superior performance in rugged applications and are certified as Manual Motor Controllers Suitable as Motor Disconnects for motors up to 40HP at 480V (55kW at 400V). Panel/Base and door mounting options allow switches to be installed in virtually any enclosure.

Panel/Base mount switches are simple to install:

- Snap-on to a 35mm DIN rail.
- Secure to the panel with two (2) fixing screws.
- Dual terminal markings (1/L1, 3/L2, 5/L3 and 2/T1, 4/T2, 6/T3) for fast and easy wiring.

Compact size with robust design features for the most demanding disconnecting applications.

1. 10kA short circuit rating at 600V AC with Class J fuses.
2. Positive drive to open double break contacts to ensure circuit isolation.
3. Compact space saving design for reduced size control panels. 16A switch is only 43mm (1-11/16") wide and our 25A ~ 63A switches are only 50mm (1-31/32") wide.
4. Wide variety of operating handle styles and colors with Type 1, 2, 3, 3R, 4/4X, 12 and 13, IP55, and IP65 ingress protection ratings for the most demanding industrial environments.
5. Glass filled polyamide thermoplastic housings are ARC track resistant and provide insulation between poles.
6. Rugged steel collar rigidly secures the operating shaft in the switch on Panel/Base mounted switches.
7. Line side terminal shield (provided as standard) and IP20 terminals guard against accidental contact with live parts.
8. Integral captive terminal clamps are shipped in the backed-out position for easy wiring and are plated for corrosion resistance.
9. Auxiliary contacts, power poles, and neutral poles install on the left or right side of the switch.
10. Complete assembled switches with operating handles are available for Just-In-Time (JIT) manufacturing and reduced inventory.

Some of Our Popular Configurations:

SERIES DS2 NON-FUSED DISCONNECT SWITCHES

CATALOG NUMBER	DESCRIPTION	LIST
DDS2-316-MDHGRY	16A Door Mount Disconnect Switch w/3 Poles and Lever Red/Yellow Handle	$47.00
DDS2-325-DHGRY	25A Door Mount Disconnect Switch w/3 Poles and Round Red/Yellow Handle	$53.00
DDS2-330-DHGRY	32A Door Mount Disconnect Switch w/3 Poles and Round Red/Yellow Handle	$60.00
DDS2-340-DHGRY	40A Door Mount Disconnect Switch w/3 Poles and Round Red/Yellow Handle	$72.00
PDS2-316-MPHGRY06	16A Panel Mount Disconnect Switch w/3 Poles and Lever Red/Yellow Handle	$57.30
PDS2-325-PHGRY11	25A Panel Mount Disconnect Switch w/3 Poles and Round Red/Yellow Handle	$65.10
PDS2-330-PHGRY11	32A Panel Mount Disconnect Switch w/3 Poles and Round Red/Yellow Handle	$72.10
PDS2-340-PHGRY11	40A Panel Mount Disconnect Switch w/3 Poles and Round Red/Yellow Handle	$84.10
PDS2-325-SMLBA	25A Panel Mount Disconnect Switch w/3 Poles and Integral Black/Aluminum Lever Handle	$53.50
PDS2-325-SMPRY	25A Panel Mount Disconnect Switch w/3 Poles and Integral Red/Yellow Padlockable Lever Handle	$55.00
PDS2-330-SMLBA	32A Panel Mount Disconnect Switch w/3 Poles and Integral Black/Aluminum Lever Handle	$60.50

Series DS2 Non-Fused Operating Handles

c3controls Series DS2 non-fused disconnect switch operating handles are available in a wide variety of styles, colors, and ingress protection ratings — perfect for any application from light duty to severe industrial environments. External operating handles are easy to install in standard 4-hole panel drilling layouts. A single hole (22.5mm) operating handle is also available for 16A switches. Operating handles can be installed in enclosures with door thicknesses up to 6mm (5/64") depending on handle type, see pages 10-14.

UNIQUE PRODUCT FEATURES

Easy to install, stylish operating handles provide reliable actuation in disconnecting applications and can be locked off for extra safety.

1. Handles can be padlocked OFF with up to three padlocks to meet global installation codes and standards requirements.
2. Operating handles with ON/OFF and I/O markings.
3. Door interlock — can only be opened in the OFF position.
4. Positive, reliable actuation of the switch is ensured through the rigid operating shaft that can be cut to length for enclosure depths up to 204mm (8") for 16A switches and up to 355mm (13-63/64") for 25A ~ 63A switches and 456.5mm (17-63/64") for 80A ~ 125A switches.
5. Pistol operating handles include a concealed "defeater mechanism" that must be operated with a tool. Allows entry into the enclosure with the switch in the ON position.

DHG/PHG Door/Panel Mount Round Operating Handle
(Type 1, 2, 3, 3R, 4/4X, 12, 13, and IP65)

DHM/PHM Door/Panel Mount Operating Handle
(Type 1, 2, 3, 3R, 4/4X, 12, 13, and IP65)

SMP Panel Mount Integral Padlockable Lever Operating Handle
(IP30)

SPH/LPH Panel Mount Pistol Operating Handle
(IP65)

SML Panel Mount Integral Lever Operating Handle
(IP30)

MDHG/MSDHG/MPHG Door/Panel Mount Lever Operating Handle
(MDHG & MSDHG: IP55) (MPHG: IP65)

SPECIAL FEATURES

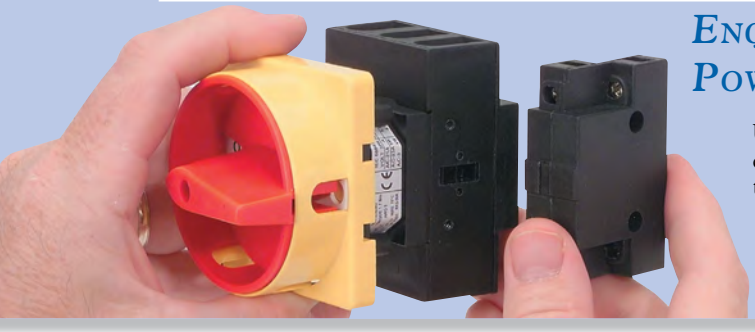

Engineered to add Auxiliary Contacts, Power Poles, and Neutral Poles Easily!

Up to two modules (Auxiliary Contacts, Power Poles, and Neutral Poles) can be added to a three pole switch. One module can be installed on the left side and right side of the switch.

NEUTRAL POLE MODULES

Normally open early make (NOEM) configuration. IP20 terminals guard against accidental contact with live parts.

DOOR MOUNT		
CODE	**CURRENT RATING CODE**	**LIST**
DNA216	16	$17.00
DNA225	25	$17.00
DNA230	30	$19.50
DNA240	40	$21.00
DNA260	60	$23.00
DNA280	80	$27.00
DNA2100	100	$28.00
DNA2125	125	$29.00

PANEL MOUNT		
CODE	**CURRENT RATING CODE**	**LIST**
PDNA216	16	$17.00
PDNA225	25	$17.00
PDNA230	30	$19.50
PDNA240	40	$21.00
PDNA260	60	$23.00
PDNA280	80	$27.00
PDNA2100	100	$28.00
PDNA2125	125	$29.00

POWER POLE MODULES

Normally open (NO) configuration. IP20 terminals guard against accidental contact with live parts. Electrical ratings are equivalent to the associated switch rating (refer to specifications on page 8).

DOOR MOUNT		
CODE	**CURRENT RATING CODE**	**LIST**
DPA216	16	$17.00
DPA225	25	$17.00
DPA230	30	$19.50
DPA240	40	$21.00
DPA260	60	$23.00
DPA280	80	$27.00
DPA2100	100	$28.00
DPA2125	125	$29.00

PANEL MOUNT		
CODE	**CURRENT RATING CODE**	**LIST**
PDPA216	16	$17.00
PDPA225	25	$17.00
PDPA230	30	$19.50
PDPA240	40	$21.00
PDPA260	60	$23.00
PDPA280	80	$27.00
PDPA2100	100	$28.00
PDPA2125	125	$29.00

AUXILIARY CONTACT MODULES

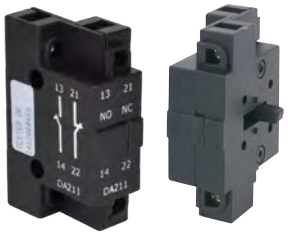

1 normally open early make (NOEM) and 1 normally closed (NC) contact configuration. IP20 terminals guard against accidental contact with live parts. Auxiliary contacts can be installed on switches rated 16A to 125A, reducing inventory requirements.

Ratings: AC-15: 6A at ≤240V AC
4A at 240V AC to 480V AC
Continuous Thermal Current: 15A

DOOR MOUNT		
CODE	**CURRENT RATING CODE**	**LIST**
D16A211	16	$27.00
DA211	25 ~ 60	$27.00
D125A211	80 ~ 125	$27.00

PANEL MOUNT		
CODE	**CURRENT RATING CODE**	**LIST**
PA16DA211	16	$27.00
PADA211	25 ~ 60	$27.00
PA125DA211	80 ~ 125	$27.00

TERMINAL SHIELDS

Terminal shields can be installed on the line or load side of the disconnect switch to provide extra protection and guard against accidental contact with live parts.

CODE	CURRENT RATING CODE	LIST
DS2TS20	16	$ 5.00
DS2TS60	25 ~ 60	$ 5.00
DS2TS125	80 ~ 125	$10.00

DISCOUNT SCHEDULE G

Specifications:

SERIES DS2 NON-FUSED DISCONNECT SWITCH SPECIFICATIONS									
		SWITCH CURRENT RATING CODE							
		16	25	30	40	60	80	100	125
ELECTRICAL UL/CSA APPLICATIONS									
	UNITS								
Rated Operating Voltage, Ue	VAC	600							
Rated Operating Current, Ie	A	16	25	32	40	63	80	100	125
RATED 3-PHASE POWER, Pe									
@ 240V AC	HP	3	7.5	7.5	10	15	20	20	30
@ 480V AC	HP	7.5	15	20	20	25	30	30	40
@ 600V AC	HP	10	20	25	30	30	40	40	50
RATED SINGLE PHASE POWER, Pe									
@ 120V AC	HP	0.5	1.5	2	3	3	3	3	3
@ 240V AC	HP	1.5	2	3	5	7.5	7.5	7.5	7.5
SHORT CIRCUIT RATINGS @ 600V AC									
With Class J Fuses	kA	10	10	10	10	10	10	10	10
Maximum Fuse Size	A	20	45	45	70	70	125	125	125
ELECTRICAL IEC APPLICATIONS									
Rated Insulation Voltage, Ui	VAC	750							
Rated Impulse Voltage, Uimp	kV	6							
Rated Operating Voltage, Ue	VAC	690							
RATED OPERATING CURRENT, Ie									
AC-22A	A	16	25	32	40	63	80	100	125
AC-1	A	20	32	40	63	80	80	100	125
RATED 3-PHASE POWER, AC-23A, Pe									
@ 220 ~ 240V AC	kW	7.5	11	15	22	30	37	44	60
@ 380 ~ 440V AC	kW	15	22	22	45	45	90	90	90
@ 500 ~ 690V AC	kW	15	22	22	45	45	90	90	90
RATED 3-PHASE POWER, AC-3, Pe									
@ 220 ~ 240V AC	kW	4	8	11	15	22	30	37	44
@ 380 ~ 440V AC	kW	5.5	15	15	30	30	55	55	55
@ 500 ~ 690V AC	kW	11	15	15	30	30	55	55	55
SHORT CIRCUIT RATINGS									
With Type gG Fuses	kA	5	30	30	30	30	30	30	30
Maximum Fuse Size	A	20	32	32	63	63	125	125	125
MECHANICAL									
Operating Torque (Door Mount)	Nm	0.45	0.8	0.8	0.8	0.8	①	①	①
	Lb-in.	4.0	7	7	7	7	①	①	①
Operating Torque (Panel Mount)	Nm	0.45	1.0	1.0	1.0	1.0	1.6	1.6	1.6
	Lb-in.	4.0	9	9	9	9	14	14	14
ENVIRONMENTAL									
Ambient Operating Temperature	°C/°F	-25 to 55 / -13 to 131							
Altitude	m/ft.	2,000/6,528							
Ingress Protection									
Switch Body	IP	20							
Operating Handles	—	For detailed specifications by operating handle, see page 9.							
CONSTRUCTION									
CONDUCTOR SIZE									
UL/CSA	AWG	1 x 18 ~ 12, 2 x 18 ~ 12	1 x 18 ~ 10, 2 x 18 ~ 12		1 x 12 ~ 6, 2 x 12 ~ 8		1 x 10 ~ 1, 2 x 10 ~ 4		
Solid/Multi-strand	mm^2	1 ~ 4	2.5 ~ 10	2.5 ~ 10	6 ~ 25	6 ~ 25	2.5 ~ 50	2.5 ~ 50	2.5 ~ 50
Fine strand with sleeve	mm^2	0.5 ~ 6	0.75 ~ 6	0.75 ~ 6	2.5 ~ 10	2.5 ~ 10	4 ~ 50	4 ~ 50	4 ~ 50
Terminal Torque	Nm	0.8	1.7	1.7	2	2	2.5	2.5	2.5
	Lb-in.	7.1	15	15	17.7	17.7	22	22	22
Recommended Wire Strip Length	mm	10	10	12	12	12	15	15	15
	in.	3/8	3/8	1/2	1/2	1/2	5/8	5/8	5/8
ROHS COMPLIANCE		For RoHS compliance documentation by product, refer to www.c3controls.com							

① Consult factory

Specifications:

SERIES DS2 NON-FUSED DISCONNECT SWITCHES – OPERATING HANDLES		
ENVIRONMENTAL		
	UNITS	
DHG / PHG HANDLE		
Handle Type		Round
Installation		Door/Panel Mount
Padlock Provision		3
Ingress Protection Rating	—	Type 1, 2, 3, 3R, 4/4X, 12, 13 and IP65
DHM / PHM HANDLE		
Handle Type		Round
Installation		Door/Panel Mount
Padlock Provision		3
Ingress Protection Rating	—	Type 1, 2, 3, 3R, 4/4X, 12, 13 and IP65
SMP HANDLE		
Handle Type		Padlockable Lever
Installation		Integral Panel Mount
Padlock Provision		1
Ingress Protection Rating	IP	30
SPH / LPH HANDLE*		
Handle Type		Pistol
Installation		Panel Mount
Padlock Provision		3
Ingress Protection Rating	IP	65
SML HANDLE		
Handle Type		Lever
Installation		Integral Panel Mount
Padlock Provision		0
Ingress Protection Rating	IP	30
MDHG / MSDHG / MPHG HANDLE		
Handle Type		Padlockable Lever
Installation		Door/Panel Mount
Padlock Provision		1
Ingress Protection Rating	IP	MDHG & MSDHG: 55 MPHG: 65

*NOTE: Includes concealed defeater mechanism.

DHG/PHG

DHM/PHM

SMP

SPH/LPH

SML

MDHG/MSDHG/ MPHG

DOOR MOUNTED DISCONNECT SWITCH WITH MDHG OPERATING HANDLE

16A Switches

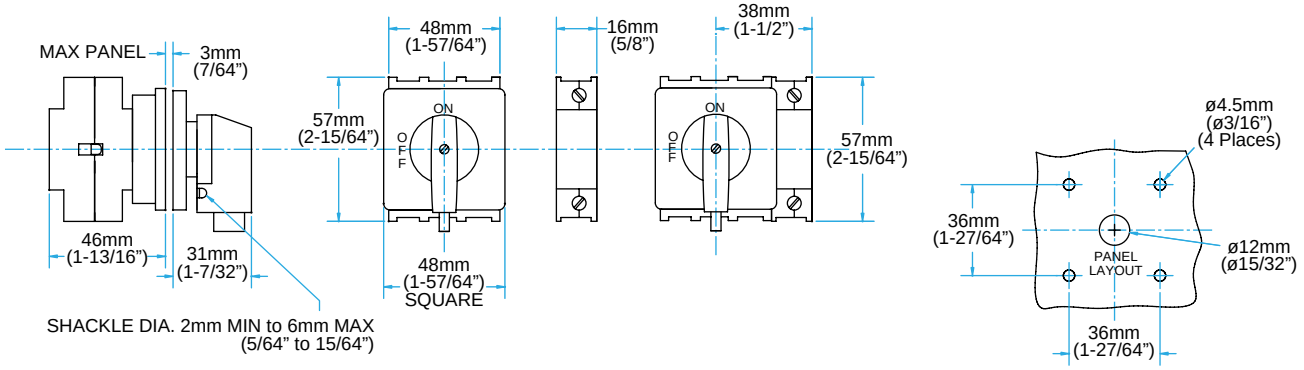

DOOR MOUNTED DISCONNECT SWITCH WITH MSDHG OPERATING HANDLE

16A Switches

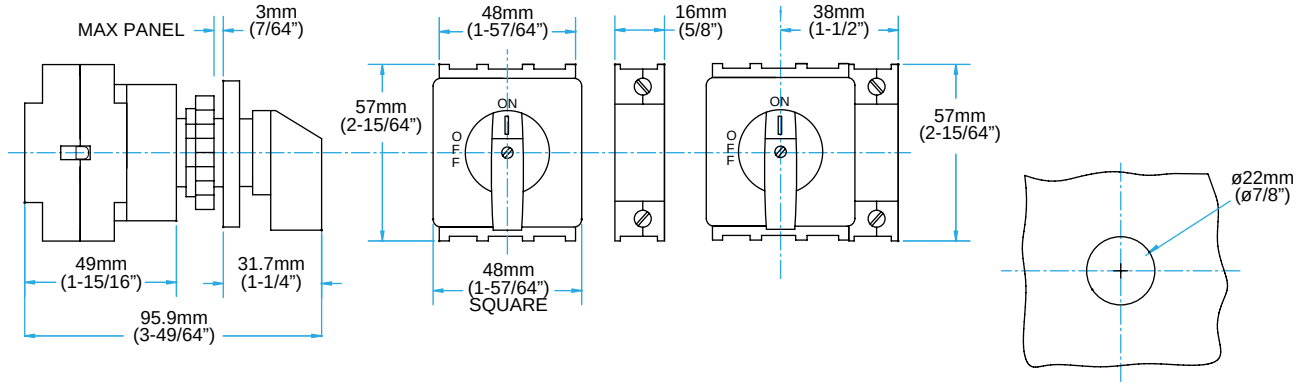

PANEL MOUNTED DISCONNECT SWITCH WITH MPHG OPERATING HANDLE

16A Switches

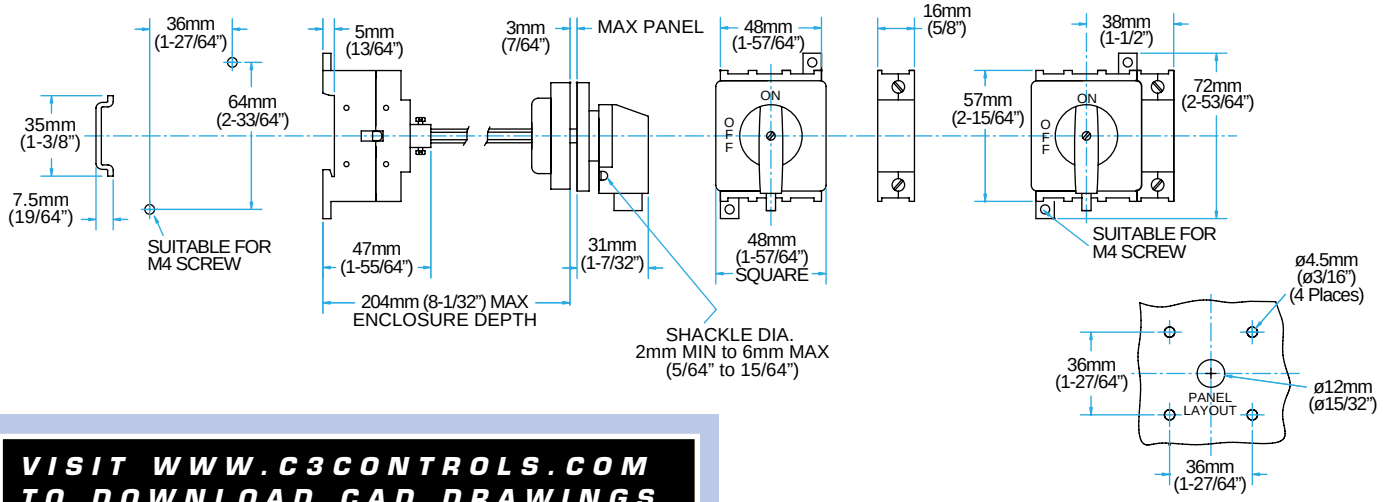

VISIT WWW.C3CONTROLS.COM TO DOWNLOAD CAD DRAWINGS

DOOR MOUNTED DISCONNECT SWITCH WITH DHM OPERATING HANDLE

25A - 63A Switches

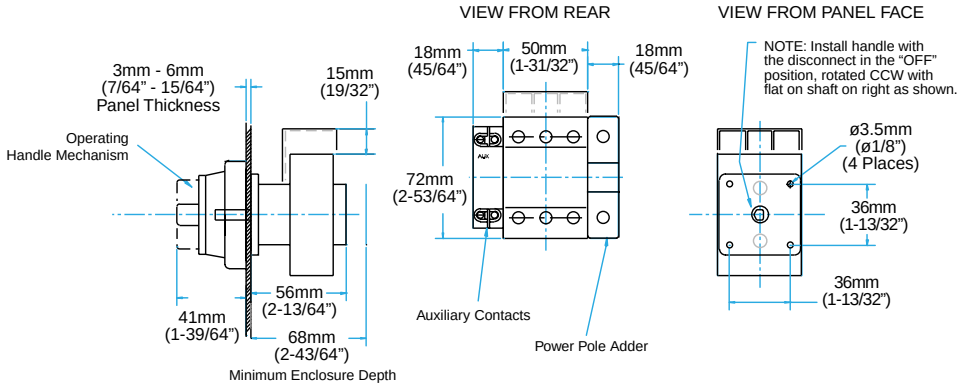

DHM Operating handle Mounting Hole Pattern

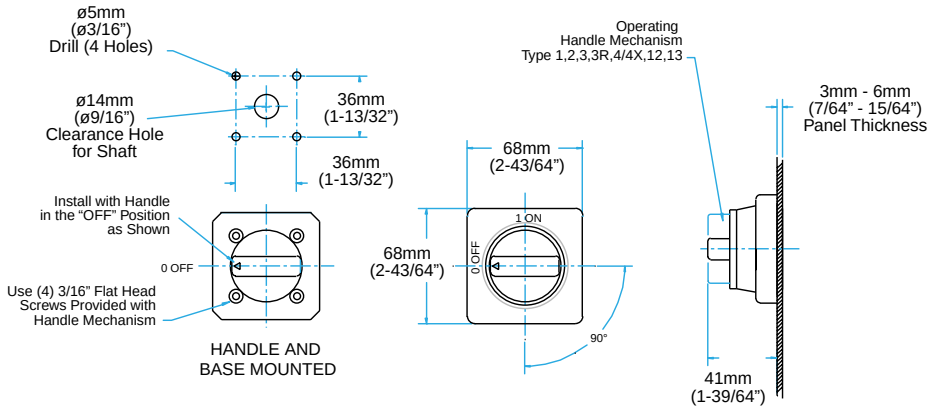

DOOR MOUNTED DISCONNECT SWITCH WITH DHG OPERATING HANDLE

25A - 63A Switches

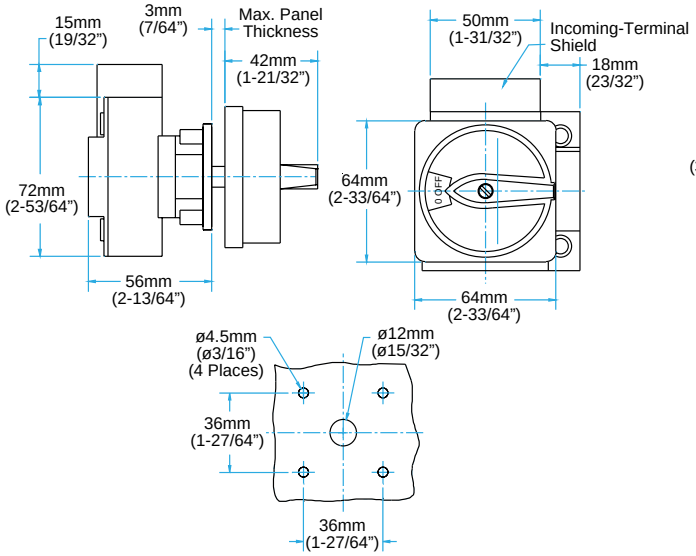

80A - 125A Switches

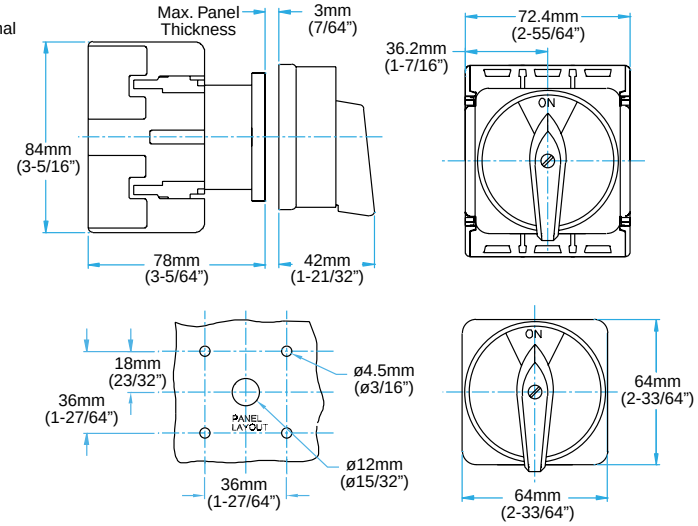

PANEL MOUNTED DISCONNECT SWITCHES WITH PHM OPERATING HANDLES

25A - 63A Switches

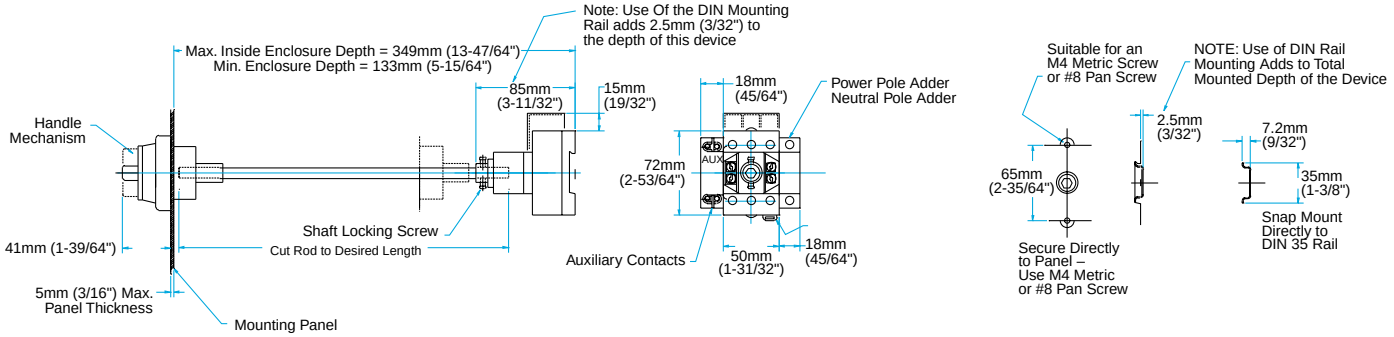

80A - 125A Switches

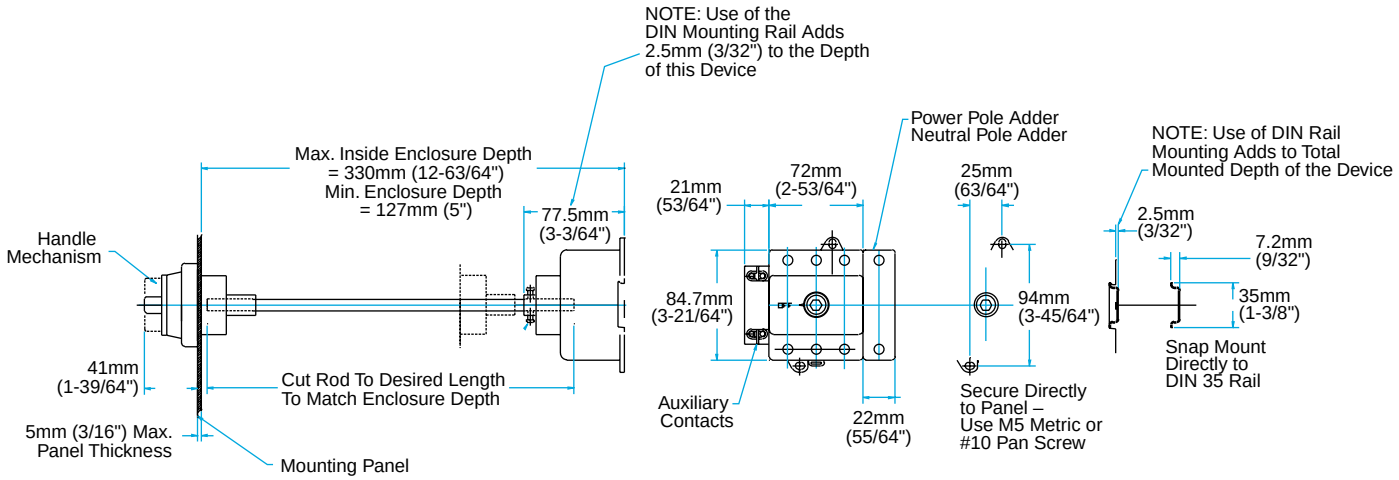

PHM Operating Handle Mounting Hole Pattern

For 25A-63A and 80A-125A Switches

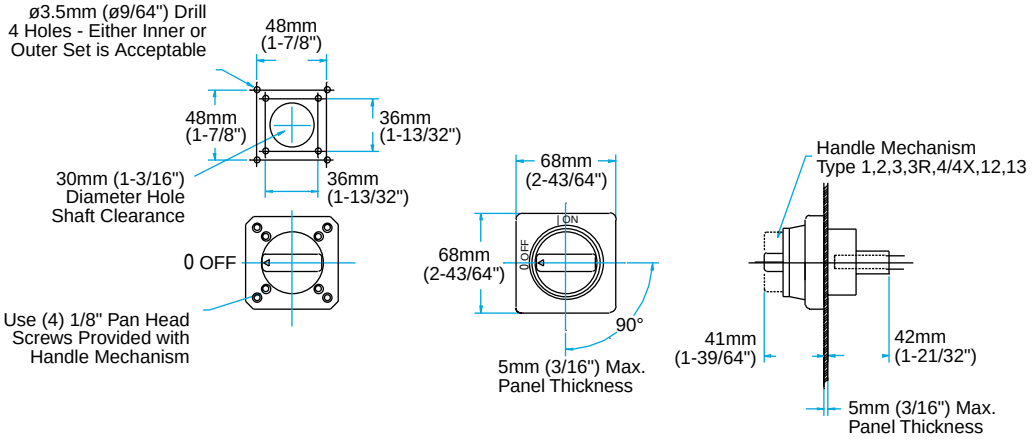

PANEL MOUNTED DISCONNECT SWITCHES WITH PHG OPERATING HANDLES

25A - 63A Switches

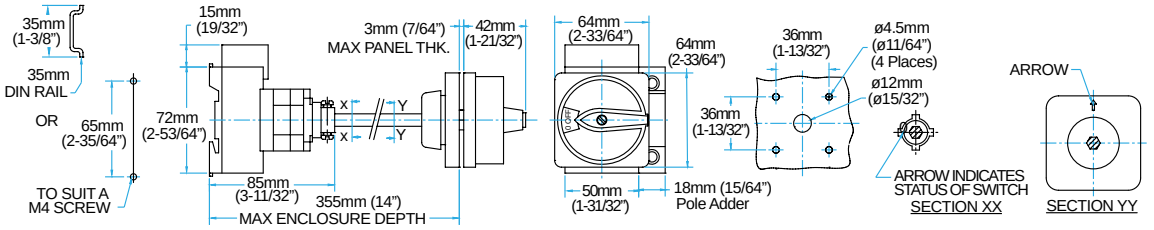

80A - 125A Switches

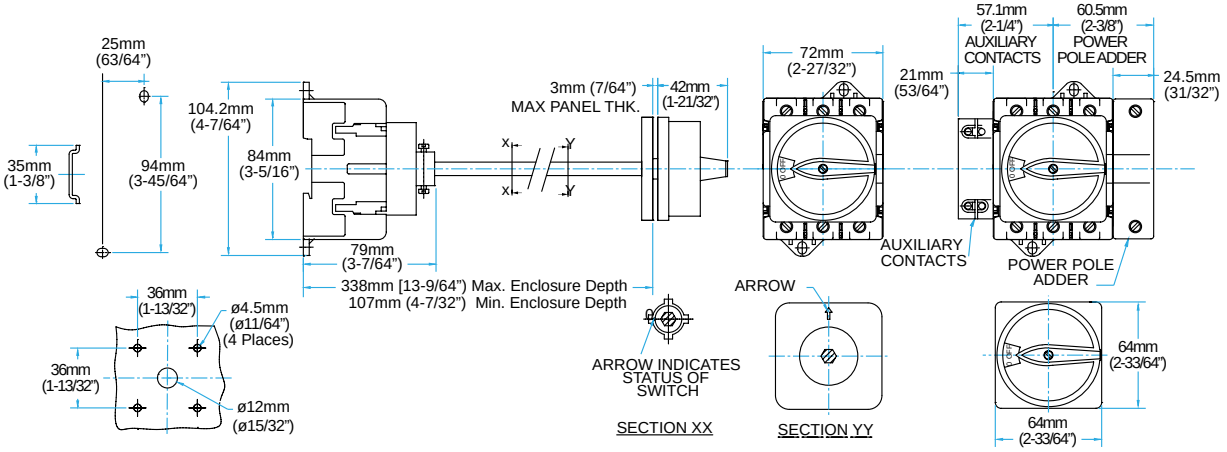

PANEL MOUNTED DISCONNECT SWITCH WITH SPH OPERATING HANDLE

25A - 63A Switches

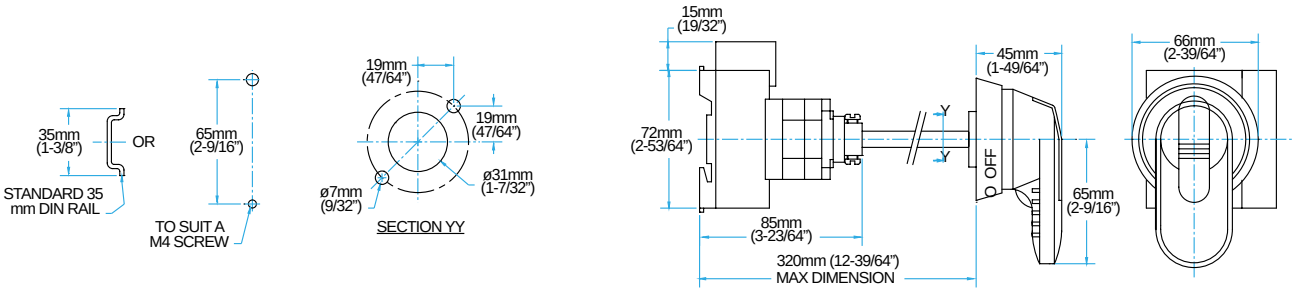

PANEL MOUNTED DISCONNECT SWITCH WITH LPH OPERATING HANDLE

80A - 125A Switches

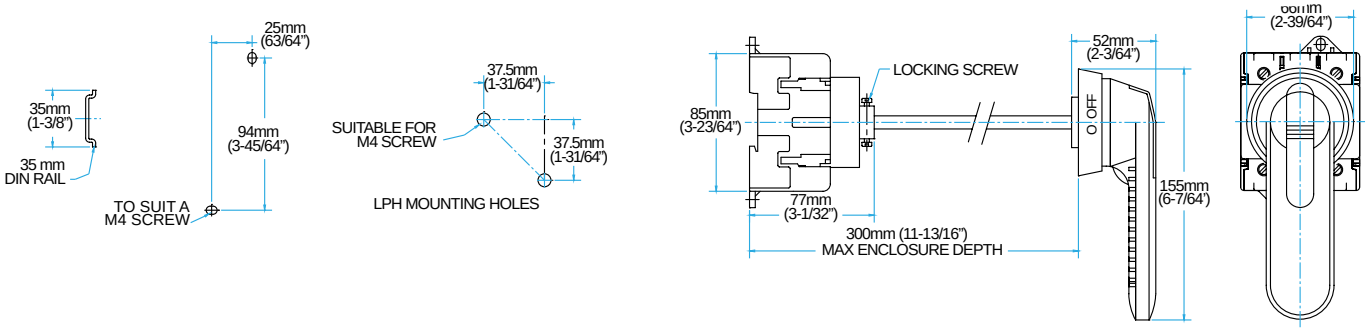

PANEL MOUNTED DISCONNECT SWITCH WITH SML OPERATING HANDLE

25A - 63A Switches

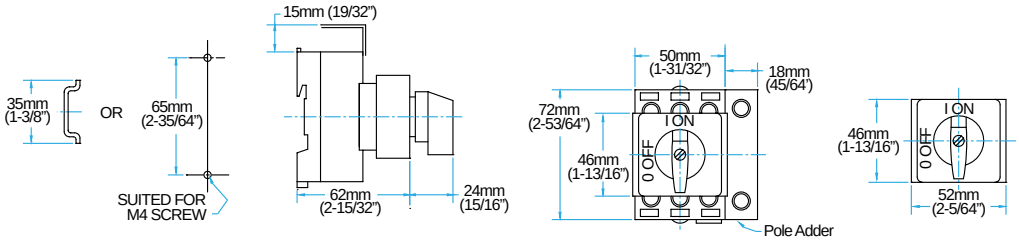

ENCLOSED DISCONNECT SWITCHES

When you need an at-motor non-fused disconnect switch with superior performance, look to c3controls. Our Series EDS2 Enclosed Disconnects feature 3- and 4-Pole disconnect switches in ABS Plastic, Carbon Steel and Polycarbonate enclosures with padlocking operating handles to take on your most demanding application requirements.

Section 2

Enclosed Non-Fused Disconnect Switches	4
Accessories	6
Specifications	7
Dimensions	8

PROVEN

Conformity to Standards:

DISCONNECT SWITCHES

UL 508

CSA C22.2 No. 14

IEC 60947-1, 60947-3

ENCLOSURES

UL 50

CSA C22.2 No. 94

IEC 60529

Certifications:

UL File #: E187641 (Guide NLRV, NLRV2, NLRV7, NLRV8)

CE Marked (per EU Low Voltage Directive 2006/95/EC and RoHS Directive 2011/65/EU)

UL Listed

CSA Certified

Visit www.c3controls.com to download product certifications.

NOTE: The scope (range, description, price, specifications, dimensions, etc.) of the product featured in this section is subject to change without notice. Refer to www.c3controls.com for product updates.

ENCLOSED DISCONNECT SWITCHES

Within our extensive product portfolio is our line of Enclosed Disconnect Switches, just one example of our superior product quality. Every one of our products is designed and manufactured to the needs of the machine builder. Check out all the features of our Series EDS2 below!

MANUFACTURING THE MOST RELIABLE AND HEAVY-DUTY ENCLOSED DISCONNECT SWITCHES.	
✓ **Proven**	Enclosures are UL Listed and CSA certified and our Disconnect Switches are certified to UL and CSA Standards and CE marked for global versatility.
✓ **Convenience**	Single catalog number, no assembly required, shorter control panel Bill of Materials, and easier inventory management.
✓ **Reduced Inventory**	Switches are factory assembled with operating handles for Just-In-Time (JIT) manufacturing and reduced inventory.
✓ **Circuit Isolation**	Disconnect switches include positive drive to open double break contacts to ensure circuit isolation, and feature a 10kA short circuit rating at 600V AC with Class J and Class CC fuses.
✓ **Heavy-Duty**	Glass filled polyamide thermoplastic housings are ARC track resistant and provide insulation between poles.
✓ **Wide Range of Operation**	Wide variety of operating handle styles and colors with Type 1, 2, 3, 3R, 4/4X, 12, 13 and IP65 ingress protection ratings for the most demanding industrial environments.
✓ **Durable Materials**	A variety of compact, lift-off cover ABS Plastic, Polycarbonate and Carbon Steel enclosures with Type 1, 4X, 12, 13 and IP65 ratings for the most demanding applications.
✓ **36-Month Warranty***	Every product is backed by our 36-Month Warranty—giving you confidence in the quality, reliability, and performance of components designed for the most demanding applications.
✓ **Guaranteed Same-Day Shipping***	Product availability reduces inventory, and improves cash-flow—saving you money. With c3controls any order for standard catalog items received by 6:00pm ET is guaranteed to ship same-day.
✓ **Advantage Pricing**	Our approach to product development, manufacturing, and focus on servicing the OEM and Electrical Equipment Builder reduces cost. The result—the best value in the industry.

*See c3controls Terms & Conditions

> *With only one part number and no need for assembly upon delivery, the ordering and installation processes are much smoother with c3controls disconnect switches.*
>
> Mike Jones, Engineer • **Basic Controls Inc.**

ABS Plastic

Polycarbonate

Carbon Steel

UNIQUE PRODUCT LINE FEATURES

PADLOCKABLE SWITCHES

Operating handles with ON/OFF and international I/O symbols, can be padlocked in the "OFF" position with up to three padlocks for extra safety and the security needed during maintenance activities.

MANUAL MOTOR CONTROLLER

Certified as Manual Motor Controllers Suitable as Motor Disconnects for motors up to 25HP at 480V (30kW at 400V).

FLEXIBILITY

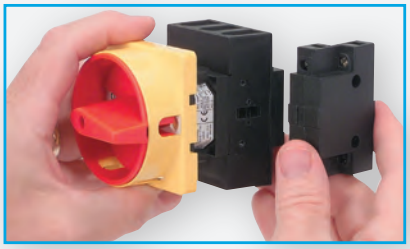

The modular switch design allows up to two modules to be added to a three pole switch, with one module installed on the left side and the other installed on the right side.

ADVANCED SAFETY

Switches include IP20 terminals and a line-side terminal shield is provided as standard on the disconnect switches to guard against accidental contact with live parts.

FIND IT FAST

Enclosed Disconnect Switches

- Certifications
- Specifications
- Dimension Drawings
- Installation Instructions
- Easy to Buy

www.c3controls.com

IT'S EASY TO BUILD YOUR OWN ENCLOSED DISCONNECT

Simply pick the code number from each of the sections below and combine them to build your part number.

Series EDS2 Enclosed Disconnect Switches (Non-Fused)

EDS2 – ____ – ____ – ____ ____ – ____
I II III IV V VI

Example: To build one of our most popular Enclosed Disconnects, the part number would be **EDS2 + II + III + IV + V + VI**
or **EDS2-330-PC-GRY-A11**

I. OPERATOR TYPE

CODE	DESCRIPTION	LIST
EDS2	Enclosed IEC Non-Fused Disconnect Switch	$ 12.00

II. SWITCH CODE - # OF POLES & DISCONNECT SWITCH RATING

			RATINGS FOR SWITCHING AC MOTORS / HP (60HZ)					
			1 PHASE		3 PHASE			
CODE	NUMBER OF POLES	CURRENT RATING (A)	120V	240V	240V	480V	600V	LIST
316	3	16	1/2	1-1/2	3	7-1/2	10	$ 38.00
416	4							$ 52.00
325	3	25	1-1/2	2	7-1/2	15	20	$ 42.00
425	4							$ 56.00
330	3	32	2	3	7-1/2	20	25	$ 49.00
430	4							$ 65.00
340	3	40	3	5	10	20	30	$ 61.00
440	4							$ 88.00
360	3	63	3	7-1/2	15	25	30	$ 71.00
460	4							$101.00

III. ENCLOSURE TYPE

CODE	MATERIAL	FOR SWITCH CODES	DIMENSION REF.	CAT. NO.	LIST
ABS	ABS Plastic (IP65)	316, 416	1	ABSDSEN1	$ 32.00
		325, 425, 330, 430	2	ABSDSEN2	$ 32.00
		340, 440, 360, 460	3	ABSDSEN3	$ 44.00
CS	Carbon Steel (Type 12, 13 & IP65)	325, 425, 330, 430, 340, 440, 360, 460	4	CSDSEN45	$156.00
PC	Polycarbonate (Type 4X & IP65)	325, 330, 340, 360	6	PCDSEN	$ 56.00
		425, 430, 440, 460	7	PCDSEN45	$ 90.00

IV. OPERATING HANDLE TYPE

CODE	FOR SWITCH CODES	DESCRIPTION	LIST
		ABS ENCLOSURES	
L	316, 416	Lever (IP65)	$ 13.00
G	325, 425, 330, 430, 340, 440, 360, 460	Round (Type 1, 2, 3, 3R, 4/4X, 12, 13 & IP65)	$ 15.00
		CARBON STEEL ENCLOSURES	
M	325, 425, 330, 430, 340, 440, 360, 460	Round (Type 1, 2, 3, 3R, 4/4X, 12, 13 & IP65)	$ 43.00
G	325, 425, 330, 430, 340, 440, 360, 460	Round (Type 1, 2, 3, 3R, 4/4X, 12, 13 & IP65)	$ 15.00
		POLYCARBONATE ENCLOSURES	
M	325, 330, 340, 360, 425, 430, 440, 460	Round (Type 1, 2, 3, 3R, 4/4X, 12, 13 & IP65)	$ 43.00
G	325, 330, 340, 360, 425, 430, 440, 460	Round (Type 1, 2, 3, 3R, 4/4X, 12, 13 & IP65)	$ 15.00

V. OPERATING HANDLE COLOR

CODE	OPERATOR COLOR	BEZEL COLOR	FOR OPERATOR TYPE CODE
RY	Red	Yellow	L, M, G
BG	Black	Grey	L, M, G

VI. OPTIONS

CODE	FOR ENCLOSURE DIMENSION REFERENCE/SWITCH CODE (*)	DESCRIPTION	LIST
(Blank)	All Switch Codes	No Option Needed	—
A11	1/316 2/325, 2/330 3/340, 3/440, 3/360, 3/460 4/All Switch Codes 6/No Applicable Switch Codes 7/425, 7/430, 7/440, 7/460	Auxiliary Contact Module 1NOEM and 1NC	$ 27.00

*EXAMPLE: 2/330 represents enclosure dimension reference 2 and switch code 330.

DISCOUNT SCHEDULE **H**

ABS Plastic

Polycarbonate

Carbon Steel

Handle Type M

Handle Type G

Handle Type L

Enclosed Non-fused Disconnect Switches

Our Series EDS2 Enclosed Non-Fused Disconnect Switches provide superior performance in the most severe industrial environments and are certified as Manual Motor Controllers Suitable as Motor Disconnects for motors up to 25HP at 480V (30kW at 400V).

Product features include:

- 10kA short circuit rating at 600V AC with Class J fuses.
- Positive drive to open double break contacts ensure circuit isolation.

Compact size with robust design features for the most demanding disconnecting applications.

1. A variety of compact, lift-off cover ABS Plastic, Polycarbonate and Carbon Steel enclosures with Type 1, 4X, 12, 13 and IP65 ratings for the most demanding applications - including wash-downs and corrosive environments.
2. Red/Yellow or Black/Grey Operating Handles that can be padlocked in the "OFF" position with up to three padlocks for extra safety and the security needed during maintenance activities.
3. The modular switch design allows three and four pole switches and auxiliary contacts to be specified for application flexibility.
4. Switches include IP20 terminals. A line-side terminal shield is provided as standard on the disconnect switches to guard against accidental contact with live parts.
5. ABS Plastic enclosed disconnect switches feature panel/base mount switches for ultimate ease of wiring.

Some of Our Popular Configurations:

SERIES EDS2 ENCLOSED NON-FUSED DISCONNECT SWITCHES

	RATINGS FOR SWITCHING AC MOTORS HP (60HZ)											
	1 PHASE		3 PHASE									
CURRENT RATING (A)	120V	240V	240V	480V	600V	NUMBER OF POLES	OPERATING HANDLE TYPE	OPERATING HANDLE COLOR	ENCLOSURE TYPE	DIMENSION REFERENCE	CAT. NO.	LIST
16	1/2	1-1/2	3	7-1/2	10	3	Lever	Red/Yellow	ABS	1	EDS2-316-ABS-LRY	$ 95.00
25	1-1/2	2	7-1/2	15	20	3	Round	Red//Yellow	ABS	2	EDS2-325-ABS-GRY	$101.00
									CS	4	EDS2-325-CS-GRY	$225.00
									PC	6	EDS2-325-PC-GRY	$125.00
32	2	3	7-1/2	20	25	3	Round	Red//Yellow	ABS	2	EDS2-330-ABS-GRY	$108.00
									CS	4	EDS2-330-CS-GRY	$232.00
									PC	6	EDS2-330-PC-GRY	$132.00
40	3	5	10	20	30	3	Round	Red//Yellow	ABS	3	EDS2-340-ABS-GRY	$132.00
									CS	4	EDS2-340-CS-GRY	$244.00
									PC	6	EDS2-340-PC-GRY	$144.00
63	3	7-1/2	15	25	30	3	Round	Red//Yellow	ABS	3	EDS2-360-ABS-GRY	$142.00
									CS	4	EDS2-360-CS-GRY	$254.00
									PC	6	EDS2-360-PC-GRY	$154.00

SPECIAL FEATURES

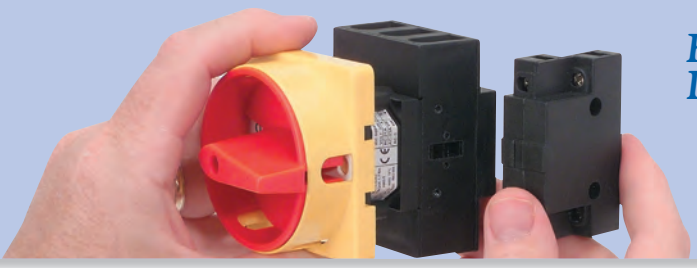

Engineered to add Auxiliary Contacts, Power Poles, and Neutral Poles Easily!

A variety of modular accessories can be installed in the field on most disconnect switches. Installation is easy, modules can be installed on the left or right side of the disconnect switch. Terminal shields can be installed on the line and load side of the disconnect switch.

NEUTRAL POLE MODULES

Normally open early make (NOEM) configuration. IP20 terminals guard against accidental contact with live parts.

DOOR MOUNT

CODE	CURRENT RATING CODE	LIST
DNA216	16	$17.00
DNA225	25	$17.00
DNA230	30	$19.50
DNA240	40	$21.00
DNA260	60	$23.00

NOTE: For use with Carbon Steel or Polycarbonate enclosures.

PANEL MOUNT

CODE	CURRENT RATING CODE	LIST
PDNA216	16	$17.00
PDNA225	25	$17.00
PDNA230	30	$19.50
PDNA240	40	$21.00
PDNA260	60	$23.00

NOTE: For use with ABS enclosures.

POWER POLE MODULES

Normally open (NO) configuration. IP20 terminals guard against accidental contact with live parts. Electrical ratings are equivalent to the associated switch rating (refer to Section 1 Page 8 for specifications).

DOOR MOUNT

CODE	CURRENT RATING CODE	LIST
DPA216	16	$17.00
DPA225	25	$17.00
DPA230	30	$19.50
DPA240	40	$21.00
DPA260	60	$23.00

NOTE: For use with Carbon Steel or Polycarbonate enclosures.

PANEL MOUNT

CODE	CURRENT RATING CODE	LIST
PDPA216	16	$17.00
PDPA225	25	$17.00
PDPA230	30	$19.50
PDPA240	40	$21.00
PDPA260	60	$23.00

NOTE: For use with ABS enclosures.

AUXILIARY CONTACT MODULES

1 normally open early make (NOEM) and 1 normally closed (NC) contact configuration. IP20 terminals guard against accidental contact with live parts. Auxiliary contacts can be installed on switches rated 16A to 63A, reducing inventory requirements.

Ratings: AC-15: 6A at ≤240V AC
4A at 240V AC to 480V AC
Continuous Thermal Current: 15A

DOOR MOUNT

CODE	CURRENT RATING CODE	LIST
D16A211	16	$27.00
DA211	25 ~ 60	$27.00

NOTE: For use with Carbon Steel or Polycarbonate enclosures.

PANEL MOUNT

CODE	CURRENT RATING CODE	LIST
PA16DA211	16	$27.00
PADA211	25 ~ 60	$27.00

NOTE: For use with ABS enclosures.

TERMINAL SHIELDS

Terminal shields can be installed on the line or load side of the disconnect switch to provide extra protection and guard against accidental contact with live parts.

CODE	CURRENT RATING CODE	LIST
DS2TS20	16	$ 5.00
DS2TS60	25 ~ 60	$ 5.00

MAXIMUM NUMBER OF NEUTRAL, POWER OR AUXILIARY MODULES BY ENCLOSURE TYPE

ENCLOSURE PART #	SWITCH INSTALLATION	MAXIMUM NUMBER OF MODULES
ABS ENCLOSURE		
ABSDSEN1	Panel	1
ABSDSEN2	Panel	1
ABSDSEN3	Panel	2
CARBON STEEL ENCLOSURE		
CSDSEN45	Door	2
POLYCARBONATE ENCLOSURE		
PCDSEN	Door	0
PCDSEN45	Door	2

DISCOUNT SCHEDULE G

SPECIFICATIONS:

SERIES EDS2 ENCLOSED NON-FUSED DISCONNECT SWITCH SPECIFICATIONS

		SWITCH CURRENT RATING CODE				
		16	**25**	**30**	**40**	**60**
ELECTRICAL UL/CSA APPLICATIONS						
	UNITS	For detailed specifications by switch rating code, see Section 1 Page 8				
Rated Operating Voltage, Ue	VAC	600				
Short Circuit Current Ratings @ 600V AC With Class J Fuses	kA	10				
Maximum Fuse Size	A	20	45	45	70	70
ELECTRICAL IEC APPLICATIONS						
		For detailed specifications by switch rating code, see Section 1 Page 8				
Rated Insulation Voltage, Ui	VAC	750				
Rated Impulse Voltage, Uimp	kV	6				
Rated Operating Voltage, Ue	VAC	690				
Short Circuit Current Ratings @ 600V AC With Type gG Fuses	kA	5	30			
Maximum Fuse Size	A	20	32	32	63	63
MECHANICAL						
Operating Torque (Door Mount)	Lb.-in.	4.0	7.0			
CS and PC Enclosures with Operating Handle Types M and G.	Nm	0.45	0.8			
Operating Torque (Panel Mount)	Lb.-in.	4.0	9.0			
ABS Enclosures with Operating Handle Types L, M, and G.	Nm	0.45	1.0			
ENVIRONMENTAL						
Ambient Operating Temperature	°C/°F	-25 to 55 / -13 to 131				
Altitude	m/ft.	2,000/6,528				
Ingress Protection						
Switch Body	IP	20				
Operating Handle	—					
Code L		IP55	—			
Code G		—	Type 1, 2, 3, 3R, 4, 4X, 12, 13, and IP65			
Code M		—	Type 1, 2, 3, 3R, 4, 4X, 12, 13, and IP65			
Enclosure	—					
Code ABS		IP65				
Code CS		—	Type 12, 13, and IP65			
Code PC		—	Type 4X and IP65			
CONSTRUCTION						
		For detailed specifications by switch rating code, see Section 1 Page 8				
ROHS COMPLIANCE		For RoHS compliance documentation by product, refer to www.c3controls.com				

ABS PLASTIC ENCLOSED PANEL MOUNTED DISCONNECT SWITCH WITH "L" OPERATING HANDLE

16A Switches (Dimension Ref. 1)

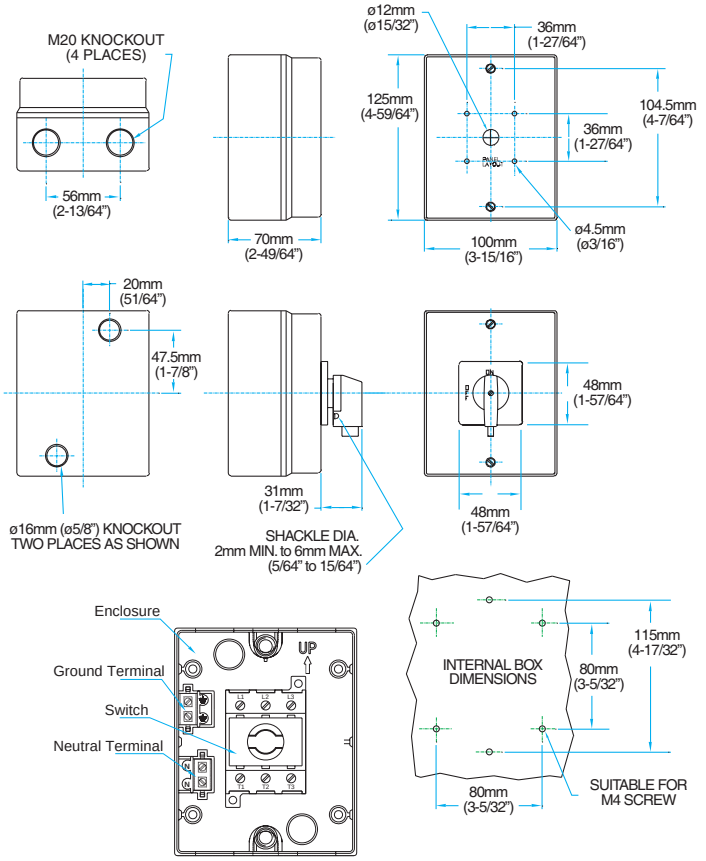

ABS PLASTIC ENCLOSED PANEL MOUNTED DISCONNECT SWITCH WITH "G" OPERATING HANDLE

25A - 32A Switches (Dimension Ref. 2)

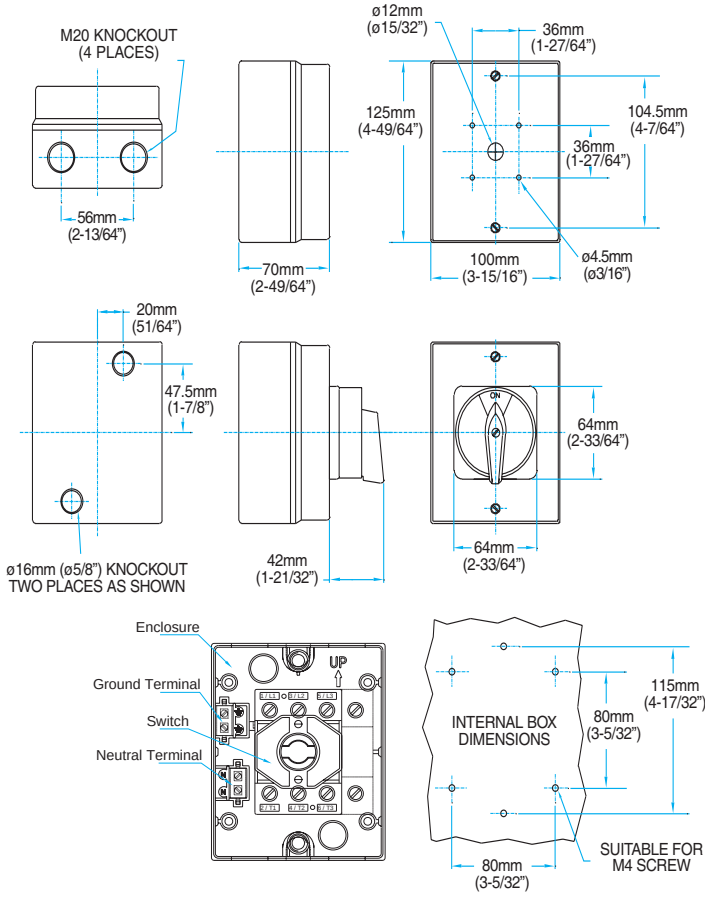

ABS PLASTIC ENCLOSED PANEL MOUNTED DISCONNECT SWITCH WITH "G" OPERATING HANDLE

40A - 63A Switches (Dimension Ref. 3)

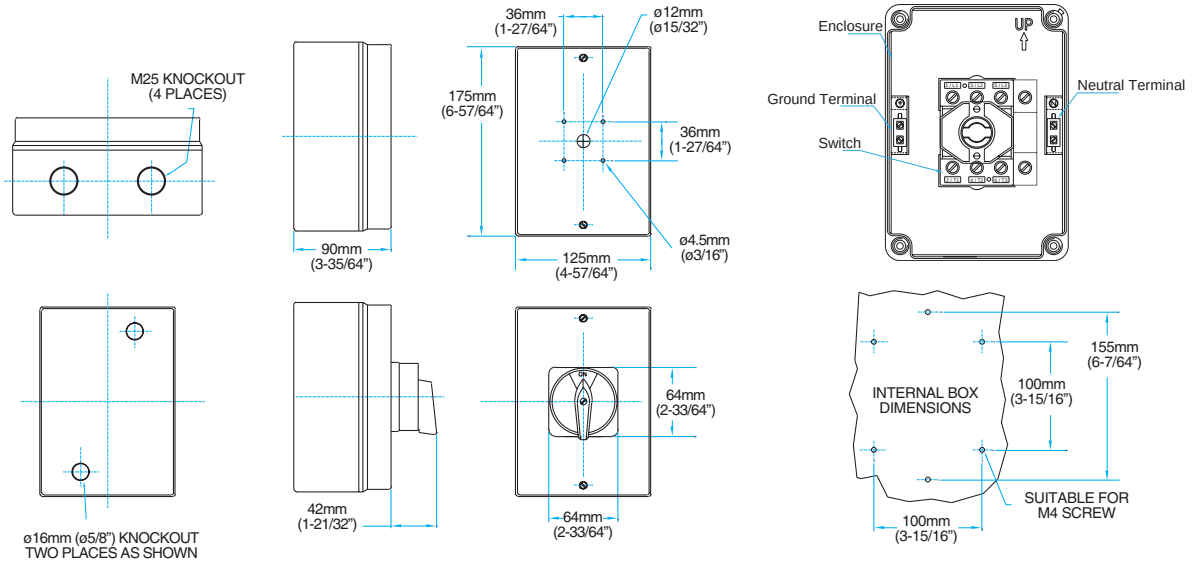

POLYCARBONATE ENCLOSED DOOR/FRONT MOUNTED DISCONNECT SWITCH WITH "G" OR "M" OPERATING HANDLE

25A - 63A Switches (Dimension Ref. 6)

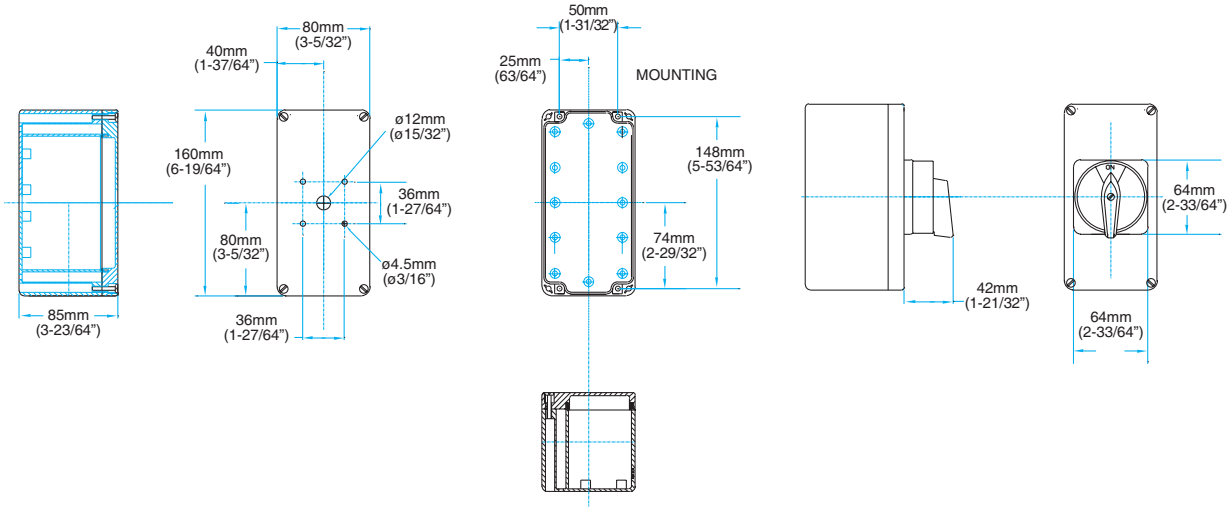

POLYCARBONATE ENCLOSED DOOR/FRONT MOUNTED DISCONNECT SWITCH WITH "G" OR "M" OPERATING HANDLE

25A - 63A Switches (Dimension Ref. 7)

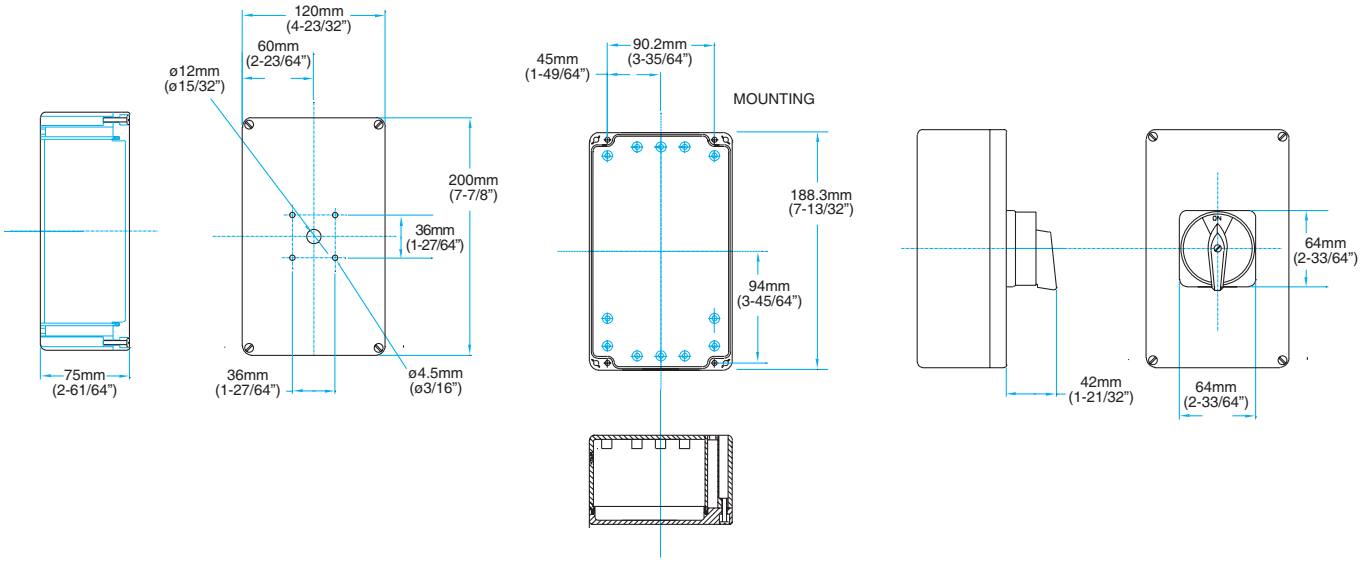

CARBON STEEL ENCLOSED DOOR/FRONT MOUNTED DISCONNECT SWITCH WITH "G" OR "M" OPERATING HANDLE

25A - 63A Switches (Dimension Ref. 4)

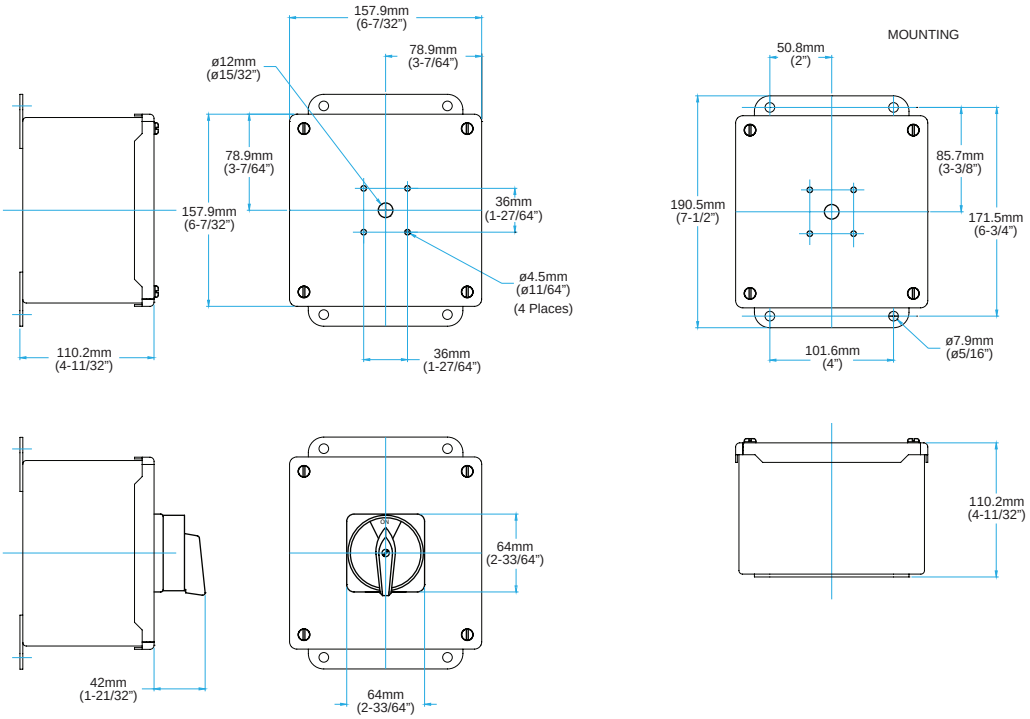

VISIT WWW.C3CONTROLS.COM TO DOWNLOAD CAD DRAWINGS

MINIATURE CIRCUIT BREAKERS

series 1100

c3controls' line of Series 1100 Miniature Circuit Breakers provide reliable short circuit and overload protection for all your branch and downstream device circuit protection. Our branch circuit breakers and supplementary protectors offer a wide range of pole sizes, amperage ranges, and trip curves—providing superior performance and flexible application environments.

Section 3

Applications	4
UL 489 Branch Circuit Breakers	6
UL 1077 Supplementary Protectors	7
Accessories	8
Specifications	9
Trip Characteristics	11
Let Through Energy Curves	13
Bus Bar System	14
Dimensions & Circuit Diagrams	16

PROVEN

Conformity to Standards:
UL 489
UL 1077
UL 508
CSA C22.2 No. 5, No. 235
IEC 60947-2, IEC 60898

Certifications:
UL File#: E496118
UL File#: E537465
UL File#: E336563
UL File#: E508090
CE Marked (per EU Low Voltage Directive 2006/95/EC and RoHS Directive 2011/65/EU)

Visit www.c3controls.com to download product certifications.

NOTE: The scope (range, description, price, specifications, dimensions, etc.) of the product featured in this section is subject to change without notice. Refer to www.c3controls.com for product updates.

MINIATURE CIRCUIT BREAKERS

c3controls offers a comprehensive line of Miniature Circuit Breakers designed and manufactured to meet the needs of the machine builder. We promise durable products at a price that gives you an edge, and we guarantee same-day shipping. Check out all the features of our Series 1100 Miniature Circuit Breakers below!

DELIVERING SUPERIOR PRODUCT QUALITY AND MANUFACTURING EXCELLENCE

✓ **Proven**	Our Series 1100 Miniature Circuit Breakers are UL Listed and Recognized, and CE marked to meet global standards requirements and are compliant to the RoHS directives.
✓ **Easy to Install**	35mm DIN rail mounting for fast and easy installation and removal.
✓ **Visible Markings**	High visibility labels and markings; product part number, amperage, and UL & IEC short-circuit ratings can be seen from front and side of the device for easy identification.
✓ **Compact**	Control panel sizes can be reduced because the small size, 17.5mm width per pole, allows for smaller control panels.
✓ **Added Safety**	Line and load side IP20 guarded finger-safe terminals prevent accidental contact with live parts.
✓ **Limited Lifetime Warranty***	Every product is backed by our limited lifetime warranty—unmatched in the industry—bringing you quality components that perform in the most demanding applications.
✓ **Guaranteed Same-Day Shipping***	Product availability reduces inventory, and improves cash-flow—saving you money. With c3controls any order for standard catalog items received by 6:00pm ET is guaranteed to ship same-day.
✓ **Advantage Pricing**	Our approach to product development, manufacturing, and focus on servicing the OEM and Electrical Equipment Builder reduces cost. The result—the best value in the industry.

*See c3controls Terms & Conditions

> *"The reliability of components and overnight delivery is crucial to our profitability, and counting on c3controls to deliver at the time of need makes them a good fit for the packaging industry."*

Jim Kidder, Engineering Manager • **Eriez Magnetics**

UL 489 Branch Circuit Breaker

UL 1077 Supplementary Protector

UNIQUE PRODUCT LINE FEATURES

FULL-RANGE CIRCUIT PROTECTION

Available in multiple poles, up to 3 plus neutral, and trip curves to meet our customers needs, all of which are available for Guaranteed Same-Day shipping.

SHORT CIRCUIT CURRENT RATING

10kA @ 480Y/277V short circuit current rating on all constructions.

TRIP-FREE DESIGN

Holding the operating handle in the ON position will not prevent the miniature circuit breaker from tripping.

WIRING MADE EASY

Captive screws make it virtually impossible to lose screws when wiring and our box lug design terminals will accept a wide-range of copper wire sizes. Line/load wiring is reversible for ease of use.

SAFETY

All c3controls miniature circuit breakers have built-in IP20 finger-safe protection from accidental contact. Also, breaker status is clearly indicated via the color-coded status window.

ACCESSORIES & BUS BARS

Snap-on accessories are easily installed without the use of tools, further the bus bars also help lower assembly and installation costs.

FIND IT FAST

Miniature Circuit Breakers

- Certifications
- Specifications
- Dimension Drawings
- Installation Instructions
- Easy to Buy

www.c3controls.com

The Differences Between UL 489 Branch Protection and UL 1077 Supplementary Protection

Power Circuit | **Control Circuit**

UL 489 Branch Circuit Breakers

UL 489 Branch Circuit Breakers are designed to serve as the primary overcurrent and short-circuit upstream circuit protection of an electrical panel. In addition to downstream equipment and systems, branch protectors guard the connected wires and cables against improper pole spacings. UL 489 miniature circuit breakers can be used in both UL 489 and UL 1077 applications.

UL 1077 Supplementary Protectors

UL 1077 Supplementary Protectors, while not the primary device of circuit protection, can be used within or directly upstream from single electrical equipment devices to open the circuit or provide supplementary protection. One common method to test whether or not a supplementary protector is being used properly is by evaluating the circuit integrity when it is removed from the circuit. If a UL 1077 type circuit breaker can be removed and maintain proper protection due to upstream protective devices, then the UL 1077 Miniature Circuit Breaker is used correctly. UL 1077 supplementary protectors can only be used in UL 1077 applications.

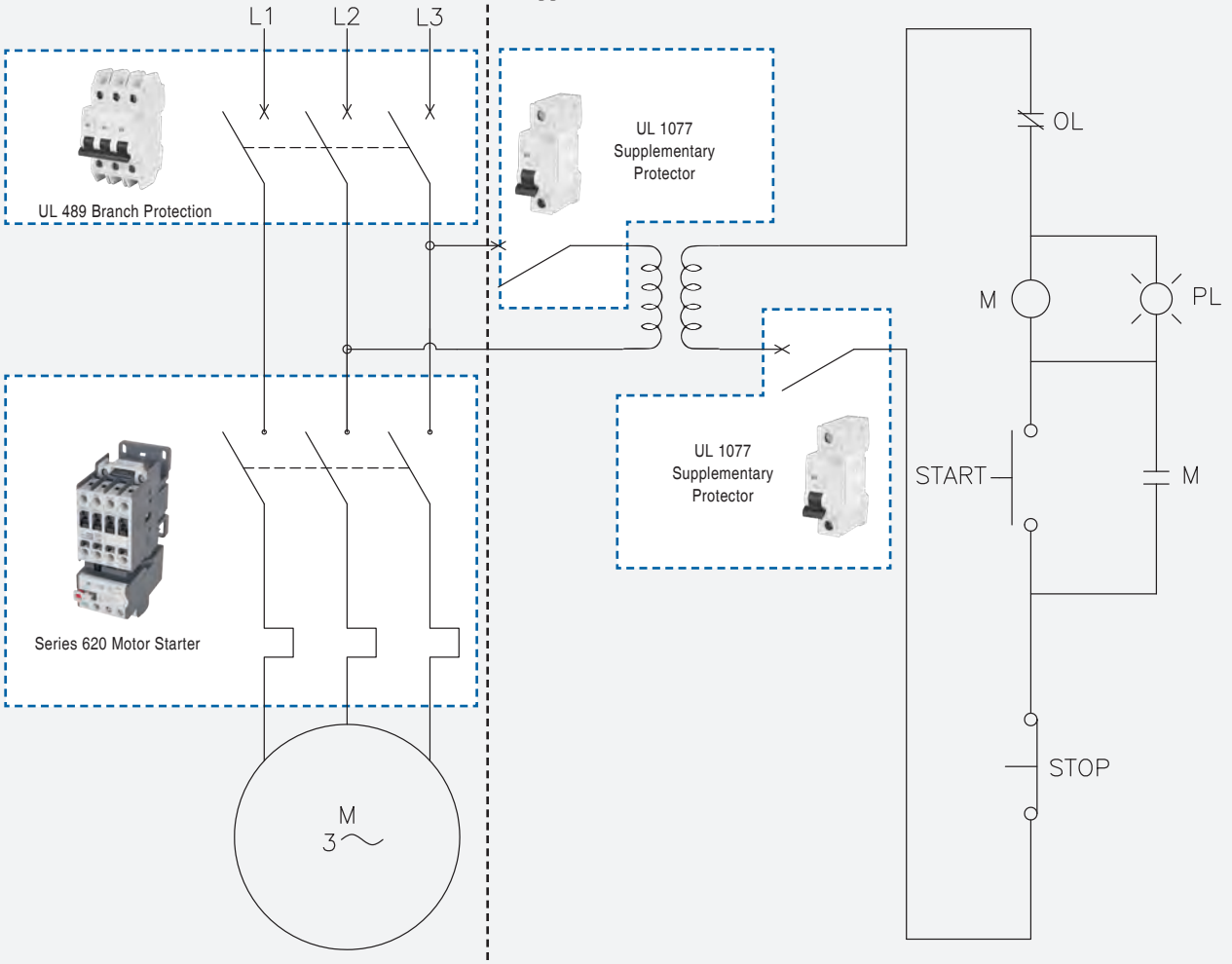

UL 489 Branch Circuit Breakers

c3controls Series 1100 Miniature Circuit Breakers include both thermal and magnetic trip elements for overload and short circuit protection. Our Series 1100-CB circuit breakers provide branch circuit protection and fully meet UL 489 circuit breaker standards. They are available in one, one + neutral, two, three, and three + neutral configurations with current ratings from 0.5A to 63A. In addition, cULus and CE Markings make them suitable for use anywhere in the world.

Product features include:

- Line/load reversible construction makes field wiring error-proof.
- Combination head terminal screws allow the use of “straight”, “phillips”, or “posidrive” screwdrivers for fast and reliable wiring.
- Compact 17.5mm width per pole construction reduces panel size and mounts onto 35mm DIN rail.
- Dual style terminals accept stranded wire 0.8mm^2 – 2.67mm^2 (#18 - #3 AWG) and busbar stabs, and are IP20 guarded against accidental contact with live parts.
- Trip-free design provides assurance that holding the operating handle in the ON position will not prevent the miniature circuit breaker from tripping.
- Up to 21 unique current rating configurations from 0.5 to 63A for a broad range of applications.
- Flexible for use in both alternating current and direct current applications.
- Suitable for use per IEC 60947-2 and IEC 60898.
- Dual trip curve offering (Trip Curves C & D) provides protection for a broad range of AC applications. C trip curves have a low thermal trip delay and a mid-range magnetic trip function to protect low inrush motors, resistive loads, and control circuits. D trip curves have a high thermal trip delay and a very high magnetic trip point to protect high inrush motors, heaters, transformers, and reactive loads while preventing nuisance tripping. DC applications include uninterruptable power supplies (UPS), computer hardware, and telecommunication equipment.

UL 1077 Supplementary Protectors

c3controls Series 1100 Miniature Circuit Breakers include both thermal and magnetic trip elements for overload and short circuit protection. Our Series 1100-SP circuit breakers provide downstream device protection and fully meet UL 1077 supplementary protector standards. They are available in one, one + neutral, two, three, and three + neutral configurations with current ratings from 0.5A to 63A. In addition, cURus and CE Markings make them suitable for use anywhere in the world.

Product features include:

- Line/load reversible construction makes field wiring error-proof.
- Combination head terminal screws allow the use of “straight”, “phillips”, or “posidrive” screwdrivers for fast and reliable wiring.
- Compact 17.5mm width per pole construction reduces panel size and mounts onto 35mm DIN rail.
- Dual style terminals accept stranded wire 0.8mm^2 – 26.7mm^2 (#18 - #3 AWG) and busbar stabs, and are IP20 guarded against accidental contact with live parts.
- Trip-free design provides assurance that holding the operating handle in the ON position will not prevent the miniature circuit breaker from tripping.
- Up to 21 unique current rating configurations from 0.5 to 63A for a broad range of applications.
- Flexible for use in both alternating current and direct current applications.
- Suitable for use per IEC 60947-2 and IEC 60898.
- Triple trip curve offering (Trip Curves B, C, & D) provides protection for a broad range of AC applications. B trip curves are specialized for resistive and slightly inductive loads such as lighting and coils. C trip curves have a low thermal trip delay and a mid-range magnetic trip function to protect low inrush motors, resistive loads, and control circuits. D trip curves have a high thermal trip delay and a very high magnetic trip point to protect high inrush motors, heaters, transformers, and reactive loads while preventing nuisance tripping. DC applications include uninterruptable power supplies (UPS), computer hardware, and telecommunication equipment.

IT'S EASY TO BUILD YOUR OWN CIRCUIT BREAKER

Simply pick the code number from each of the sections below and combine them to build your part number.

Miniature Circuit Breakers
UL 489 Branch Circuit Breakers

1100 – CB ____ ____ **2** ____
I II III IV V VI

Example: To build one of our most popular UL 489 Miniature Circuit Breakers, the part number would be **1100 + CB + III + IV + 2 + VI** or **1100-CB1C2U10**

I. PRODUCT TYPE

CODE	DESCRIPTION
1100	Series 1100 Miniature Circuit Breaker

II. DEVICE TYPE

CODE	DESCRIPTION
CB	UL 489 Circuit Breaker

III. NUMBER OF POLES

CODE	DESCRIPTION	LIST
1	Single Pole	$ 58.00
1N	Single Pole + Neutral*	$116.00
2	Two Pole	$116.00
3	Three Pole	$174.00
3N	Three Pole + Neutral*	$232.00

*NOTE: Consult factory for neutral pole availability.

IV. TRIP CHARACTERISTICS

CODE	DESCRIPTION
C	Trip Curve C
D	Trip Curve D

V. FRAME SIZE

CODE	DESCRIPTION
2	17.5mm Frame per Pole

VI. OPERATING CURRENT

CODE	DESCRIPTION
C50	0.5A
D10	1.0A
D16	1.6A
D20	2.0A
D30	3.0A
D40	4.0A
D50	5.0A
D60	6.0A
D70	7.0A
D80	8.0A
U10	10A
U13	13A
U15	15A
U16	16A
U20	20A
U25	25A
U30	30A
U32	32A
U40	40A
U50	50A
U63	63A

DISCOUNT SCHEDULE F

Some of Our Popular Configurations:

MINIATURE CIRCUIT BREAKERS, UL 489 BRANCH CIRCUIT BREAKERS

CATALOG NUMBER	DESCRIPTION	LIST
1100-CB1C2U10	Miniature Circuit Breaker, 1 Pole, 10A, Trip Curve C, UL 489, IEC 60947-2, IEC 60898	$ 58.00
1100-CB1C2D60	Miniature Circuit Breaker, 1 Pole, 6A, Trip Curve C, UL 489, IEC 60947-2, IEC 60898	$ 58.00
1100-CB1D2U10	Miniature Circuit Breaker, 1 Pole, 10A, Trip Curve D, UL 489, IEC 60947-2, IEC 60898	$ 58.00
1100-CB1D2D60	Miniature Circuit Breaker, 1 Pole, 6A, Trip Curve D, UL 489, IEC 60947-2, IEC 60898	$ 58.00
1100-CB2C2U10	Miniature Circuit Breaker, 2 Pole, 10A, Trip Curve C, UL 489, IEC 60947-2, IEC 60898	$116.00
1100-CB2D2D40	Miniature Circuit Breaker, 2 Pole, 4A, Trip Curve D, UL 489, IEC 60947-2, IEC 60898	$116.00
1100-CB3C2U20	Miniature Circuit Breaker, 3 Pole, 20A, Trip Curve C, UL 489, IEC 60947-2, IEC 60898	$174.00
1100-CB3D2U10	Miniature Circuit Breaker, 3 Pole, 10A, Trip Curve D, UL 489, IEC 60947-2, IEC 60898	$174.00

IT'S EASY TO BUILD YOUR OWN CIRCUIT BREAKER

Simply pick the code number from each of the sections below and combine them to build your part number.

Miniature Circuit Breakers
UL 1077 Supplementary Protectors

1100 – SP ____ ____ **2** ____
I II III IV V VI

Example: To build one of our most popular UL 1077 Miniature Circuit Breakers, the part number would be **1100 + SP + III + IV + 2 + VI** or **1100-SP1B2U10**

I. PRODUCT TYPE

CODE	DESCRIPTION
1100	Series 1100 Miniature Circuit Breaker

II. DEVICE TYPE

CODE	DESCRIPTION
SP	UL 1077 Supplementary Protector

III. NUMBER OF POLES

CODE	DESCRIPTION	LIST
1	Single Pole	$ 29.00
1N	Single Pole + Neutral*	$ 58.00
2	Two Pole	$ 58.00
3	Three Pole	$ 87.00
3N	Three Pole + Neutral*	$116.00

*NOTE: Consult factory for neutral pole availability.

IV. TRIP CHARACTERISTICS

CODE	DESCRIPTION
B	Trip Curve B
C	Trip Curve C
D	Trip Curve D

V. FRAME SIZE

CODE	DESCRIPTION
2	17.5mm Frame per Pole

VI. OPERATING CURRENT

CODE	DESCRIPTION
C50	0.5A
D10	1.0A
D16	1.6A
D20	2.0A
D30	3.0A
D40	4.0A
D50	5.0A
D60	6.0A
D70	7.0A
D80	8.0A
U10	10A
U13	13A
U15	15A
U16	16A
U20	20A
U25	25A
U30	30A
U32	32A
U40	40A
U50	50A
U63	63A

DISCOUNT SCHEDULE **F**

Some of Our Popular Configurations:

MINIATURE CIRCUIT BREAKERS, UL 1077 SUPPLEMENTARY PROTECTORS

CATALOG NUMBER	DESCRIPTION	LIST
1100-SP1C2D60	Miniature Circuit Breaker, 1 Pole, 6A, Trip Curve C, UL 1077 Supplementary Protector, IEC 60947-2, IEC 60898	$ 29.00
1100-SP1C2U10	Miniature Circuit Breaker, 1 Pole, 10A, Trip Curve C, UL 1077 Supplementary Protector, IEC 60947-2, IEC 60898	$ 29.00
1100-SP1D2D60	Miniature Circuit Breaker, 1 Pole, 6A, Trip Curve D, UL 1077 Supplementary Protector, IEC 60947-2, IEC 60898	$ 29.00
1100-SP1D2U10	Miniature Circuit Breaker, 1 Pole, 10A, Trip Curve D, UL 1077 Supplementary Protector, IEC 60947-2, IEC 60898	$ 29.00
1100-SP2C2U10	Miniature Circuit Breaker, 2 Pole, 10A, Trip Curve C, UL 1077 Supplementary Protector, IEC 60947-2, IEC 60898	$ 58.00
1100-SP2D2D50	Miniature Circuit Breaker, 2 Pole, 5A, Trip Curve D, UL 1077 Supplementary Protector, IEC 60947-2, IEC 60898	$ 58.00
1100-SP3C2U10	Miniature Circuit Breaker, 3 Pole, 10A, Trip Curve C, UL 1077 Supplementary Protector, IEC 60947-2, IEC 60898	$ 87.00
1100-SP3C2U16	Miniature Circuit Breaker, 3 Pole, 16A, Trip Curve C, UL 1077 Supplementary Protector, IEC 60947-2, IEC 60898	$ 87.00

SIDE MOUNTED AUXILIARY CONTACT

Our side mounted auxiliary contacts allow remote indication of the status of a circuit breaker or supplementary protector to which it is attached. These contacts come with IP20 guarded terminals and snap onto the left side of the circuit breaker or supplementary protector without the use of tools.

Ratings: AC12 - 6A @ 240V AC (50/60Hz)
DC12 - 1A @ 130V DC
2A @ 48V DC
6A @ 24V DC

CODE	DESCRIPTION	LIST
1100-SA211	1 Normally Open and 1 Normally Closed	$ 52.60

SIDE MOUNTED SHUNT-TRIP MODULES

Shunt-trip modules enable the circuit breaker or supplementary protector to trip, there by cutting off the power supply to any machine or equipment remotely. These modules snap onto the right side of the circuit breaker or supplementary protector without the use of tools. IP20 guarded terminals protect against accidental contact with live parts and can be used in conjunction with auxiliary contacts.

CODE	DESCRIPTION	LIST
1100-SRXD	110V AC, 50/60Hz	$ 96.20
1100-SRXF	230V AC, 50/60Hz	$ 96.20

SIDE MOUNTED AUXILIARY CONTACTS WITH ALARM

This accessory provides remote indication when a circuit breaker or supplementary protector is tripped. The trip can be a result of an overload, short-circuit, operation of shunt-trip accessory, or undervoltage/ overvoltage module. Features IP20 guarded terminals to protect against accidental contact with live parts and snaps-on and installs without the use of tools.

Ratings: AC12 - 3A @ 400V AC (50/60Hz)
6A @ 230V AC (50/60Hz)

CODE	DESCRIPTION	LIST
1100-STA211	1 Normally Open and 1 Normally Closed	$ 67.60

DISCOUNT SCHEDULE F

HEAVY DUTY LOCK-OFF ATTACHMENT

This lock-off attachment when used with a padlock ensures that no unauthorized person switches the circuit breaker or supplementary protector to the ON state after a trip.

CODE	DESCRIPTION	LIST
1100-LO1	Lock-Off Attachment	$ 9.80

SPECIFICATIONS:

UL 489 BRANCH CIRCUIT BREAKERS ELECTRICAL SPECIFICATIONS						
		1 POLE	1 + N POLE	2 POLE	3 POLE	3 + N POLE
ELECTRICAL GENERAL						
	UNITS					
Rated Operating Current	A	0.5 ~ 63				
Operating Frequency	Hz	50/60				
Electrical Life	Ops.	6,000				
Line/Load Wiring		Suitable for reverse feed				
ELECTRICAL UL/CSA APPLICATIONS						
Conformity to Standards		cULus, UL 489, CSA C22.2 No. 5				
AC Rated Operating Voltage	V	277		480Y/277		
DC Rated Operating Voltage	V	60*	—	125* (wired in series)	—	—
MAXIMUM SHORT CIRCUIT RATING						
@ 120 VAC	kA	10				
@ 240 VAC	kA	10				
@ 277 VAC	kA	10				
@ 480Y/277 VAC	kA	10				
@ 60 VDC	kA	10	—	10	—	—
@ 125 VDC (wired in series)	kA	—	—	10	—	—
ELECTRICAL IEC APPLICATIONS						
Conformity to Standards		IEC 60947-2, IEC 60898				
ULTIMATE SHORT CIRCUIT BREAKING CAPACITY (I_{cu})						
@ 240 VAC	kA	10				
@ 415 VAC	kA	10				
RATED SERVICE SHORT CIRCUIT BREAKING CAPACITY (I_{cs})						
@ 240 VAC	kA	10				
@ 415 VAC	kA	10				
*NOTE: Available on request, please consult factory.						

UL 489 BRANCH CIRCUIT BREAKERS MECHANICAL, ENVIRONMENTAL & CONSTRUCTION SPECIFICATIONS						
		1 POLE	1 + N POLE	2 POLE	3 POLE	3 + N POLE
MECHANICAL						
	UNITS					
Mechanical Endurance	Ops.	20,000				
ENVIRONMENTAL						
Ambient Operating Temperature	˚C/˚F	-25 to 55 / -13 to 131				
Ambient Storage Temperature	˚C/˚F	-40 to 80 / -40 to 176				
Calibration Temperature	˚C/˚F	40 / 104				
Altitude	m/ft.	2,000 / 6,562				
Shock	G	15				
CONSTRUCTION						
INGRESS PROTECTION						
Line & Load Terminations	IP	20				
WEIGHT	kg	0.125	0.25	0.25	0.37	0.50
	lbs	0.275	0.55	0.55	0.825	1.10
CONDUCTOR SIZE						
UL/CSA	AWG	1 x #18 ~ #3, 2 x #18 ~ #10				
Solid, Stranded, Fine Stranded	mm^2	1 x 0.8 ~ 26.7				
TERMINAL WIRING CONNECTION						
Wire Type		Copper wire only, 60/75˚ C				
TERMINAL TORQUE						
	Nm/lb-in.	2.5 / 22.2				
ROHS COMPLIANCE		For RoHS compliance documentation by product, refer to www.c3controls.com				

Specifications:

UL 1077 SUPPLEMENTARY PROTECTORS ELECTRICAL SPECIFICATIONS						
		1 POLE	1 + N POLE	2 POLE	3 POLE	3 + N POLE
ELECTRICAL GENERAL						
	UNITS					
Rated Operating Current	A	0.5 ~ 63				
Operating Frequency	Hz	50/60				
Electrical Life	Ops.	6,000				
Line/Load Wiring		Suitable for reverse feed				
ELECTRICAL UL/CSA APPLICATIONS						
Conformity to Standards		cURus, UL 1077, CSA C22.2 No. 235				
AC Rated Operating Voltage	V	277		480Y/277		
DC Rated Operating Voltage	V	60*	—	125* (wired in series)	—	—
MAXIMUM SHORT CIRCUIT RATING						
@ 120 VAC	kA	10				
@ 240 VAC	kA	10				
@ 277 VAC	kA	10				
@ 480Y/277 VAC	kA	10				
@ 60 VDC	kA	10	—	10	—	—
@ 125 VDC (wired in series)	kA	—	—	10	—	—
ELECTRICAL IEC APPLICATIONS						
Conformity to Standards		IEC 60947-2, IEC 60898				
ULTIMATE SHORT CIRCUIT BREAKING CAPACITY (I_{cu})						
@ 240 VAC	kA	10				
@ 415 VAC	kA	10				
RATED SERVICE SHORT CIRCUIT BREAKING CAPACITY (I_{cs})						
@ 240 VAC	kA	10				
@ 415 VAC	kA	10				
*NOTE: Available on request, please consult factory.						

UL 1077 SUPPLEMENTARY PROTECTORS MECHANICAL, ENVIRONMENTAL & CONSTRUCTION SPECIFICATIONS						
		1 POLE	1 + N POLE	2 POLE	3 POLE	3 + N POLE
MECHANICAL						
	UNITS					
Mechanical Endurance	Ops.	20,000				
ENVIRONMENTAL						
Ambient Operating Temperature	°C/°F	-25 to 70 / -13 to 131				
Ambient Storage Temperature	°C/°F	-40 to 80 / -40 to 176				
Calibration Temperature	°C/°F	40 / 104				
Altitude	m/ft.	2,000 / 6,562				
Shock	G	15				
CONSTRUCTION						
INGRESS PROTECTION						
Line & Load Terminations	IP	20				
WEIGHT	kg	0.12	0.24	0.24	0.36	0.48
	lbs	0.265	0.53	0.53	0.795	1.06
CONDUCTOR SIZE						
UL/CSA	AWG	1 x #18 ~ #3, 2 x #18 ~ #10				
Solid, Stranded, Fine Stranded	mm^2	1 x 0.8 ~ 26.7				
TERMINAL WIRING CONNECTION						
Wire Type		Copper wire only, 60/75° C				
TERMINAL TORQUE						
	Nm/lb-in.	2.5 / 22.2				
ROHS COMPLIANCE		For RoHS compliance documentation by product, refer to www.c3controls.com				

UL 489 BRANCH CIRCUIT BREAKER TRIP CHARACTERISTICS

TRIP CURVE C

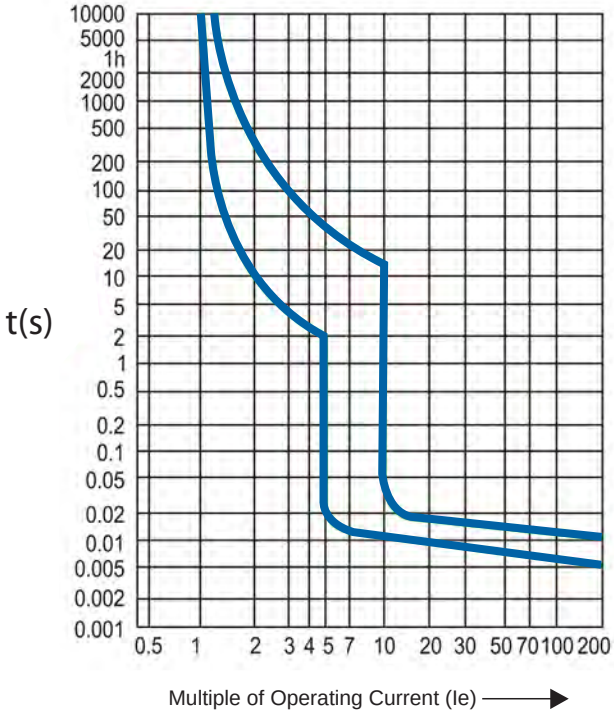

TRIP CURVE D

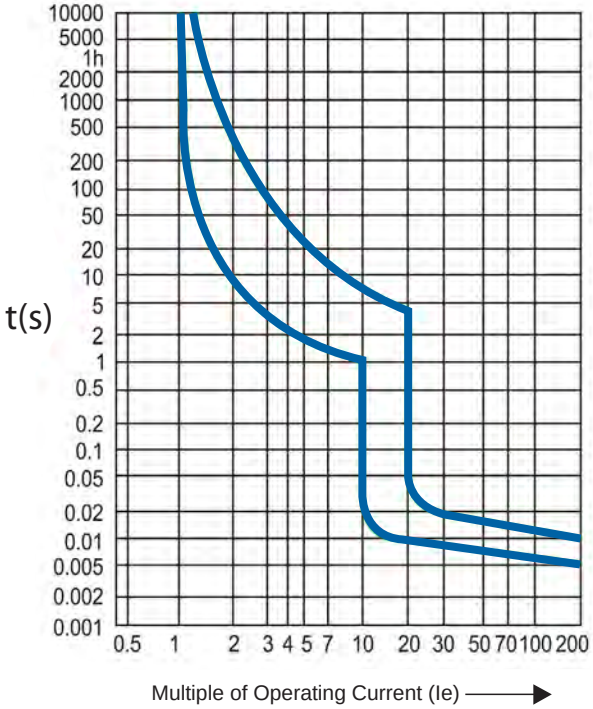

UL 489 BRANCH CIRCUIT BREAKER OPERATING POSITION

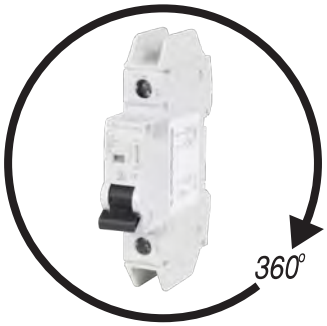

UL 1077 SUPPLEMENTARY PROTECTOR TRIP CHARACTERISTICS

Trip Curve B

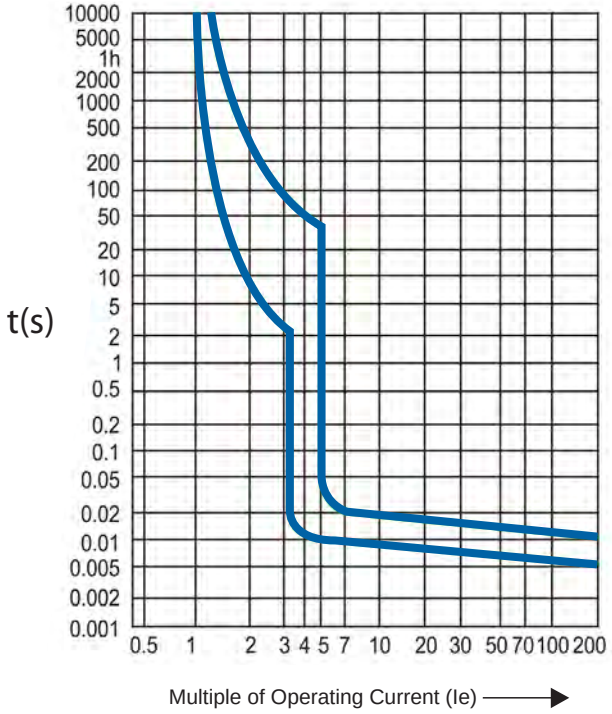

Trip Curve C

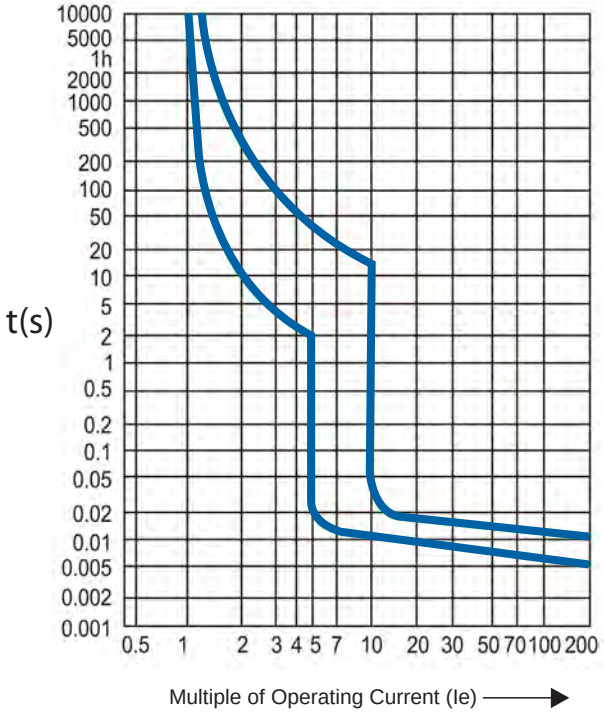

Trip Curve D

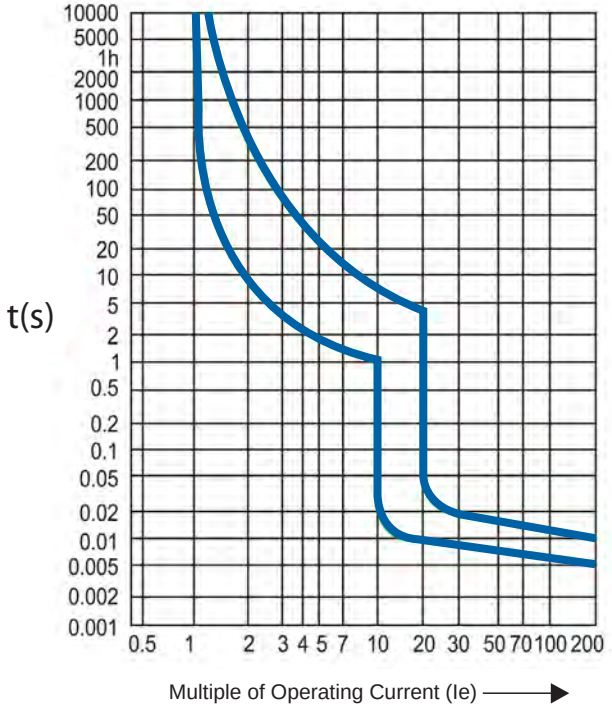

UL 1077 SUPPLEMENTARY PROTECTOR OPERATING POSITION

UL 489 BRANCH CIRCUIT BREAKER & UL 1077 SUPPLEMENTARY PROTECTOR LET THROUGH ENERGY CURVES

Three Pole Breaker with Trip Curve C

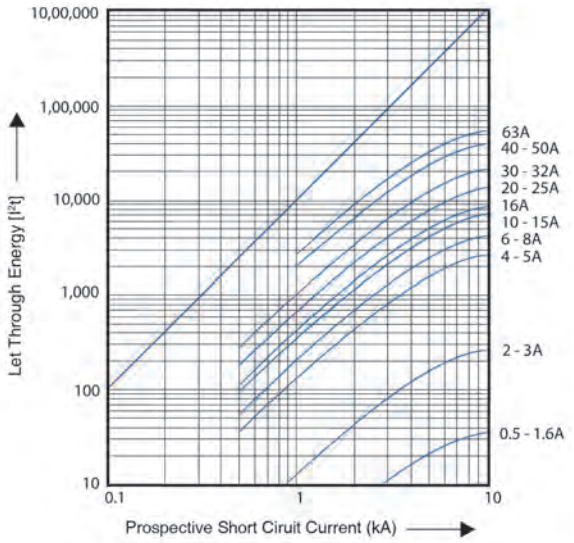

Multipliers for other poles
1 Pole Curve Values = 0.77 x 3 Pole Curve Values
2 Pole Curve Values = 0.66 x 3 Pole Curve Values

Three Pole Breaker with Trip Curve D

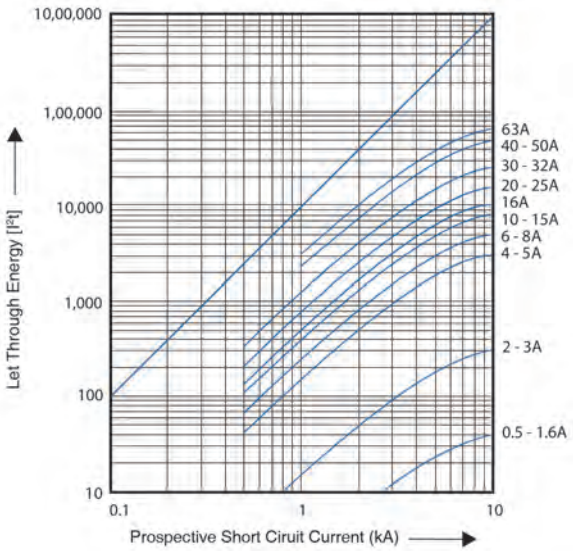

Multipliers for other poles
1 Pole Curve Values = 0.92 x 3 Pole Curve Values
2 Pole Curve Values = 0.81 x 3 Pole Curve Values

UL 1077 SUPPLEMENTARY PROTECTOR LET THROUGH ENERGY CURVE

Three Pole Breaker with Trip Curve B

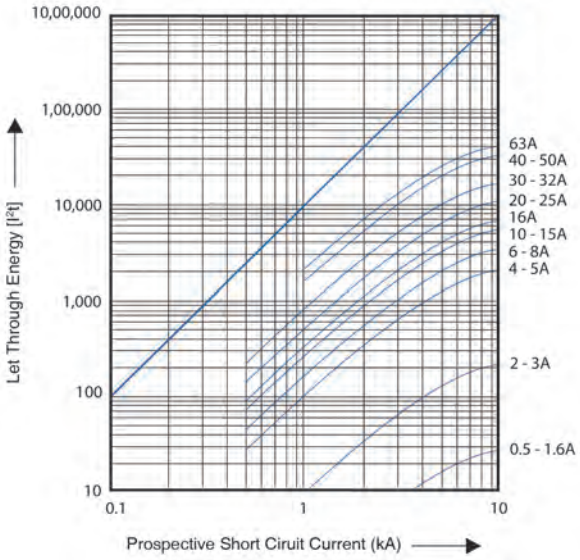

Multipliers for other poles
1 Pole Curve Values = 0.68 x 3 Pole Curve Values
2 Pole Curve Values = 0.63 x 3 Pole Curve Values

Bus Bar System For Series 1100-CB (UL 489) & 1100-SP (UL 1077) Devices

Bus bars are expertly designed for the most efficient MCB installation, offering a dependable solution. Tailored to the needs of contemporary installations, this bus bar boasts a compact design that maximizes space without sacrificing performance.

- **Compatible:** Our bus bar is specifically engineered to work seamlessly with both UL 489 & UL 1077 miniature circuit breakers, ensuring versatile applications.
- **Panel Space Savings:** Its streamlined design facilitates the efficient use of panel space, resulting in a more organized and compact electrical configuration.
- **Reduced Maintenance:** Compared to traditional wiring, the MCB Bus Bar requires minimal to no maintenance, helping to significantly reduce upkeep costs and downtime.
- **High Electrical Ratings:** Designed to support demanding electrical loads, the 115A MCB Bus Bar adheres to strict industry standards for performance and reliability, making it ideal for both commercial and industrial environments.

115A BUS BARS

NEW

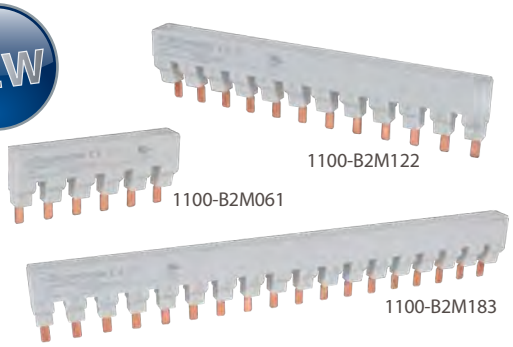

CODE	NO. OF PINS	NO. OF BREAKERS	PHASE	LIST
	FOR USE WITH 1 POLE DEVICES			
1100-B2M061	6	6	1	$ 38.00
1100-B2M121	12	12	1	$ 69.00
1100-B2M181	18	18	1	$106.00
	FOR USE WITH 2 POLE DEVICES			
1100-B2M062	6	3	2	$ 43.00
1100-B2M122	12	6	2	$ 86.00
1100-B2M182	18	9	2	$127.00
	FOR USE WITH 3 POLE DEVICES			
1100-B2M063	6	2	3	$ 47.00
1100-B2M123	12	4	3	$ 89.00
1100-B2M183	18	6	3	$136.00

DISCOUNT SCHEDULE F

ACCESSORIES FOR USE WITH BUS BARS

NEW

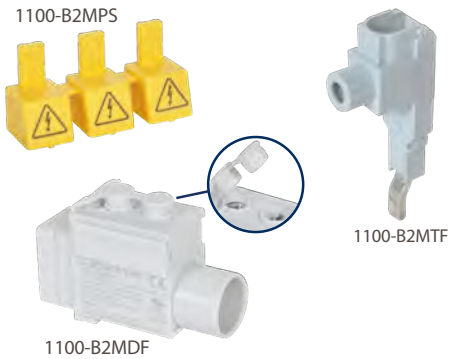

CODE	DESCRIPTION	LIST
1100-B2MPS	Protective Shroud (for 3 unused pins)	$ 7.00
1100-B2MTF	Terminal Power Feed, 35mm²	$ 50.00
1100-B2MDF	Dedicated Power Feed, 50mm²	$ 50.00

DISCOUNT SCHEDULE F

SPECIFICATIONS:

BUS BAR SYSTEM				
GENERAL	**UNITS**	**1100-B2MXXX BUS BAR**	**1100-B2MTF TERMINAL FEED**	**1100-B2MDF DEDICATED FEED**
Operational Voltage	VAC	480 Y/277 V		
Impulse Withstand Voltage	kV	8		
Rated Operational Current	A	115		
Wire Range	AWG / mm²	—	(14 - 8 / 2.5 - 10) #	
		—	(6 - 2 / 16 - 35) ##	
Tightening Torque (Wire Side)	Nm / lb-in	—	(2.3 / 21) #	
		—	(4.5 / 40) ##	
Tightening Torque (Busbar Side)	Nm / lb-in	—	—	2.5 / 22
Wire Strip Length	in / mm	—	0.56 / 14	
Wire Type	—	—	Copper wire only, 75°C	
Cross Section	mm²	16.5	—	
ROHS COMPLIANCE		For RoHS compliance documentation by product, refer to www.c3controls.com.		

- 6-pin and 12-pin busbars are suitable for use in circuits with a maximum of 10,000 RMS symmetrical amperes for MCBs rated up to 32 A, and 5,000 RMS symmetrical amperes for MCBs rated up to 63 A, at voltages up to 480Y/277 VAC.
- 18-pin busbars are suitable for use in circuits with a maximum fault capacity of 5,000 RMS symmetrical amperes for MCBs rated up to 63 A, at voltages up to 480Y/277 VAC
- Busbars and power feeds are rated for 115 A when installed in an enclosure with minimum dimensions of 30 × 30 × 10 inches or larger

BUS BAR SYSTEM FOR SERIES 1100-CB (UL 489) DEVICES

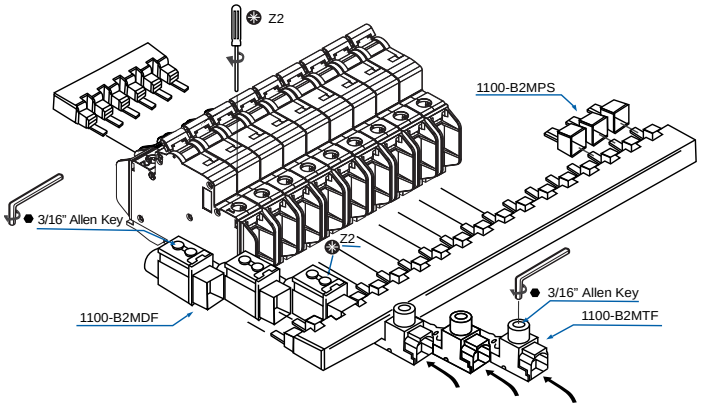

BUS BAR SYSTEM FOR SERIES 1100-SP (UL 1077) DEVICES

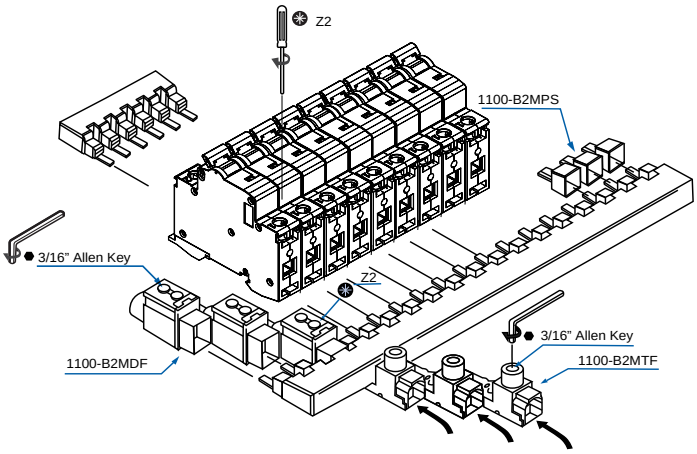

UL 489 BRANCH CIRCUIT BREAKER DIMENSIONS

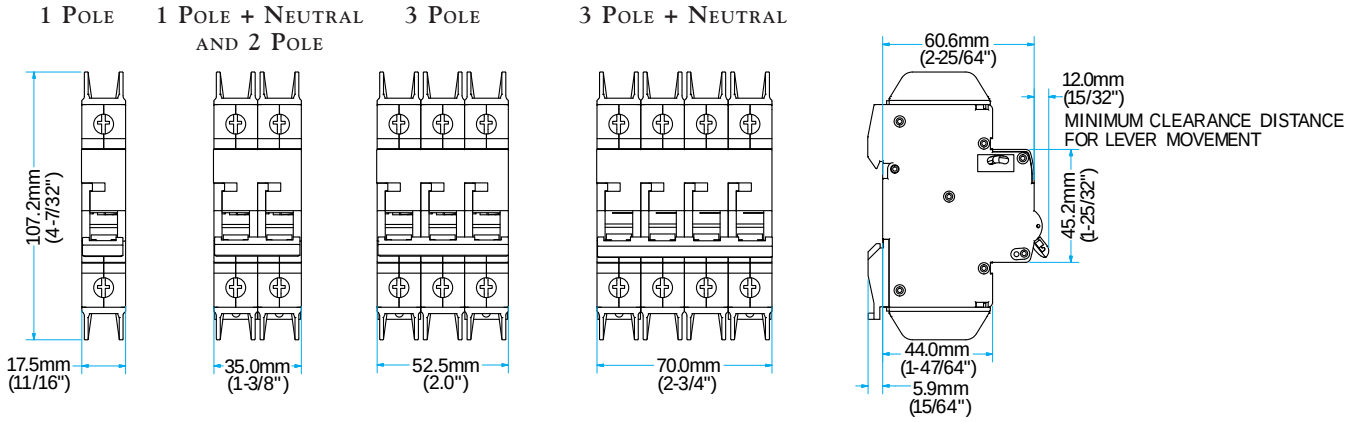

UL 489 BRANCH CIRCUIT BREAKER CIRCUIT DIAGRAMS

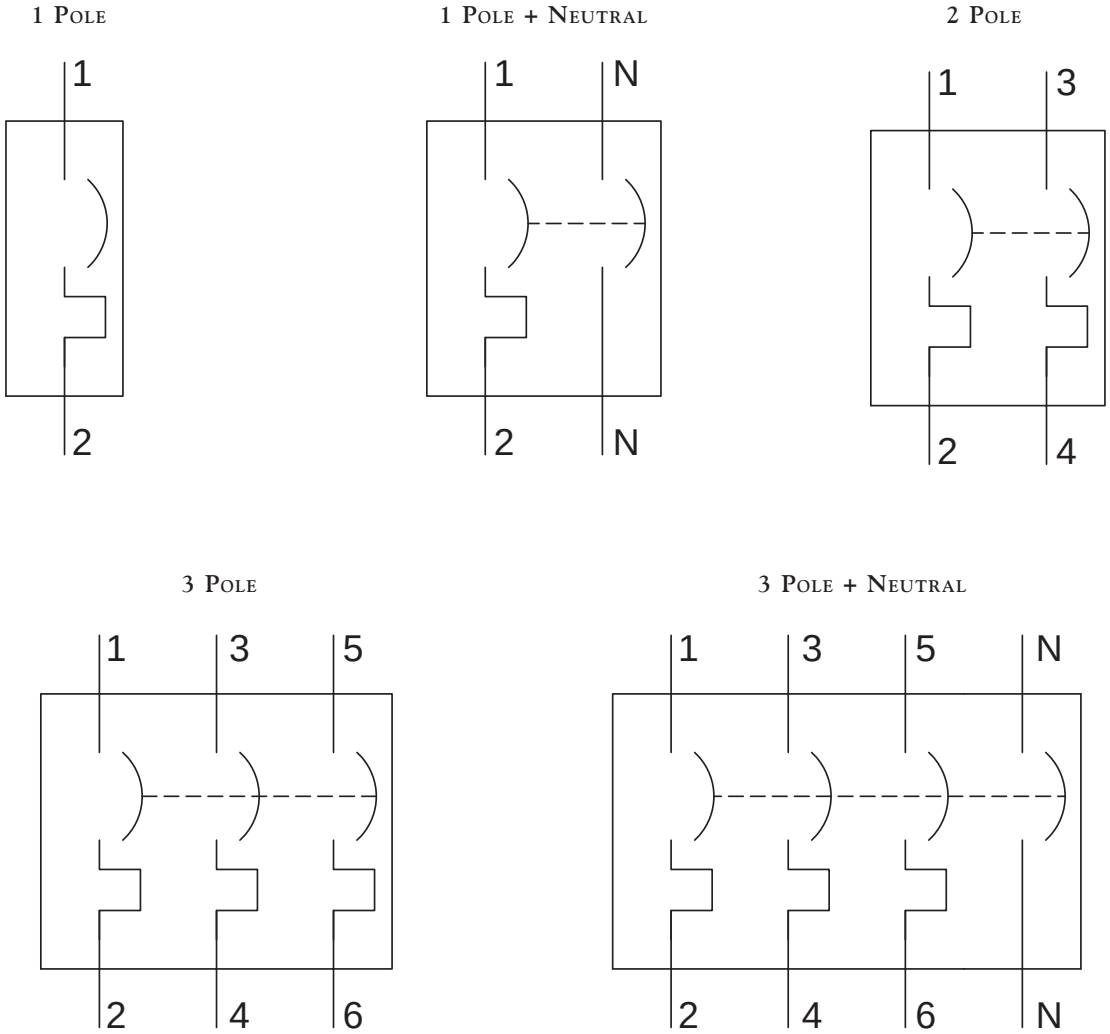

UL 1077 SUPPLEMENTARY PROTECTOR DIMENSIONS

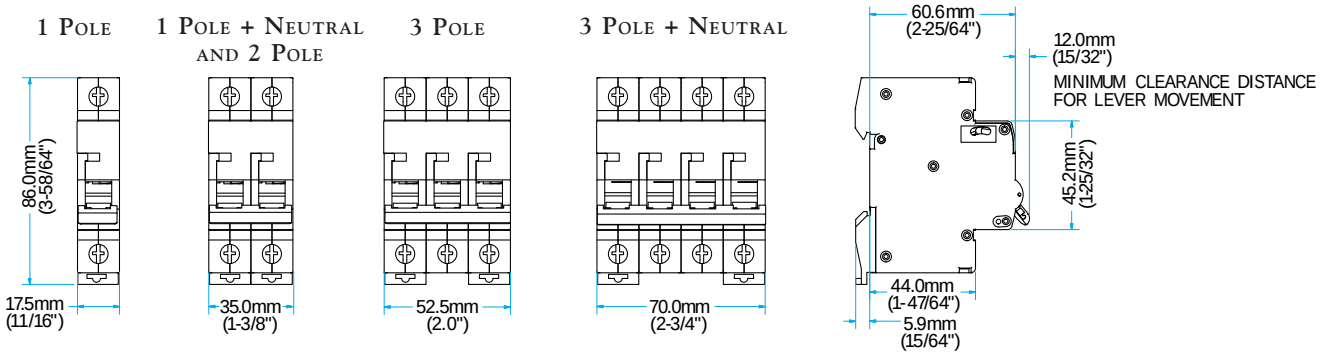

UL 1077 SUPPLEMENTARY PROTECTOR CIRCUIT DIAGRAMS

1 Pole

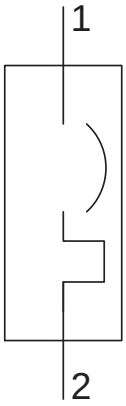

1 Pole + Neutral

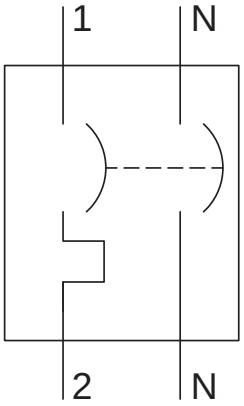

2 Pole

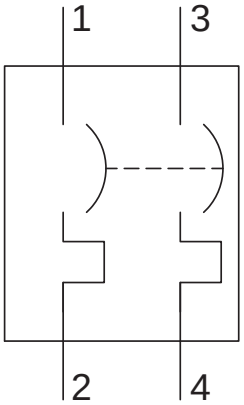

3 Pole

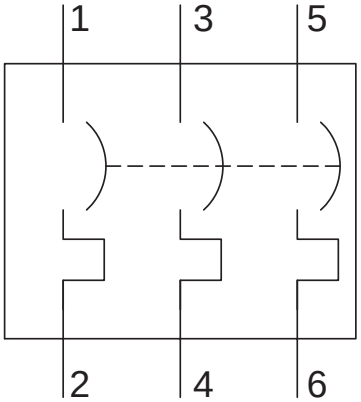

3 Pole + Neutral

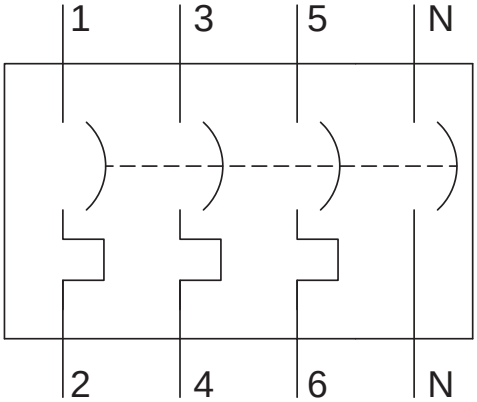

SIDE MOUNTED AUXILIARY CONTACT

1100-SA211

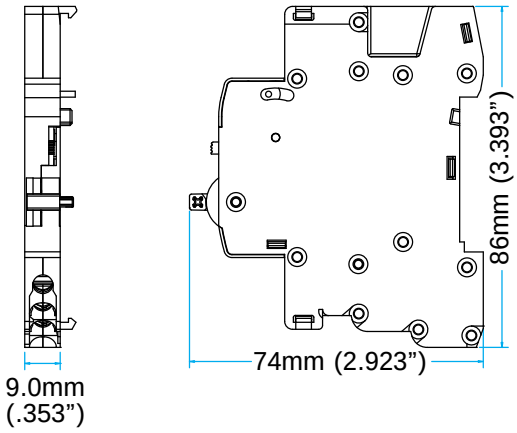

SIDE MOUNTED SHUNT-TRIP MODULES

1100-SRXD & 1100-SRXF

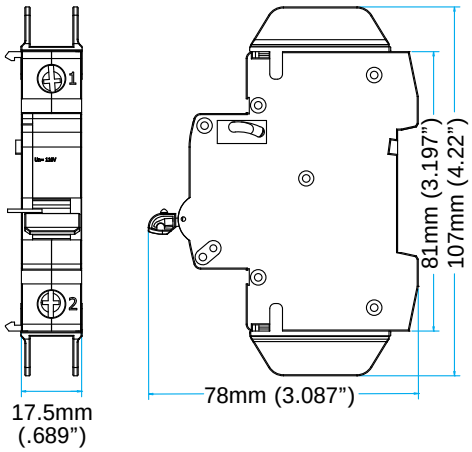

SIDE MOUNTED AUXILIARY CONTACTS WITH ALARM

1100-STA211

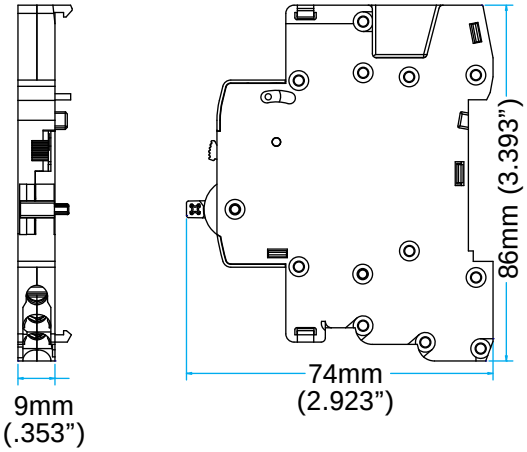

BUS BARS - 115A, 6 PINS

1100-B2M061, B2M062 & B2M063

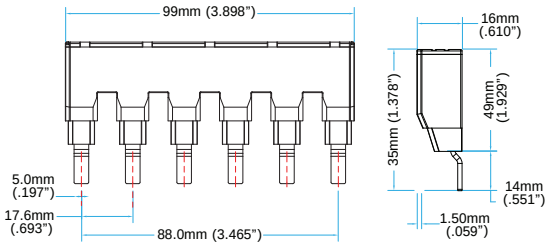

PROTECTIVE SHROUD

1100-B2MPS

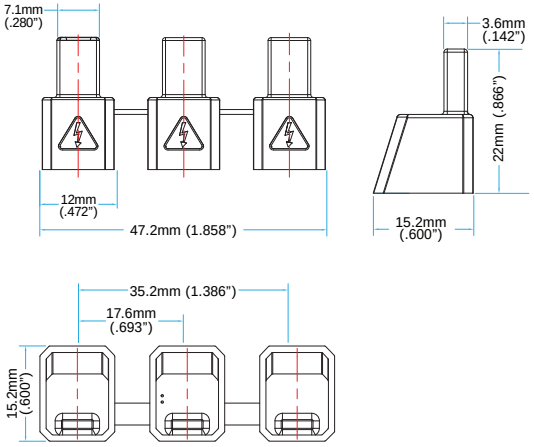

BUS BARS - 115A, 12 PINS

1100-B2M121, B2M122 & B2M123

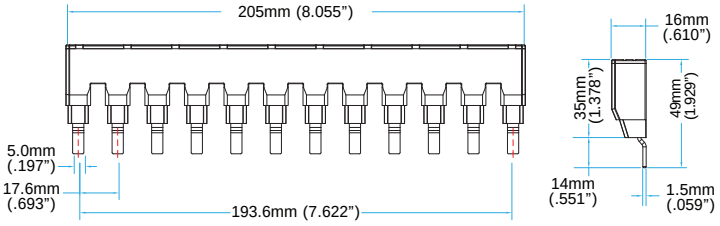

TERMINAL POWER FEED

1100-B2MTF

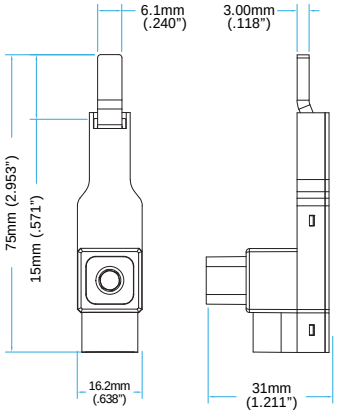

BUS BARS - 115A, 18 PINS

1100-B2M181, B2M182 & B2M183

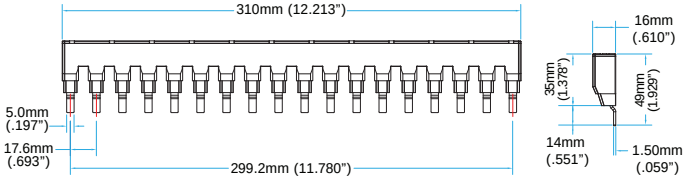

DEDICATED POWER FEED

1100-B2MDF

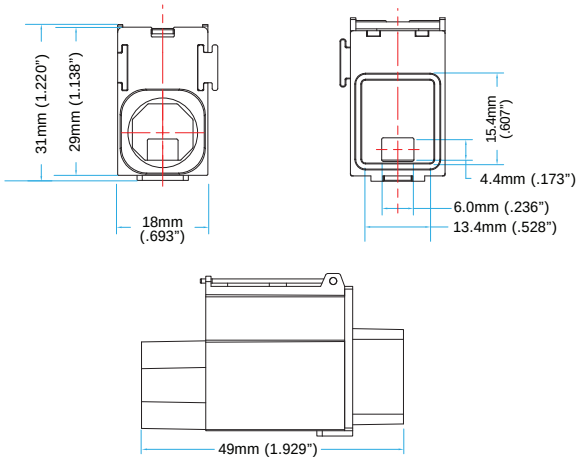

NEW

DC MINIATURE CIRCUIT BREAKERS

series 1110

c3controls' line of Series 1110 Direct Current (DC) Miniature Circuit Breakers (MCBs) provide reliable short circuit and overload protection for all your DC industrial control, transportation, energy storage system and photovoltaic applications. Our DC MCBs offer a wide range of pole sizes, amperage ranges, and trip curves providing superior performance and flexible application environments.

Section 32

UL 489B Branch Circuit Breakers	4
Accessories	6
Specifications	7
Trip Characteristics	8
Circuit Diagrams	9
Dimensions	10

PROVEN

c UL us

Conformity to Standards:	Certifications:
DC Miniature Circuit Breakers	
UL 489B	UL File#: E533935
CSA C22.2 No. 305	UL File#: E533935
Accessories:	
UL 489	UL File#: E508090

Visit c3controls.com to download product certifications.

NOTE: The scope (range, description, price, specifications, dimensions, etc.) of the product featured in this section is subject to change without notice. Refer to c3controls.com for product updates.

DC MINIATURE CIRCUIT BREAKERS

NEW

c3controls knows the importance of clean energy in ensuring a more sustainable future. That's why we're proud to offer Direct Current Miniature Circuit Breakers to support and protect the transition to renewable energy and mission critical applications.

DELIVERING SUPERIOR PRODUCT QUALITY AND MANUFACTURING EXCELLENCE	
✓ **Proven**	Our Series 1110 DC Miniature Circuit Breakers are UL Listed per UL489B, the standard for DC photovoltaic systems and are compliant to the RoHS directives.
✓ **Compact**	Only 17.5mm wide per pole for reduced panel area and lower installed costs.
✓ **Wide Range of Operation**	Rated 250V DC per pole for up to 1000V DC with current ratings from 0.5A to 63A.
✓ **Easy to Install**	35mm DIN rail mounting for fast and easy installation and removal.
✓ **Visible Markings**	High visibility labels and markings can be seen from the front and side of the device for easy identification.
✓ **Added Safety**	Line and load side IP20 guarded finger-safe terminals prevent accidental contact with live parts, while allowing ring, fork, and bare wire connections.
✓ **Customizable Options**	With up to 10 shorting link / jumper configurations, there is a plethora of options to suit all applications.
✓ **Limited Lifetime Warranty***	Every product is backed by our limited lifetime warranty—unmatched in the industry—bringing you quality components that perform in the most demanding applications.
✓ **Advantage Pricing**	Our approach to product development, manufacturing, and focus on servicing the OEM and Electrical Equipment Builder reduces cost. The result—the best value in the industry.

*See c3controls Terms & Conditions

Single Pole

Two Pole

Four Pole

UNIQUE PRODUCT LINE FEATURES

FULL-RANGE CIRCUIT PROTECTION

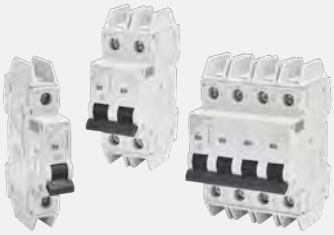

Available in one, two, and four pole constructions, C or D trip curves, and include both magnetic and thermal elements for overload and short circuit protection.

SHORT CIRCUIT CURRENT RATING

10kA short circuit current rating on all constructions — the highest interruption rating in the market.

TRIP-FREE DESIGN

Holding the operating handle in the ON position will not prevent the miniature circuit breaker from tripping.

WIRING MADE EASY

Captive screws make it impossible to lose screws when wiring and our box lug design terminals will accept a wide range of copper wire sizes.

POLARIZED DESIGN

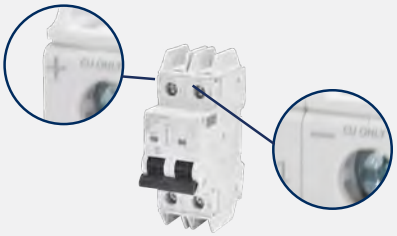

Provides an extra grade of unidirectional protection for overloads and short circuits. Correct wiring is required to achieve circuit protection performance.

SAFETY

All c3controls miniature circuit breakers have built-in IP20 finger-safe protection from accidental contact. Also, breaker status is clearly indicated via the color-coded status window.

FIND IT FAST

DC Miniature Circuit Breakers

- Certifications
- Specifications
- Dimension Drawings
- Installation Instructions
- Easy to Buy

c3controls.com

IT'S EASY TO BUILD YOUR OWN CIRCUIT BREAKER

Simply pick the code number from each of the sections below and combine them to build your part number.

DC Miniature Circuit Breakers
UL 489B Branch Circuit Breakers

1110 – CB _____ _____ 2 _____ – _____
I II III IV V VI VII

NEW

Example: To build one of our most popular DC Miniature Circuit Breakers, the part number would be **1110 + CB + III + IV + 2 + VI + VII** or **1110-CB1C2D10-SB**

I. PRODUCT TYPE

CODE	DESCRIPTION
1110	Series 1110 DC Miniature Circuit Breaker

II. DEVICE TYPE

CODE	DESCRIPTION
CB	UL 489B Circuit Breaker / Branch Protection

III. NUMBER OF POLES

CODE	DESCRIPTION	LIST
1	Single Pole	$118.50
2	Two Pole	$237.00
4	Four Pole	$474.00

IV. TRIP CHARACTERISTICS

CODE	DESCRIPTION
C	Trip Curve C
D	Trip Curve D

V. FRAME SIZE

CODE	DESCRIPTION
2	17.5mm Frame per Pole

DISCOUNT SCHEDULE **F**

VI. OPERATING CURRENT

CODE	DESCRIPTION
C50	0.5A*
D10	1.0A*
D16	1.6A*
D20	2.0A*
D30	3.0A
D40	4.0A*
D50	5.0A
D60	6.0A*
D70	7.0A*
D80	8.0A*
U10	10A
U13	13A*
U15	15A
U16	16A*
U20	20A
U25	25A*
U30	30A
U32	32A*
U40	40A*
U50	50A
U60	60A*
U63	63A

VII. SHORTING LINK / JUMPER CONFIGURATIONS

CODE	DESCRIPTION	
	FOR 1 POLE	
(Blank)	No Shorting Link (Jumper)	$ 0.00
	FOR 2 POLE	
(Blank)	No Shorting Link (Jumper) Note: Same-day shipping applies only to C Curve.	$ 0.00
SB	Shorting Link (Jumper) at Bottom	$ 23.70
ST	Shorting Link (Jumper) at Top*	$ 23.70
	FOR 4 POLE	
(Blank)	No Shorting Link (Jumper)*	$ 0.00
STLT	Shorting Link (Jumper) connected at Top keeping Load in Between*	$ 47.40
SBB	Shorting Link (Jumper) connected Both at Bottom*	$ 47.40
SBLB	Shorting Link (Jumper) connected at Bottom keeping Load in Between*	$ 47.40
SBTB	Shorting Link (Jumper) connected at Bottom then Top then Bottom	$ 47.40
STBT	Shorting Link (Jumper) connected at Top then Bottom then Top*	$ 47.40

Products marked with * are not available for same-day shipping. Contact our Customer First team for lead times and minimum order quantities.

UL 489B Branch Circuit Breakers

NEW

c3controls Series 1110 Direct Current Miniature Circuit Breakers were designed and manufactured for all your DC industrial control, transportation, energy storage system, and photovoltaic applications. With both thermal and magnetic trip elements for overload and short circuit protection, these breakers provide high voltage DC circuit protection and fully meet UL 489B, the standard for DC photovoltaic systems. They are available in one, two, and four pole configurations with current ratings from 0.5A to 63A.

Product features include:

- Line/load reversible construction makes field wiring error-proof.
- Combination head terminal screws allow the use of “straight”, “phillips”, or “posidrive” screwdrivers for fast and reliable wiring.
- Compact 17.5mm width per pole construction reduces panel size and mounts onto 35mm DIN rail.
- Dual style terminals accept stranded wire 0.82mm^2 – 26.7mm^2 (#18 - #3 AWG) and busbar stabs, and are IP20 guarded against accidental contact with live parts.
- Trip-free design provides assurance that holding the operating handle in the ON position will not prevent the miniature circuit breaker from tripping.
- Up to 22 unique current rating configurations from 0.5 to 63A for a broad range of applications.
- Dual trip curve offering (Trip Curves C & D) provides individual load protection pertaining to direct current for situations like renewable energy generation using solar arrays, energy transfer with micro-grids using battery packs, emergency storage and use with Uninterruptible Power Supplies (UPS).

Some of Our Popular Configurations:

DC MINIATURE CIRCUIT BREAKERS

CATALOG NUMBER	DESCRIPTION	LIST
1110-CB1C2D10-SB	DC Miniature Circuit Breaker, UL 489B, 1 Pole, Trip Curve C, 1.0A, Jumper at Bottom	$ 142.20
1110-CB1C2U10	DC Miniature Circuit Breaker, UL 489B, 1 Pole, Trip Curve C, 10A	$ 118.50
1110-CB2C2U30	DC Miniature Circuit Breaker, UL 489B, 2 Pole, Trip Curve C, 30A	$ 237.00
1110-CB2D2U16-SB	DC Miniature Circuit Breaker, UL 489B, 2 Pole, Trip Curve D, 16A, Jumper at Bottom	$ 260.70
1110-CB4D2U60-SBTB	DC Miniature Circuit Breaker, UL 489B, 4 Pole, Trip Curve D, 60A, Jumper Connected at Bottom then Top then Bottom	$ 521.40

SIDE MOUNTED AUXILIARY CONTACT

Our side mounted auxiliary contacts allow remote indication of the status of a circuit breaker or supplementary protector to which it is attached. These contacts come with IP20 guarded terminals and snap onto the left side of the circuit breaker or supplementary protector without the use of tools.

Ratings: AC12 - 6A @ 240V AC (50/60Hz)
DC12 - 1A @ 130V DC
2A @ 48V DC
6A @ 24V DC

CODE	DESCRIPTION	LIST
1100-SA211	1 Normally Open and 1 Normally Closed	$ 52.60

HEAVY DUTY LOCK-OFF ATTACHMENT

This lock-off attachment when used with a padlock ensures that no unauthorized person switches the circuit breaker or supplementary protector to the ON state after a trip.

NEW

CODE	DESCRIPTION	LIST
1100-LO1	Lock-Off Attachment	$ 9.80

SIDE MOUNTED SHUNT-TRIP MODULES

Shunt-trip modules enable the circuit breaker or supplementary protector to trip, there by cutting off the power supply to any machine or equipment remotely. These modules snap onto the right side of the circuit breaker or supplementary protector without the use of tools. IP20 guarded terminals protect against accidental contact with live parts and can be used in conjunction with auxiliary contacts.

CODE	DESCRIPTION	LIST
1100-SRXD	110V AC, 50/60Hz	$ 96.20
1100-SRXF	230V AC, 50/60Hz	$ 96.20

SIDE MOUNTED AUXILIARY CONTACTS WITH ALARM

This accessory provides remote indication when a circuit breaker or supplementary protector is tripped. The trip can be a result of an overload, short-circuit, operation of shunt-trip module. Features IP20 guarded terminals to protect against accidental contact with live parts and snaps-on and installs without the use of tools.

Ratings: AC12 - 3A @ 400V AC (50/60Hz)
6A @ 230V AC (50/60Hz)

CODE	DESCRIPTION	LIST
1100-STA211	1 Normally Open and 1 Normally Closed	$ 67.60

DISCOUNT SCHEDULE F

Specifications:

ELECTRICAL, MECHANICAL, ENVIRONMENTAL & CONSTRUCTION				
		1 POLE	2 POLE	4 POLE
ELECTRICAL GENERAL				
	UNITS			
Rated Operating Current	A	0.5 ~ 63		
Electrical Life	Ops.	6,000		
Tripping Curves		C, D		
ELECTRICAL UL/CSA APPLICATIONS				
Conformity to Standards		UL 489B, CSA C22.2 No. 305 as Photovoltaic Breakers		
DC Rated Operating Voltage	VDC	250	500	1000
MAXIMUM SHORT CIRCUIT RATING				
@ 250 VDC	kA	10		
@ 500 VDC	kA	10		
@ 750 VDC	kA	10		
@ 1000 VDC	kA	10		
MECHANICAL				
Mechanical Endurance	Ops.	20,000		
ENVIRONMENTAL				
Ambient Operating Temperature	˚C / ˚F	-20 to 50 / -4 to 122		
Ambient Storage Temperature	˚C / ˚F	-25 to 80 / -13 to 176		
Calibration Temperature	˚C / ˚F	40 / 104		
Altitude	m / ft.	2,000 / 6,562		
Shock	G	15		
CONSTRUCTION				
Poles (availability)		1, 2, 3 and 4 Pole		
Mounting		Standard 35mm DIN Rail		
Width of MCB		17.5mm		
Terminal Screws		Captive		
INGRESS PROTECTION				
Line & Load Terminations	IP	20		
WEIGHT				
	kgs	0.125	0.25	0.50
	lbs	0.275	0.55	1.10
CONDUCTOR SIZE				
UL/CSA	AWG	1 x #18 ~ #3, 2 x #18 ~ #10		
Solid, Stranded, Fine Stranded	mm^2	1 x 0.82 ~ 26.7		
TERMINAL WIRING CONNECTION				
Wire Type		Copper wire only, 75˚C		
TERMINAL TORQUE				
	Nm / lb-in.	2.5 / 22.2		
CONTACT INDICATION		Green and Red		
DESIGN		Trip Free Design (breaker cannot be defeated by holding the handle in the "ON" position)		
ROHS COMPLIANCE		For RoHS compliance documentation by product, refer to c3controls.com		

TRIP CURVES

Trip Curve C

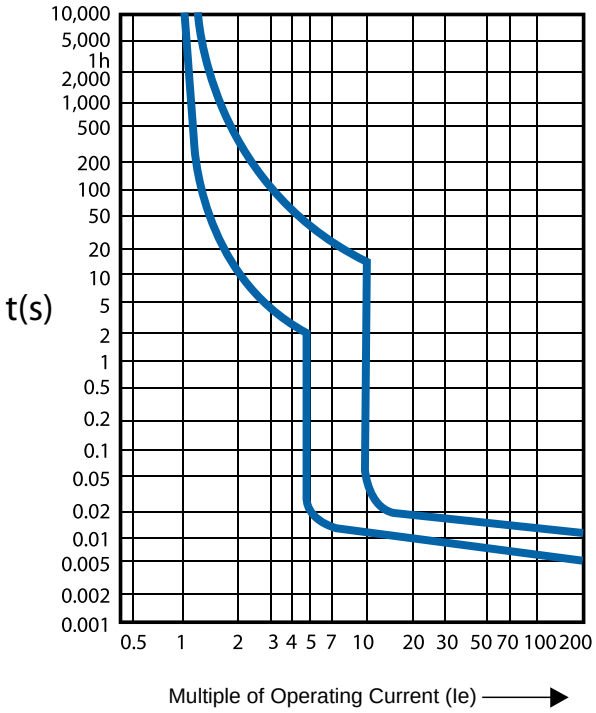

Trip Curve D

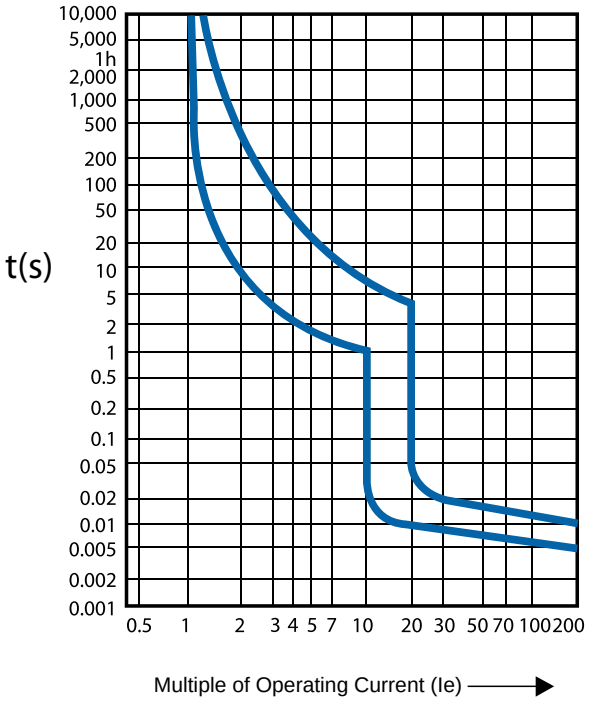

CIRCUIT DIAGRAM - 1 POLE

1110-CB1*2***

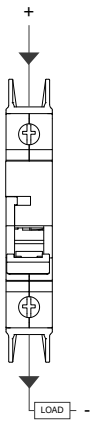

CIRCUIT DIAGRAMS - 2 POLE

1110-CB2*2***** 1110-CB2*2***-SB 1110-CB2*2***-ST

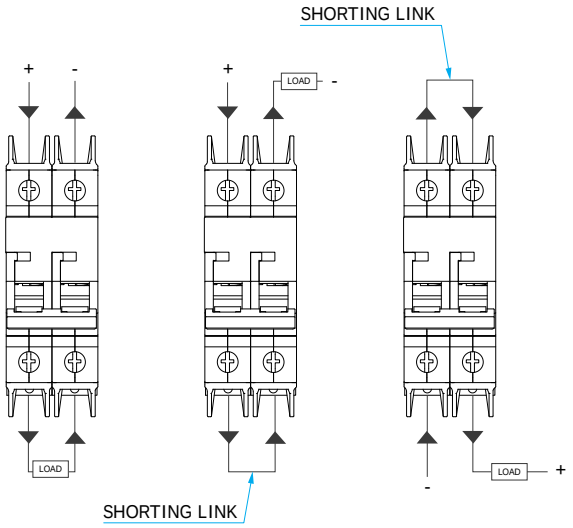

NOTE: **** Represents the trip curve and operating current codes. Refer to page 4.

CIRCUIT DIAGRAMS - 4 POLE

1110-CB4*2***-STLT 1110-CB4*2***-SBB 1110-CB4*2***-SBLB 1110-CB4*2***-SBTB 1110-CB4*2***-STBT

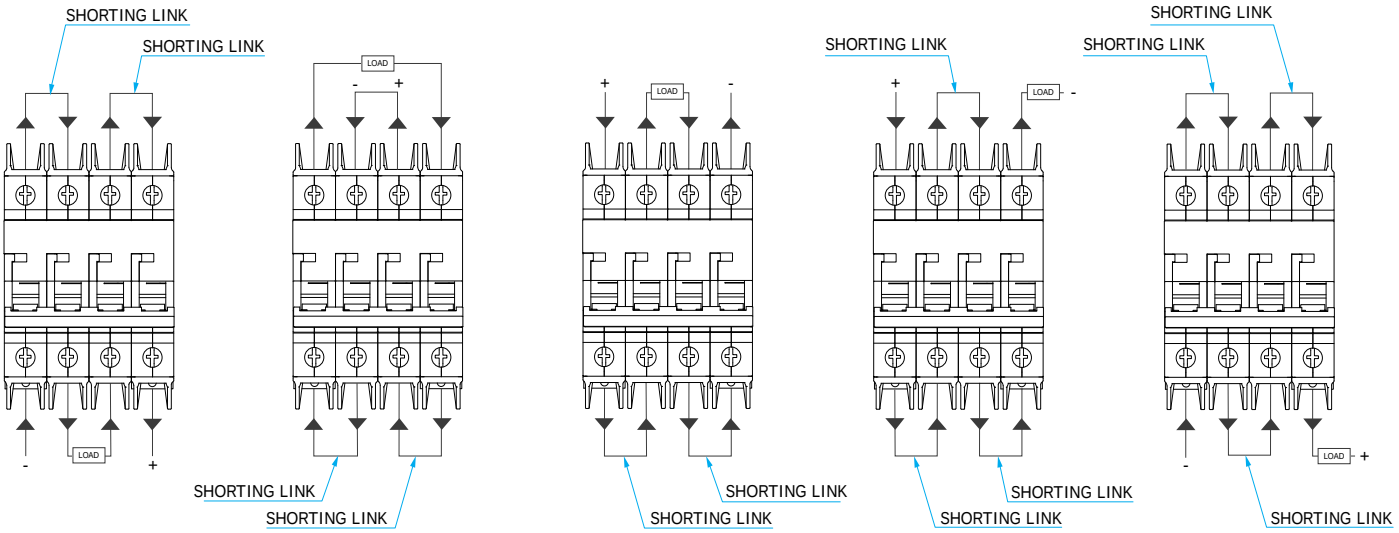

NOTE: **** Represents the trip curve and operating current codes. Refer to page 4.

UL 489B BRANCH CIRCUIT BREAKER

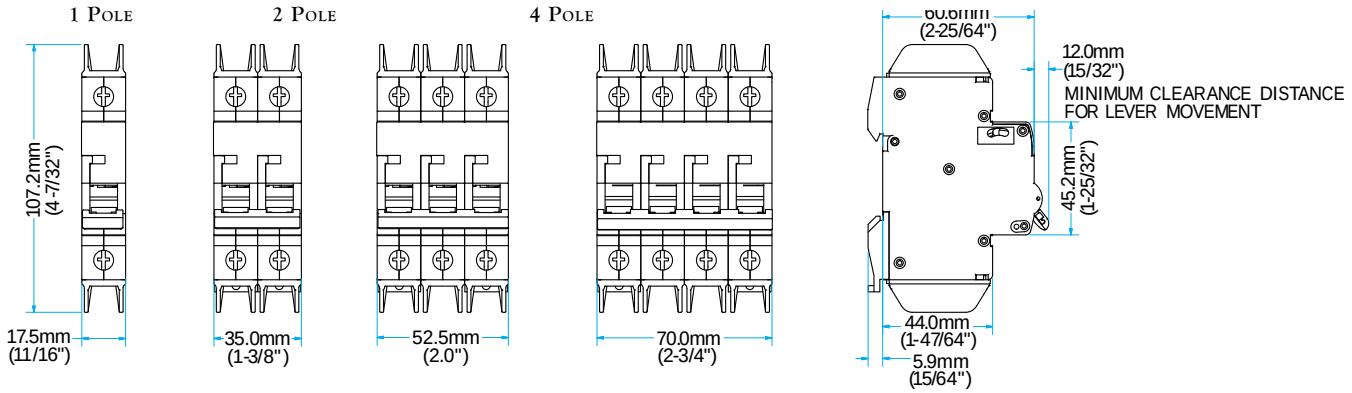

SIDE MOUNTED AUXILIARY CONTACT

1100-SA211

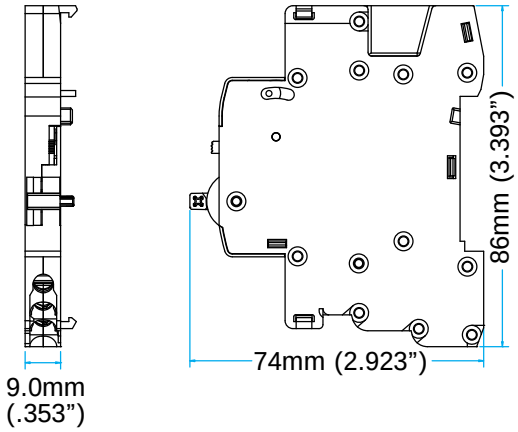

SIDE MOUNTED SHUNT-TRIP MODULES

1100-SRXD & 1100-SRXF

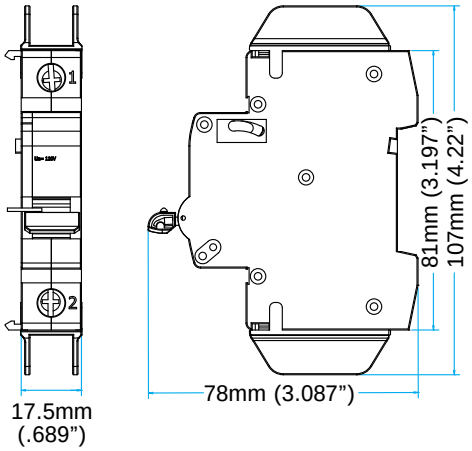

SIDE MOUNTED AUXILIARY CONTACT WITH ALARM

1100-STA211

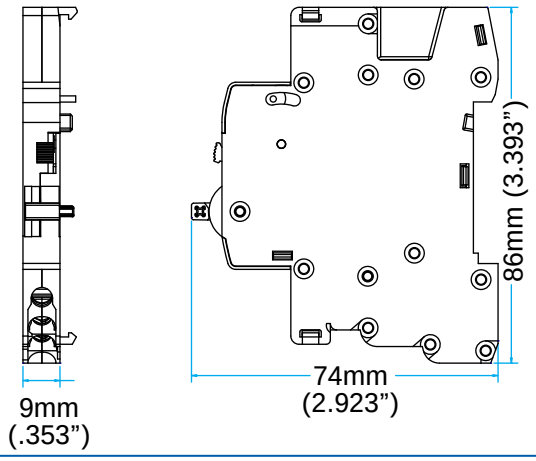

CONTACTORS

series 300 non-reversing

series 310 reversing

c3controls' line of Contactors are easy to install and designed to perform in a broad range of global applications. Our Series 300 Non-Reversing and Series 310 Reversing Contactors feature DIN rail and panel mounting, IP20 guarded terminals, multi-point coils, and include a wide variety of shared accessories.

Section 4

Series 300 Non-Reversing	6
Series 310 Reversing	8
Accessories	10
Replacement Components	12
Specifications	13
Circuit Diagrams	17
Electrical Life	18
Dimensions	19

PROVEN

Conformity to Standards:
UL 508, 60947-4-1
CSA C22.2 No. 14
IEC 60947-1, 60947-4-1

Certifications:
UL File #: E236197 (Guide NLDX, NLDX7), E68568 (Guide NKCR, NKCR7)

CE Marked (per EU Low Voltage Directive 2006/95/EC and RoHS Directive 2011/65/EU)

Visit www.c3controls.com to download product certifications.

NOTE: The scope (range, description, price, specifications, dimensions, etc.) of the product featured in this section is subject to change without notice. Refer to www.c3controls.com for product updates.

CONTACTORS

c3controls offers a comprehensive line of Motor Control products designed and manufactured to meet the needs of the machine builder. We promise durable products at a price that gives you an edge, and we guarantee same-day shipping. Check out all the features of our Series 300/310 standard contactors below!

DELIVERING SUPERIOR PRODUCT QUALITY AND MANUFACTURING EXCELLENCE

✓ **Proven**	Our Series 300 and 310 Standard Contactors are UL Listed and CE marked, meeting global standards requirements.
✓ **Compact Size**	Reduced panel area for lower installed costs—Four (4) frame sizes directly interchangeable with other manufacturers.
✓ **Lower Cost**	Snap-on front mounted and side mounted auxiliary contacts install without the use of tools for lower installed costs.
✓ **Convenient**	Wide variety of AC and DC operating coils for control circuit application flexibility. 50A to 105A DC operated devices feature electronic coil control.
✓ **Easy to Install**	35mm DIN rail mounting for all contactors from 9A to 105A for fast and easy installation and removal, or panel mounting for more secure installation in high shock and vibration applications.
✓ **Modular Design**	Modular design allows easy installation of Series 320 Overload Relays and the complete range of Series 330 Motor Protection Circuit Breakers and accessories.
✓ **Visible Certifications**	Our product certifications and electrical ratings are clearly marked on the outside of the device for easy reference during installation.
✓ **Environmentally Friendly**	Environmentally friendly contacts are cadmium free and non-metallic materials are asbestos, halogen, and cadmium free. All c3controls products are compliant to the RoHS directives.
✓ **Added Safety**	IP20 guarded terminals with dual terminal markings prevent accidental contact with live parts.
✓ **36-Month Warranty***	Every product is backed by our 36-Month Warranty—giving you confidence in the quality, reliability, and performance of components designed for the most demanding applications.
✓ **Guaranteed Same-Day Shipping***	Product availability reduces inventory, and improves cash-flow—saving you money. With c3controls any order for standard catalog items received by 6:00pm ET is guaranteed to ship same-day.
✓ **Advantage Pricing**	Our approach to product development, manufacturing, and focus on servicing the OEM and Electrical Equipment Builder reduces cost. The result—the best value in the industry.

*See c3controls Terms & Conditions

"When GinSan expanded to Canada, we needed to find a supplier that could provide us with motor protection products that conformed to Canadian standards without increasing our bottom line. During the evaluation and testing of a new supplier, c3controls motor control products met all of our quality standards. One added feature c3controls offers on their contactors is they have an extra, fourth contact—eliminating the need to add an extra auxiliary onto the device."

Mike Fox, Engineering Chief • **GinSan Industries Inc.**

Non-Reversing Contactor

Reversing Contactor

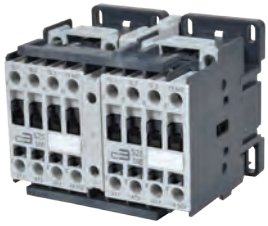

UNIQUE PRODUCT LINE FEATURES

HIGH FAULT SCCR

High fault short circuit current rating of 100kA @ 480V and 600V with Class J fuses, provides safety and reliability in high fault applications.

INTEGRAL AUXILIARY

Integral auxiliary contacts, 3 power poles + 1 auxiliary, are standard on all c3controls 9A to 25A non-reversing contactors.

SEAMLESS COMPATIBILITY

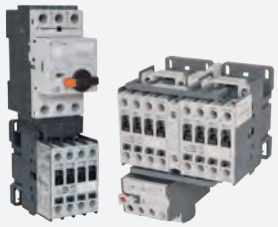

c3controls Series 310, 9A to 25A, AC/DC Reversing Contactors are compatible with directly mounted Series 320-B2 Overload Relays, and our 9A to 40A AC/DC Reversing Contactors direct mount onto Series 330 Motor Protection Circuit Breakers.

COMMON ACCESSORIES

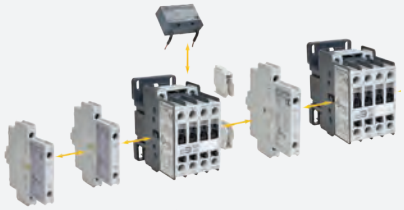

Designing starter assemblies and panels is easy! No more remembering which auxiliary works with each contactor. Our complete range of Series 300 Non-Reversing and Series 310 Reversing Contactors shares common accessories reducing inventory and simplifying installation and assembly.

MULTI-POINT TERMINAL COILS

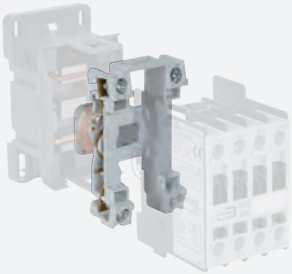

Four terminal coils on all 9A to 105A AC and DC operated contactors are easily accessible, two on the line side and two on the load side.

QUICK IDENTIFICATION

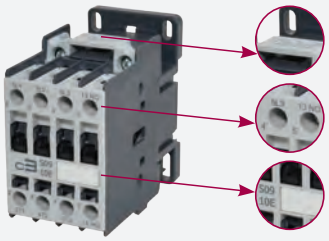

Enhanced markings, improved identification labels, and dual IEC and NEMA terminal markings ensure quick identification of product from all angles simplifying troubleshooting in panels with many devices.

FIND IT FAST

Contactors

- Certifications
- Specifications
- Dimension Drawings
- Installation Instructions
- Easy to Buy

www.c3controls.com

Motor Control Device Solutions

c3controls motor control devices are the perfect solution for manufacturers who want proper motor control and superior motor protection without having to overpay or compromise on quality. In fact, we engineer so much performance and flexibility into our products, we can deliver a remarkably better value than our competitors.

c3controls products deliver like no other.

Seamless Compatibility

Contactors, overload relays and motor protection circuit breakers are designed by c3controls to work together, with common connections and accessories, resulting in a high functioning compact starter.

LEADING THE INDUSTRY
with our compact miniature 10HP contactors and control relays. One frame size (AC or DC)—28% reduction in panel area.

Compact

The small size of c3controls motor control devices, plus features like common accessories, enable assembly into smaller control panels for lower installed costs.

Reliable Protection

Contactors provide the repeated on/off switching for the motor and are designed for motor, actuator, solenoid, and other power switching applications. Overload relays provide Trip Class 10 protection against overload and phase-loss conditions, and have ambient temperature compensation for motor protection in high temperature environments.

Ensures the protection of equipment and user.

Motor protection circuit breakers provide overload, phase-loss and short circuit protection, can be used by themselves as manual motor controllers or with contactors in group motor installations, and can achieve Type 2 coordination for optimum performance.

Type E self-protected combination manual motor controllers provide disconnecting means, branch circuit protection, motor control and motor overload protection all in a single device.

Proven

Our motor control devices are UL Listed and CE marked, meeting global standards requirements for use anywhere in the world.

NFPA 70 - National Electrical Code (NEC)

Understanding what functions are needed in your motor control circuit is critical when selecting motor control devices. Engineers benefit from the standards and codes established to ensure safety and protection to personnel and equipment.

More than just knowing the standards, c3controls, as a manufacturer of motor control products, has the application expertise you need to select the right products.

c3controls & Article 430 - Motors, Motor Circuits and Controllers

	To Supply	NEC Part	c3controls Product Series		
Motor disconnecting means		Part IX	330	630	Type E: 330 630
Motor branch-circuit, short circuit, and ground-fault protection		Part IV			Type E: 330 630
Motor circuit conductor		Part II			
Motor controller		Part VII	300/310 330	620 630	Type E: 330 630
Motor control circuits		Part VI			
Motor overload protection		Part III	320 330	620 630	Type E: 330 630
Motor		Part I			

Our motor control products align with Article 430 Part VII, Motor Controller, of the NFPA 70, the National Electrical Code.

IT'S EASY TO BUILD YOUR OWN CONTACTOR

Simply pick the code number from each of the sections below and combine them to build your part number.

Non-Reversing Contactors

I	II	III

Example: To build one of our most popular Contactors, the part number would be I + II + III or 300-S09N30D10

I. NON-REVERSING CONTACTORS (3 NORMALLY OPEN POLES)

	MAX. Ie (A)		RATINGS FOR SWITCHING AC MOTORS - AC-2, AC-3										
			kW (50Hz)				HP (60Hz)						
			3 PHASE				1 PHASE		3 PHASE				
CODE	AC-3	AC-1	230V	400/415V	500V	690V	115V	230V	200V	230V	460V	575V	LIST
300-S09N30	9	25	2.2	4	5.5	5.5	1/2	1-1/2	3	3	5	7-1/2	$ 53.00
300-S12N30	12	25	3	5.5	7.5	7.5	3/4	2	3	3	7-1/2	10	$ 79.00
300-S18N30	18	32	4	7.5	10	10	1	3	5	5	10	15	$ 87.00
300-S25N30	25	45	7.5	11	15	15	2	3	7-1/2	7-1/2	15	15	$ 99.00
300-S32N30	32	60	9	15	18.5	18.5	3	5	10	10	20	25	$130.00
300-S40N30	40	60	11	18.5	25	30	3	5	10	15	30	25	$178.00
300-S50N30	50	90	15	22	30	35	3	7-1/2	15	15	40	40	$284.00
300-S65N30	65	110	18.5	30	40	45	5	10	20	20	50	50	$350.00
300-S80N30	80	110	22	37	45	45	7-1/2	15	20	25	50	60	$405.00
300-S95N30	95	140	25	45	55	55	7-1/2	15	25	30	60	75	$500.00
300-S105N30	105	140	30	55	65	65	10	20	30	40	75	75	$545.00

II. COIL VOLTAGE CODE

AC COIL VOLTAGE CODES

VOLTAGE	12	24	48	110 / 120	208	220	230	240	277	400	400 ~ 415	480	500	550	600
50Hz	—	—	—	D	—	—	—	—	—	—	R	—	T	U	—
60Hz	—	—	—	D	L	—	—	F	P	—	—	R	—	—	T
50/60Hz	XB	XC	XJ	—	—	XAJ	XN	—	—	XAM	—	—	—	—	—

DC COIL VOLTAGE CODES

VOLTAGE	12	24	24 ~ 28	125	110 ~ 130	208 ~ 240	250	LIST
-S09 to -S25	ZB	ZC	—	ZQ	—	—	ZP	$ 35.00
-S32 to -S40	ZB	ZC	—	ZQ	—	—	ZP	$ 78.00
-S50 to -S105	—	—	EC	—	EL	EE	—	$282.00

III. AUXILIARY CONTACT CONFIGURATION

CODE	DESCRIPTION	LIST
00	Without Auxiliary Contacts (Contactors 300-S32 to 300-S105 only)	—
10	1 Normally Open*	$ 18.00
01	1 Normally Closed*	$ 18.00

*NOTE: Integral right side mounted on 9A ~ 25A contactors, front mounted on 32A ~ 105A contactors.

DISCOUNT SCHEDULE F

Some of Our Popular Configurations:

NON-REVERSING CONTACTORS

CATALOG NUMBER	DESCRIPTION	LIST
300-S09N30D10	Non-Reversing, 9A, 3 Pole, 120V AC Coil, 1 NO Auxiliary Contact	$ 71.00
300-S09N30ZC10	Non-Reversing, 9A, 3 Pole, 24V DC Coil, 1 NO Auxiliary Contact	$106.00
300-S25N30D10	Non-Reversing, 25A, 3 Pole, 120V AC Coil, 1 NO Auxiliary Contact	$117.00

Non-Reversing Contactors

c3controls Series 300 Contactors are ideal for motor, actuator, solenoid, and other power switching applications where panel space is at a premium and device modularity is required to satisfy virtually any application requirement. cULus and CE Markings make them suitable for use anywhere in the world. Small size, IP20 guarded terminals with dual terminal markings, and shared accessories will help reduce your total installed costs and enhance the features and performance of your equipment. Just look and see what the Series 300 has to offer.

Product features include:

- High fault short circuit rating of 100kA @ 480V and 600V with Class J fuses, provides safety and reliability in high fault applications.
- Series 300 25A contactor has an integral auxiliary, 3 power poles plus 1 auxiliary, provides more functionality in a smaller package, reducing bill of material and panel size.
- Removable and replaceable identification marker, standard on all c3controls contactors and Series 300-SFA Auxiliaries, for labeling contactors and front mounted auxiliary contacts - simplifies trouble shooting in panels with many contactors.
- Our side mounted auxiliaries and interlocks are 9mm wide and install without the use of tools onto Series 300 Contactors, reducing panel footprint and simplifying installation.
- Multi-point terminal coils on 9A to 80A AC and DC contactors providing wiring flexibility and installation convenience.
- Lower power consumption for 32A and 40A DC contactors.
- Enhanced markings and high visibility labels for ease of troubleshooting and maintenance.
- Compact size – four (4) frame sizes for devices rated from 9A to 105A. Contactors rated 15HP @ 460V (11kW @ 400V) are only 45mm (1-49/64") wide reducing panel area requirements – smaller enclosures can be used for lower installed costs.
- AC and DC operating coils for control circuit application flexibility. 50A to 105A DC operated devices feature electronic coil control.
- Environmentally friendly contacts are cadmium free and non-metallic materials are asbestos, halogen, and cadmium free.
- IP20 guarded terminals prevent accidental contact with live parts.
- Dual IEC and NEMA terminal markings for ease of wiring anywhere in the world.
- 35mm DIN rail mounting for all contactors from 9A to 105A for fast and easy installation and removal or panel mounting for more secure installation in high shock and vibration applications. Our 9A to 25A devices are easily installed or removed without the use of tools.
- Modular design allows easy installation of Series 320 Overload Relays and the complete range of Series 330 Motor Protection Circuit Breakers and accessories.
- Combination head terminal screws allow the use of straight, phillips, or posidrive screwdrivers. Allen head screws on 50A through 105A contactors make it easy to apply the proper terminal tightening torque for secure conductor connections.
- Snap-on front mounted auxiliary contacts install without the use of tools for lower installed costs. Single circuits available so you only purchase what you need.

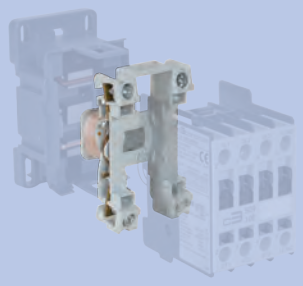

UNIQUE PRODUCT FEATURES

Multi-Point Terminal Coils

Four terminal coils on all 9A to 105A AC and DC operated contactors are easily accessible on contactor and overload relay assemblies or contactor and motor protection circuit breaker assemblies. The control circuit can be wired from the line side or the load side of the contactor, whichever is most convenient for the installation. Control circuit wire runs can be minimized, and the devices can be easily substituted in your existing equipment without disturbing or changing your control wires. So no matter what components are being used, Series 300 Contactors can be easily and quickly wired, reducing your labor and installation costs.

IT'S EASY TO BUILD YOUR OWN CONTACTOR

Simply pick the code number from each of the sections below and combine them to build your part number.

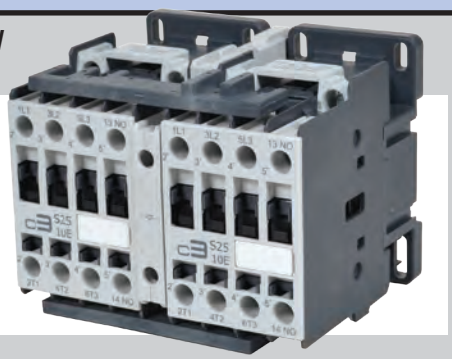

Reversing Contactors

_____ _____ _____ – _____
I *II* *III* *IV*

Example: To build one of our most popular Contactors, the part number would be **I + II + III + IV** or **310-S25N30D22**

I. REVERSING CONTACTORS (3 NORMALLY OPEN POLES)

	MAX. Ie (A)		RATINGS FOR SWITCHING AC MOTORS - AC-2, AC-3										
			kW (50Hz)				HP (60Hz)						
			3 PHASE				1 PHASE		3 PHASE				
CODE	AC-3	AC-1	230V	400/415V	500V	690V	115V	230V	200V	230V	460V	575V	LIST
310-S09N30	9	25	2.2	4	5.5	5.5	1/2	1-1/2	3	3	5	7-1/2	$ 214.00
310-S12N30	12	25	3	5.5	7.5	7.5	3/4	2	3	3	7-1/2	10	$ 266.00
310-S18N30	18	32	4	7.5	10	10	1	3	5	5	10	15	$ 282.00
310-S25N30	25	45	7.5	11	15	15	2	3	7-1/2	7-1/2	15	15	$ 342.00
310-S32N30	32	60	9	15	18.5	18.5	3	5	10	10	20	25	$ 415.00
310-S40N30	40	60	11	18.5	25	30	3	5	10	15	30	25	$ 511.00
310-S50N30	50	90	15	22	30	35	3	7-1/2	15	15	40	40	$ 769.00
310-S65N30	65	110	18.5	30	40	45	5	10	20	20	50	50	$ 901.00
310-S80N30	80	110	22	37	45	45	7-1/2	15	20	25	50	60	$1,011.00

II. COIL VOLTAGE CODE

AC COIL VOLTAGE CODES

VOLTAGE	12	24	48	110 / 120	208	220	230	240	277	400	400 ~ 415	480	500	550	600
50Hz	—	—	—	D	—	—	—	—	—	—	R	—	T	U	—
60Hz	—	—	—	D	L	—	—	F	P	—	—	R	—	—	T
50/60Hz	XB	XC	XJ	—	—	XAJ	XN	—	—	XAM	—	—	—	—	—

DC COIL VOLTAGE CODES

VOLTAGE	12	24	24 ~ 28	125	110 ~ 130	208 ~ 240	250	LIST
-S09 to -S25	ZB	ZC	—	ZQ	—	—	ZP	$ 70.00
-S32 to -S40	ZB	ZC	—	ZQ	—	—	ZP	$ 156.00
-S50 to -S80	—	—	EC	—	EL	EE	—	$ 564.00

III. AUXILIARY CONTACT CONFIGURATION

CODE	DESCRIPTION	LIST
00	Without Auxiliary Contacts (Contactors 310-S32 to 310-S80 only)	—
22	2 Normally Open (1 NO on Forward Contactor① and 1 NO on Reverse Contactor①) and 2 Normally Closed (1 NC on Forward Contactor② and 1 NC on Reverse Contactor②)	$ 47.00

① Integral right side mounted on 9A ~ 25A contactors, front mounted on 32A ~ 80A contactors.
② Integrated contacts as part of the electrical/mechanical interlock.

IV. OPTIONS

CODE	DESCRIPTION	FOR CONTACTOR	LIST (deduct)
(Blank)	With Power Wires	—	—
WW	Without Interconnecting Power Wires	-S09 to -S25 -S32 to -S40 -S50 to -S80	– $ 34.00 – $ 51.00 – $ 97.00

DISCOUNT SCHEDULE **F**

Reversing Contactors

c3controls Series 310 Reversing Contactors are ideal for reversing motors in applications where panel space is at a premium and device modularity is required to satisfy virtually any application requirement. cULus and CE Markings make them suitable for use anywhere in the world. A common mechanical interlock, power wiring modules, IP20 guarded terminals with dual terminal markings, and shared accessories help reduce your total installed costs and enhance the features and performance of your equipment. Just look and see what our Series 310 has to offer.

Product features include:

- High fault short circuit rating of 100kA @ 480V and 600V with Class J fuses, provides safety and reliability in high fault applications.
- Series 300 25A contactor has an integral – auxiliary, 3 power poles plus 1 auxiliary, provides more functionality in a smaller package, reducing bill of material and panel size.
- Modular design allows Series 320-B2 Overload Relays to be directly mounted onto Series 310, 9A to 25A, reversing contactors resulting in a high functioning compact starter.
- Removable and replaceable identification marker, standard on all c3controls contactors, simplifies troubleshooting in panels with many devices.
- Multi-point terminal coils on 9A to 80A AC and DC contactors providing wiring flexibility and installation convenience.
- Lower power consumption for 32A and 40A DC contactors.
- Series 330 Motor Protection Circuit Breakers direct mount onto Series 310, 9A to 40A AC and DC, reversing contactors, resulting in a high functioning compact starter.
- Modular design allows use with separately mounted overload relays, or Series 320 Overload Relays can be directly mounted on Series 310 32A to 50A reversing contactors without load-side interconnecting power wires.
- AC and DC operating coils for control circuit application flexibility. 50A to 80A DC operated devices feature electronic coil control.
- Environmentally friendly contacts are cadmium free and non-metallic materials are asbestos, halogen and cadmium free.
- IP20 guarded terminals prevent accidental contact with live parts.
- Dual IEC and NEMA terminal markings for ease of wiring anywhere in the world.
- Device identification marker for labeling contactors and front mounted auxiliary contacts simplify trouble shooting in panels without the use of tools.
- Power wiring modules provide reliable, rigid interconnections between the forward and reverse contactors.
- Combination head terminal screws allow the use of straight, phillips, or posidrive screwdrivers. Allen head screws on 50A through 80A contactors make it easy to apply the proper terminal tightening torque for secure conductor connections.
- Snap-on front mounted auxiliary contacts install without the use of tools for lower installed costs. Single circuits available so you only purchase what you need.

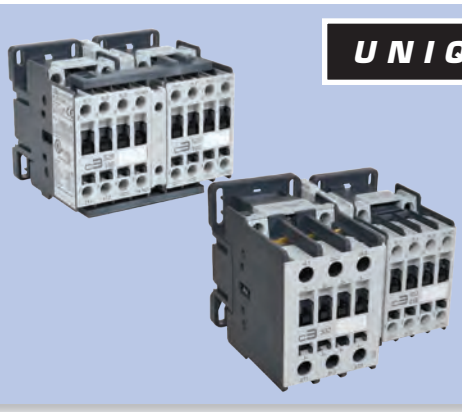

UNIQUE PRODUCT FEATURES

Series 310 Reversing Contactors feature a single, side mounted electrical and mechanical or mechanical only interlock that is used for the whole range of contactors, enabling a 9A contactor to be interlocked with a 105A contactor. The side mounted interlock doesn't increase the depth of the contactor and doesn't prevent front mounted auxiliary contacts from being added to either the forward or reverse contactors. Contactors are physically secured together with a dovetail bracket that installs from the bottom of the contactor – so it can't fall out when it is installed on a DIN rail or on a panel, even in high vibration applications. To complete the reversing contactor assembly, attractive, insulated wiring modules provide error free interconnections between the forward and reverse contactors. Simple to use, modular accessories make reversing contactors easy to assemble in the field – or order them factory assembled. Either way you'll get the performance and features you need for your reversing motor applications.

Some of Our Popular Configurations:

REVERSING CONTACTORS

CATALOG NUMBER	DESCRIPTION	LIST
310-S09N30D22	Reversing, 9A, 3 Pole, 120V AC Coil, 2 NO and 2 NC Auxiliary Contacts	$261.00
310-S09N30ZC22	Reversing, 9A, 3 Pole, 24V DC Coil, 2 NO and 2 NC Auxiliary Contacts	$331.00
310-S25N30D22	Reversing, 25A, 3 Pole, 120V AC Coil, 2 NO and 2 NC Auxiliary Contacts	$389.00
310-S25N30ZC22	Reversing, 25A, 3 Pole, 24V DC Coil, 2 NO and 2 NC Auxiliary Contacts	$459.00
310-S32N30D22	Reversing, 32A, 3 Pole, 120V AC Coil, 2 NO and 2 NC Auxiliary Contacts	$462.00

FRONT MOUNTED AUXILIARY CONTACTS

Our front mounted auxiliary contacts feature IP20 guarded terminals to protect against accidental contact with live parts. The device identification marker simplifies trouble shooting in panels with many contactors. These contacts snap-on and install without the use of tools. NOTE: See chart below for maximum number of front mounted auxiliary contacts.

CODE	CONTACT CONFIGURATION	CONNECTION DIAGRAM	LIST
300-SFA10	1 Normally Open	-3 NO / -4	$11.50
300-SFA01	1 Normally Closed	-1 NC / -2	$11.50
300-SFA10EM	1 Normally Open Early Make	-7 NO / -8	$17.00
300-SFA01DB	1 Normally Closed Delayed Break	-5 NC / -6	$17.00

MAXIMUM NUMBER OF FRONT OR SIDE MOUNTED AUXILIARY CONTACTS

CONTACTOR	MAXIMUM NUMBER
S09, S12, S18, S25	4
S32, S40	6
S50, S65, S80, S95, S105	8

WIRING MODULES

Reversing contactor power wiring modules make field assembly of reversing contactors easy. Line and load side over-molded copper bus bar conductors ensure error free installation and make for a rigid assembly with a mechanical interlock (300-SMI) or electrical/ mechanical interlock (300-SMEI).

CODE	FOR USE WITH CONTACTORS	LIST
300-RWS25	S09, S12, S18, S25	$40.00
300-RWS40	S32, S40	$51.00
300-RWS80	S50, S65, S80	$97.00

DISCOUNT SCHEDULE F

SIDE MOUNTED AUXILIARY CONTACTS

Side mounted auxiliary contacts feature IP20 guarded terminals to protect against accidental contact with live parts. NOTE: See chart at left for maximum number of side mounted auxiliary contacts.

CODE	CONTACT CONFIGURATION	CONNECTION DIAGRAM	LIST
300-SSA11	1 Normally Open and 1 Normally Closed	NO NC 13 14 21 22 31 32 / 43 44	$31.00
300-SSA20	2 Normally Open	NO NO 13 14 23 24 33 34 / 43 44	$31.00
300-SSA11X	1 Normally Open and 1 Normally Closed*	NO NC 53 54 61 62 71 72 / 83 84	$31.00
300-SSA20X	2 Normally Open*	NO NO 53 54 63 64 73 74 / 83 84	$31.00

*NOTE: For use with 300-SSA11 or 300-SSA20 when more than one side mounted auxiliary contact module is installed on the same side of the contactor.

INTERLOCKS

MECHANICAL INTERLOCK

Our side mounted mechanical interlock for use with reversing contactors, reversing starters, two-speed starters and star-delta (wye-delta) starters. This single interlock can be used with all size contactors from 9A ~ 105A, preventing the forward and reverse contactors from being energized at the same time.

ELECTRICAL & MECHANICAL INTERLOCK

c3controls electrical/mechanical interlock for reversing contactors has the same features as the mechanical interlock but also has two normally closed auxiliaries built into the unit for electrical interlocking, eliminating the need for two normally closed auxiliary contacts and the mechanical interlock. The result of integrating the normally closed auxiliary contact is decreased width of reversing contactors and more available auxiliary contact locations.

CODE	DESCRIPTION	LIST
300-SMI	Side Mounted Mechanical Interlock	$34.00
300-SMEI	Side Mounted Electrical/Mechanical Interlock	$43.00

Accessories for Non-Reversing and Reversing Contactors

The complete range of Series 300 Non-Reversing Contactors and Series 310 Reversing Contactors share common accessories including single circuit front mounted auxiliary contacts, two circuit side mounted auxiliary contacts, a single electrical/mechanical or mechanical interlock, and coil mounted surge suppressors. Designing starter assemblies and panels is easy – you don't have to remember which auxiliary is required for each contactor, they all work together. Installation is easy too – once you learn how to install each accessory, it's always the same no matter what contactor it's being installed on. If simple design and assembly isn't enough – you'll also reduce your inventory and maximize its flexibility, because unique accessories are not required for each size contactor.

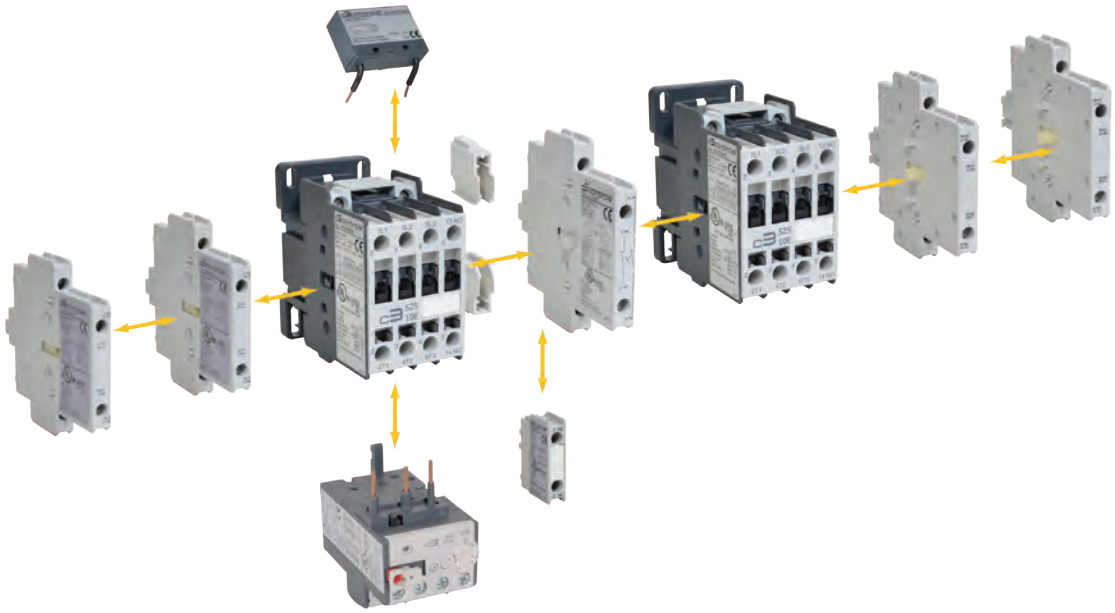

SURGE SUPPRESSORS

Coil mounted surge suppressors protect sensitive electronic components in control circuits from damaging line voltage spikes.

DISCOUNT SCHEDULE F

RC SURGE SUPPRESSOR

CODE	VOLTAGE RANGE		FOR USE WITH CONTACTOR	LIST
300-SRCS2J	24 ~ 48V AC	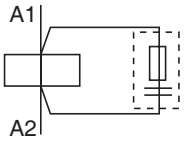	S09, S12, S18, S25, S32, S40	$29.00
300-SRCS2AH	50 ~ 127V AC		S09, S12, S18, S25, S32, S40	$29.00
300-SRCS2M	130 ~ 250V AC		S09, S12, S18, S25, S32, S40	$29.00
300-SRCS5J	24 ~ 48V AC		S50, S65, S80, S95, S105	$29.00
300-SRCS5AH	50 ~ 127V AC		S50, S65, S80, S95, S105	$29.00
300-SRCS5M	130 ~ 250V AC		S50, S65, S80, S95, S105	$29.00

DIODE SURGE SUPPRESSOR

CODE	VOLTAGE RANGE		FOR USE WITH CONTACTOR	LIST
300-SDS5T	12 ~ 600V DC	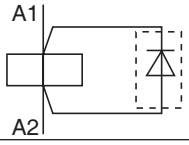	S09, S12, S18, S25, S32, S40, S50, S65, S80, S95, S105	$29.00

IT'S EASY TO BUILD YOUR OWN OPERATING COIL

Simply pick the code number from each of the sections below and combine them to build your part number.

Operating Coils

I II

Example: To build one of our most popular Operating Coils, the part number would be **I + II** or **ACS25D**

I. OPERATING COIL TYPE

CODE	DESCRIPTION	FOR USE WITH CONTACTORS	LIST
ACS25	AC Operating Coil	S09, S12, S18, S25	$ 26.00
ACS40	AC Operating Coil	S32, S40	$ 30.00
ACS105	AC Operating Coil	S50, S65, S80, S95, S105	$ 42.00
DCS25	DC Operating Coil	S09, S12, S18, S25	$ 53.00
DCS40	DC Operating Coil	S32, S40	$141.00
DCS105	DC Operating Coil	S50, S65, S80, S95, S105	$211.00

II. COIL VOLTAGE CODE

AC COIL VOLTAGE CODES

VOLTAGE	12	24	48	110 / 120	208	220	230	240	277	400	400 ~ 415	480	500	550	600
50Hz	—	—	—	D	—	—	—	—	—	—	R	—	T	U	—
60Hz	—	—	—	D	L	—	—	F	P	—	—	R	—	—	T
50/60Hz	XB	XC	XJ	—	—	XAJ	XN	—	—	XAM	—	—	—	—	—

DC COIL VOLTAGE CODES

VOLTAGE	12	24	24 ~ 28	125	110 ~ 130	208 ~ 240	250
-S09 to -S25	ZB	ZC	—	ZQ	—	—	ZP
-S32 to -S40	ZB	ZC	—	ZQ	—	—	ZP
-S50 to -S105	—	—	EC	—	EL	EE	—

DISCOUNT SCHEDULE F

SPECIFICATIONS:

ELECTRICAL SPECIFICATIONS												
		S09	S12	S18	S25	S32	S40	S50	S65	S80	S95	S105
ELECTRICAL GENERAL												
	UNITS											
Rated Operating Frequency	Hz	25 ~ 400										
Impedance per Pole	mΩ	1.90	1.90	1.60	1.60	2.10	1.60	0.85	0.86	0.86	0.76	0.76
POWER DISSIPATION PER POLE												
AC-1	W	1.47	1.47	2.46	3.34	4.60	3.42	6.89	10.40	10.40	14.89	14.89
AC-3	W	0.19	0.34	0.78	1.03	1.31	1.52	2.12	3.63	5.50	6.86	8.37
Rated Coil Frequencies		AC: 50Hz, 60Hz, 50/60Hz and DC										
ELECTRICAL UL/CSA APPLICATIONS												
Rated Operating Voltage, Ue	VAC	600										
General Purpose Current Rating	A	25	25	40	40	60	60	90	110	110	140	140
RATED 1 PHASE OPERATING CURRENT, Ie												
115V	A	9.8	13.8	16	24	34	34	34	56	80	80	100
230V	A	10	12	17	28	28	28	40	40	50	60	88
RATED 1 PHASE OPERATING POWER, Pe												
115V	HP	1/2	3/4	1	2	3	3	3	5	7-1/2	7-1/2	10
230V	HP	1-1/2	2	3	3	5	5	7-1/2	10	15	15	20
RATED 3 PHASE OPERATING CURRENT, Ie												
200V	A	11	11	17.5	25.3	32.2	32.2	48.3	62.1	62.1	78.2	92
230V	A	9.6	9.6	15.2	22	28	42	42	54	68	80	104
460V	A	7.6	11	14	21	27	40	52	65	65	77	96
575V	A	9	11	17	17	27	27	41	52	62	77	77
RATED 3 PHASE OPERATING POWER, Pe												
200V	HP	3	3	5	7-1/2	10	10	15	20	20	25	30
230V	HP	3	3	5	7-1/2	10	15	15	20	25	30	40
460V	HP	5	7-1/2	10	15	20	30	40	50	50	60	75
575V	HP	7-1/2	10	15	15	25	25	40	50	60	75	75
Size		00	—	0	—	1	—	2	—	—	3	—
Standard Short Circuit Current	kA	5	5	5	5	5	5	10	10	10	10	10
Maximum Fuse Size	A	30	30	60	60	60	60	100	125	150	175	200
High Fault Short Circuit Current	kA	100	100	100	100	100	100	100	100	100	100	100
Maximum Fuse Size (Class J)	A	25	25	40	40	50	60	90	100	125	150	175
Electrical Endurance, AC-3 at Maximum Rated 3 Phase Operating Power (@460V)	Ops. (mill.)	1.8	2.0	1.6	1.6	1.5	1.5	1.6	1.8	1.5	1.5	1.0
ELECTRICAL IEC APPLICATIONS												
Rated Insulation Voltage, Ui	V	1000										
Rated Impulse Voltage Withstand, Uimp	kV	6	6	6	6	6	6	8	8	8	8	8
Rated Operating Voltage, Ue	VAC	690										
Rated Thermal Current, Ith for Ambient Temperature < 55° C (131° F)	A	25	25	32	45	60	60	90	110	110	140	140
RATED AC-1 OPERATING CURRENT, Ie												
At 55° C (131° F)	A	25	25	32	45	60	60	90	110	110	140	140
At 70° C (158° F)	A	20	20	25	32	48	48	72	88	88	110	110
RATED AC-3 OPERATING CURRENT, Ie												
220 ~ 240V	A	9	12	18	25	32	40	50	65	80	95	105
380 ~ 400V	A	9	12	18	25	32	40	50	65	80	95	105
415 ~ 440V	A	9	12	18	25	32	40	50	65	80	95	105
500V	A	7.5	10.5	14	19	24	32	38	55	63	79	85
660 ~ 690V	A	7	9	13	15	22	25	34	44	48	60	80
RATED 3 PHASE AC-3 OPERATING POWER, Pe												
220 ~ 240V	kW	2.2	3	4	6.5	9	11	15	18.5	22	25	30
380 ~ 400V	kW	4	5.5	7.5	11	15	18.5	22	30	37	45	55
415 ~ 440V	kW	4	5.5	9	12.5	15	22	30	37	45	55	55
500V	kW	5.5	7.5	10	15	18.5	25	30	40	45	55	65
660 ~ 690V	kW	5.5	7.5	10	15	18.5	30	33	45	45	55	65

ELECTRICAL AND COIL CHARACTERISTICS SPECIFICATIONS

		S09	S12	S18	S25	S32	S40	S50	S65	S80	S95	S105
ELECTRICAL IEC APPLICATIONS (CONTINUED)												
	UNITS											
RATED AC-4 OPERATING CURRENT, Ie (Achieves maximum of 200,000 operations)												
220 ~ 240V	A	7.5	10.0	15.0	20.8	26.7	33.3	41.7	54.2	66.7	79.2	87.5
380 ~ 400V	A	7.5	10.0	15.0	20.8	26.7	33.3	41.7	54.2	66.7	79.2	87.5
415 ~ 440V	A	7.5	10.0	15.0	20.8	26.7	33.3	41.7	54.2	66.7	79.2	87.5
500V	A	6.3	8.8	11.7	15.8	20.0	26.7	31.7	45.8	52.5	65.8	70.8
660 ~ 690V	A	5.8	7.6	10.8	12.5	18.3	20.8	28.3	36.7	40.0	50.0	66.7
RATED AC-4 OPERATING POWER, Pe (Achieves maximum of 200,000 operations)												
220 ~ 240V	kW	1.5	2.2	4.0	5.5	5.5	7.5	11.0	15.0	18.5	22.0	22.0
380 ~ 400V	kW	3.0	4.0	5.5	7.5	11.0	15.0	22.0	22.0	37.0	37.0	45.0
415 ~ 440V	kW	3.0	4.0	5.5	7.5	11.0	15.0	22.0	22.0	37.0	37.0	45.0
500V	kW	3.0	4.0	5.5	7.5	11.0	15.0	22.0	22.0	37.0	37.0	45.0
660 ~ 690V	kW	4.0	5.5	7.5	7.5	15.0	18.5	22.0	30.0	37.0	45.0	55.0
RATED AC-4 OPERATING CURRENT, Ie (Achieves maximum of 1,000,000 operations)												
220 ~ 240V	A	2.7	3.6	5.5	7.6	9.7	12.1	15.2	19.7	24.2	28.8	31.8
380 ~ 400V	A	2.7	3.6	5.5	7.6	9.7	12.1	15.2	19.7	24.2	28.8	31.8
415 ~ 440V	A	2.7	3.6	5.5	7.6	9.7	12.1	15.2	19.7	24.2	28.8	31.8
500V	A	2.3	3.2	4.2	5.8	7.3	9.7	11.5	16.7	19.1	23.9	25.8
660 ~ 690V	A	2.1	2.7	3.9	4.5	6.7	7.6	10.3	13.3	14.5	18.2	24.2
RATED AC-4 OPERATING POWER, Pe (Achieves maximum of 1,000,000 operations)												
220 ~ 240V	kW	0.55	0.75	1.1	1.5	2.2	3.0	4.0	4.0	5.5	7.5	7.5
380 ~ 400V	kW	1.1	1.5	2.2	3.0	4.0	5.5	5.5	7.5	11.0	11.0	15.0
415 ~ 440V	kW	1.1	1.5	2.2	3.0	4.0	5.5	5.5	7.5	11.0	11.0	15.0
500V	kW	1.1	1.5	2.2	3.0	4.0	5.5	5.5	7.5	11.0	11.0	15.0
660 ~ 690V	kW	1.5	1.5	3.0	3.0	5.5	5.5	7.5	11.0	11.0	15.0	22.0
RATED SHORT-TIME CURRENT, Icw												
1 Second	A	455	455	570	630	1010	1265	1580	2530	2530	3300	3300
5 Seconds	A	205	205	254	280	450	450	710	1130	1130	1485	1485
10 Seconds	A	144	144	180	200	320	400	500	800	800	1050	1050
30 Seconds	A	85	85	104	115	185	230	290	460	460	600	600
1 Minute	A	60	60	74	80	130	165	205	325	325	430	430
3 Minutes	A	35	35	46	50	90	100	120	185	185	250	250
Short Circuit Protection with Fuses (gG/gL) Ue ≤ 690V												
Type 1	A	50	50	63	63	100	125	200	200	200	250	250
Type 2	A	25	35	35	50	63	80	100	125	125	160	200
MAXIMUM ELECTRICAL SWITCHING RATE												
AC-1	Ops./hr.	1200	1200	1200	1200	1200	1200	1200	1200	1200	600	600
AC-3	Ops./hr.	1200	1200	1200	1200	1200	1200	1200	1200	1200	600	600
AC-4	Ops./hr.	360	360	360	360	360	200	200	200	200	200	200
Electrical Endurance, AC-3 at Maximum Rated 3 Phase Operating Power (@400V)	Ops. (mill.)	1.6	1.8	1.3	1.4	1.3	1.3	1.2	1.4	1.2	1.2	1.0
Making Capacity	A	450	450	450	450	550	550	1000	1000	1000	1280	1280
BREAKING CAPACITY												
Ue ≤ 400V	A	250	250	250	250	450	450	920	920	920	1050	1050
Ue = 500V	A	250	250	250	250	450	450	920	920	920	1050	1050
Ue = 690V	A	130	130	130	130	170	205	780	780	780	950	950
COIL CHARACTERISTICS												
Rated Insulation Voltage, Ui	V	1000										
OPERATING LIMITS												
50HZ, 60HZ, 50/60HZ												
Operating	xUc	0.80 ~ 1.10										
Pick-Up	xUc	0.60 ~ 0.80	0.60 ~ 0.80	0.60 ~ 0.80	0.60 ~ 0.80	0.60 ~ 0.80	0.60 ~ 0.80	0.65 ~ 0.80	0.65 ~ 0.80	0.65 ~ 0.80	0.65 ~ 0.80	0.65 ~ 0.80
Drop-Out	xUc	0.35 ~ 0.55	0.35 ~ 0.55	0.35 ~ 0.55	0.35 ~ 0.55	0.40 ~ 0.60	0.40 ~ 0.60	0.40 ~ 0.60	0.40 ~ 0.60	0.40 ~ 0.60	0.40 ~ 0.60	0.40 ~ 0.60

MECHANICAL, ENVIRONMENTAL AND CONSTRUCTION SPECIFICATIONS

		S09	S12	S18	S25	S32	S40	S50	S65	S80	S95	S105
COIL CHARACTERISTICS (CONTINUED)												
	UNITS											
DC												
Operating	xUc	0.80 ~ 1.10										
Pick-Up	xUc	0.45 ~ 0.65	0.45 ~ 0.65	0.45 ~ 0.65	0.45 ~ 0.65	0.45 ~ 0.75	0.45 ~ 0.75	0.70 ~ 0.80	0.70 ~ 0.80	0.70 ~ 0.80	0.70 ~ 0.80	0.70 ~ 0.80
Drop-Out	xUc	0.15 ~ 0.30	0.15 ~ 0.30	0.15 ~ 0.30	0.15 ~ 0.30	0.15 ~ 0.30	0.15 ~ 0.30	0.40 ~ 0.60	0.40 ~ 0.60	0.40 ~ 0.60	0.40 ~ 0.60	0.40 ~ 0.60
COIL CONSUMPTION												
50HZ, 60HZ, 50/60HZ												
Pick-Up	VA	50 ~ 70	50 ~ 70	50 ~ 70	50 ~ 70	70 ~ 90	70 ~ 90	250 ~ 275	250 ~ 275	250 ~ 275	250 ~ 275	250 ~ 275
Hold-In	VA	7 ~ 11	7 ~ 11	7 ~ 11	7 ~ 11	9 ~ 13	9 ~ 13	16 ~ 20	16 ~ 20	16 ~ 20	16 ~ 20	16 ~ 20
DC												
Pick-Up	W	5 ~ 9	5 ~ 9	5 ~ 9	5 ~ 9	7 ~ 10	7 ~ 10	340	340	340	340	340
Hold-In	W	5 ~ 9	5 ~ 9	5 ~ 9	5 ~ 9	7 ~ 10	7 ~ 10	6.5	6.5	6.5	6.5	6.5
OPERATING TIMES												
AC												
Pick-Up	msec.	8 ~ 20	8 ~ 20	8 ~ 20	8 ~ 20	10 ~ 19	10 ~ 19	15 ~ 30	15 ~ 30	15 ~ 30	15 ~ 30	15 ~ 30
Drop-Out	msec.	6 ~ 13	6 ~ 13	6 ~ 13	6 ~ 13	5 ~ 25	5 ~ 25	9 ~ 15	9 ~ 15	9 ~ 15	9 ~ 15	9 ~ 15
DC												
Pick-Up	msec.	35 ~ 45	35 ~ 45	35 ~ 45	35 ~ 45	40 ~ 55	40 ~ 55	50 ~ 60	50 ~ 60	50 ~ 60	50 ~ 60	50 ~ 60
Drop-Out	msec.	7 ~ 12	7 ~ 12	7 ~ 12	7 ~ 12	30 ~ 65	30 ~ 65	55 ~ 60	55 ~ 60	55 ~ 60	55 ~ 60	55 ~ 60
POWER DISSIPATION												
50Hz, 60Hz, 50/60Hz	W	2.6	2.6	2.6	2.6	4.3	4.3	8.0	8.0	8.0	8.0	8.0
POWER FACTOR												
Closed	cos(ρ	0.33	0.33	0.33	0.33	0.28	0.28	0.26	0.26	0.26	0.26	0.26
Open	cos(ρ	0.84	0.84	0.84	0.84	0.73	0.73	0.54	0.54	0.54	0.54	0.54
MECHANICAL												
Mechanical Endurance	Ops. (mill.)	10										
Maximum Mechanical Switching Rate	Ops./ hr.	9,000										
ENVIRONMENTAL												
Ambient Operating Temperature	°C / °F	-25 to +55 / -13 to +131										
Ambient Storage Temperature	°C / °F	-55 to +80 / -58 to +176										
Altitude	m / ft.	3,000 / 9,792										
CONSTRUCTION GENERAL												
Pollution Degree		3	3	3	3	3	3	3	3	3	3	3
INGRESS PROTECTION												
Main Terminals		IP20	IP20	IP20	IP20*	IP20*	IP20*	IP20*	IP20*	IP20*	IP20*	IP20*
Coil Terminals		IP20	IP20	IP20	IP20	IP20	IP20	IP20	IP20	IP20	IP20	IP20
Auxiliary Contact Terminals		IP20	IP20	IP20	IP20	IP20	IP20	IP20	IP20	IP20	IP20	IP20
Weight	kg	0.295	0.295	0.295	0.295	0.52	0.54	1.105	1.12	1.13	1.45	1.47
	lbs.	0.65	0.65	0.65	0.65	1.15	1.19	2.44	2.47	2.49	3.20	3.24

*NOTE: With conductors connected.

ROHS COMPLIANCE		For RoHS compliance documentation by product, refer to www.c3controls.com.
CONSTRUCTION CONDUCTOR CROSS-SECTIONS, MAIN TERMINALS		
		S09 - S25 / **S32 - S40** / **S50 - S80** / **S95 - S105**
	UNITS	
MAIN TERMINAL CAPACITY		
Solid Stranded and Finely Stranded without End Sleeve	mm^2	2 x 0.5 ~ 6 / 2 x 1 ~ 14 / 2 x 1 ~ 34 / 2 x 1 ~ 43
AWG Wire	AWG	2 x 20 ~ 10, 1 x 20 ~ 8* / 2 x 18 ~ 6 / 2 x 16 ~ 2 / 2 x 16 ~ 1
Recommended Strip Length	mm	8.5 / 10 / 13 / 15
	in	5/16 / 3/8 / 1/2 / 9/16
Tightening Torque	Lb-in.	8.8 ~ 16.9 / 22.1 ~ 26.6 / 35.4 ~ 53.1 / 44.3 ~ 57.5
	Nm	1.0 ~ 1.9 / 2.5 ~ 3.0 / 4.0 ~ 6.0 / 5.0 ~ 6.5
Screwdriver		Phillips nr. 2 / Phillips nr. 2 / Allen 4mm / Allen 4mm

AUXILIARY CONTACTS SPECIFICATIONS

		INTERNAL AUXILIARY CONTACT	CONTACT BLOCKS
		S09-S25	300-SFA & 300-SSA
ELECTRICAL GENERAL			
	UNITS		
Minimum Switching Capacity		5mA @ 17V	
Electrical Endurance	Ops. (mill.)	1	
Mechanical Endurance	Ops. (mill.)	15	
Non-Overlap Time	msec.	1.5	
Insulation Resistance	MΩ	>10	
ELECTRICAL UL/CSA APPLICATIONS			
Rated Operating Voltage, Ue	V	600	
PILOT DUTY RATING			
AC		A600	
DC		P600	Q600
ELECTRICAL IEC APPLICATIONS			
Rated Insulation Voltage, Ui	V	1000	
Rated Operating Voltage, Ue	V	690	
Rated Thermal Current, Ith for Ambient Temperature <55° C	A	20	10
RATED AC-15 OPERATING CURRENT, Ie			
110 ~ 120V	A	10	6
220 ~ 240V	A	10	6
380 ~ 400V	A	6	4
415 ~ 450V	A	5	3.5
500V	A	4	2.5
600 ~ 690V	A	2	1.5
RATED DC-13 OPERATING CURRENT, Ie			
24V	A	6	6
48V	A	4	4
110V	A	2	2
220V	A	0.7	0.7
440V	A	0.7	0.3
MAKING CAPACITY, Im			
AC-15/AC-11 Ue ≤ 400V 50/60Hz	A	250	90
DC-13/DC-11 Ue ≤ 220V	A	250	90
BREAKING CAPACITY, Im			
AC-15/AC-11 Ue ≤ 400V 50/60Hz	A	250	60
DC-13/DC-11 Ue ≤ 220V	A	2	0.95
Short Circuit Protection with Fuses (gG/gL)	A	10	10
ROHS COMPLIANCE		For RoHS compliance documentation by product, refer to www.c3controls.com.	

OPERATING POSITIONS

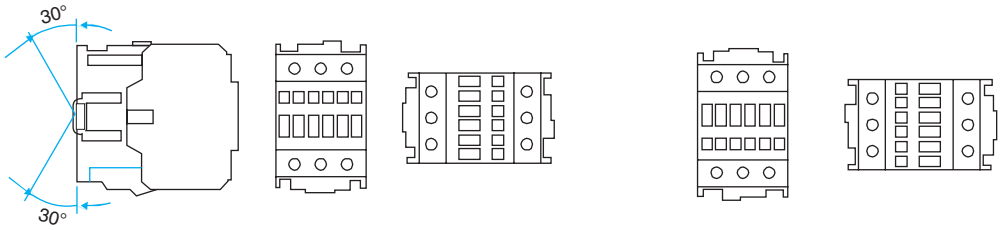

SERIES 300 NON-REVERSING CONTACTOR CIRCUIT DIAGRAMS

POWER CIRCUIT

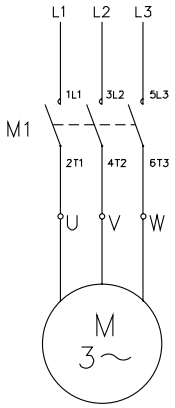

CONTROL CIRCUIT

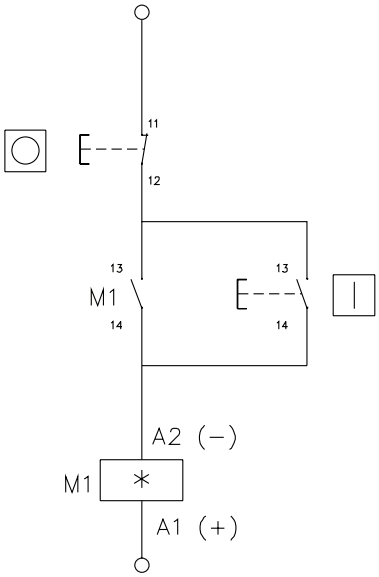

M1 = Contactor
I = Start Push Button
O = Emergency Stop Push Button
* = Coil Voltage Code

SERIES 310 REVERSING CONTACTOR CIRCUIT DIAGRAMS

POWER CIRCUIT

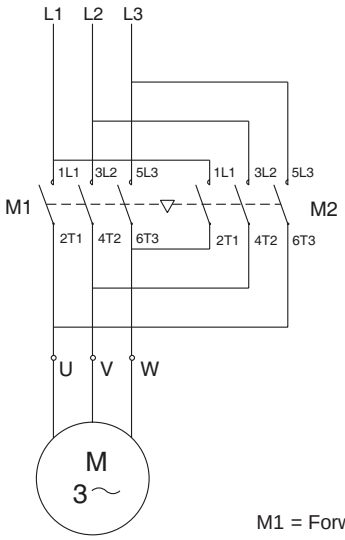

CONTROL CIRCUIT

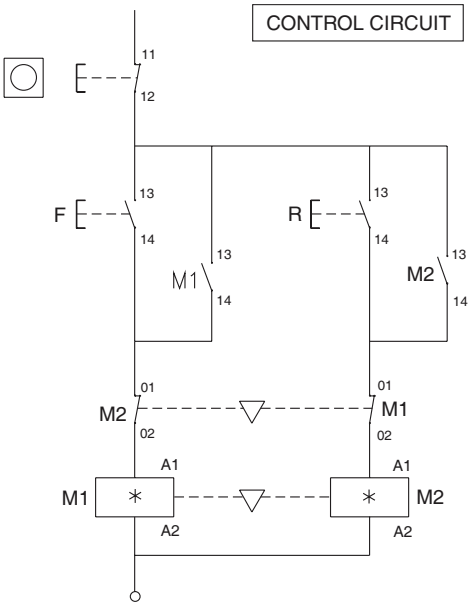

M1 = Forward Contactor
F = Forward Push Button
M2 = Reverse Contactor
R = Reverse Push Button
O = Emergency Stop Push Button
* = Coil Voltage Code

ELECTRICAL LIFE IN UTILIZATION CATEGORY

To find a contactor's estimated life:

1. Identify the utilization category of the application.
2. Refer to the chart for the applicable utilization category.
3. Locate the intersection of the life-load curve for the contactor selected with the application breaking current (Ie) on the horizontal axis of the chart.
4. Read the estimated contactor life from the vertical axis of the chart.

The life-load curves are based on tests in accordance with IEC 60947-4-1. Many conditions of an actual application effect contact life such as the environment and duty cycle. Therefore, the actual contact life may vary from the life indicated by the curves shown here.

NOTE: **Represents the Non-Reversing or Reversing Contactor Code. Refer to Pages 6 & 8.

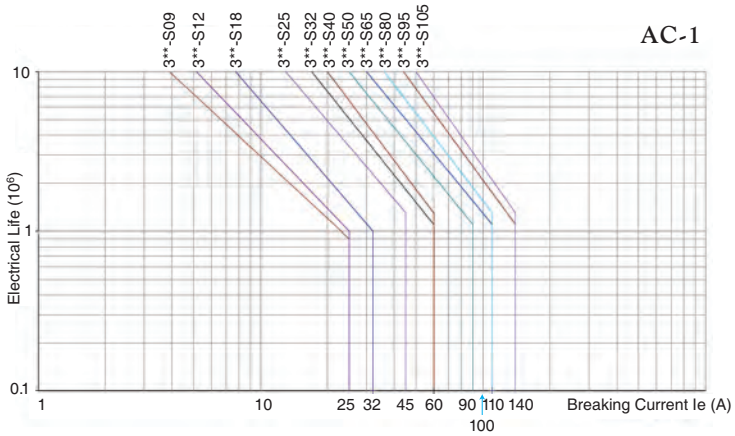

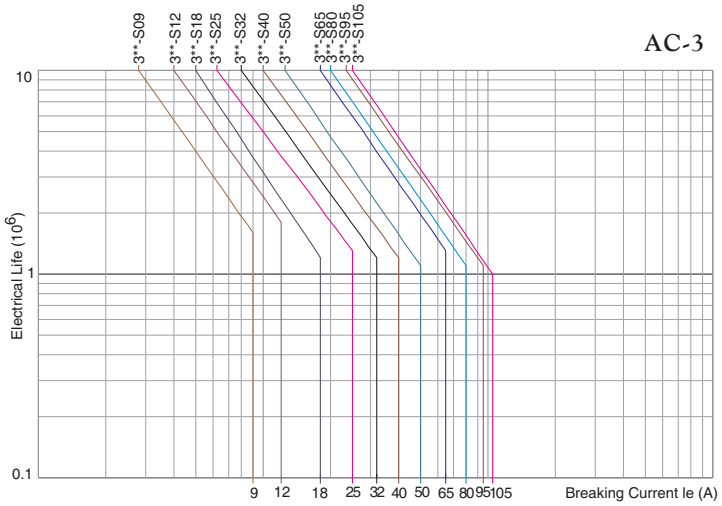

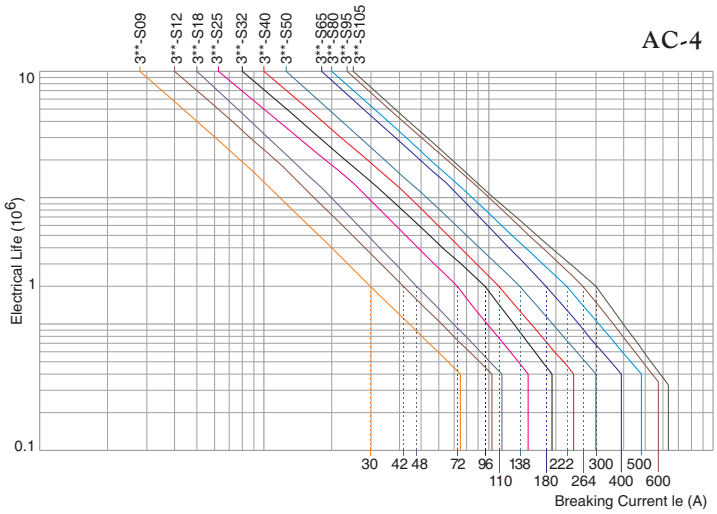

3 POLE NON-REVERSING CONTACTORS - AC COILS

300-S09, 300-S12, 300-S18 & 300-S25

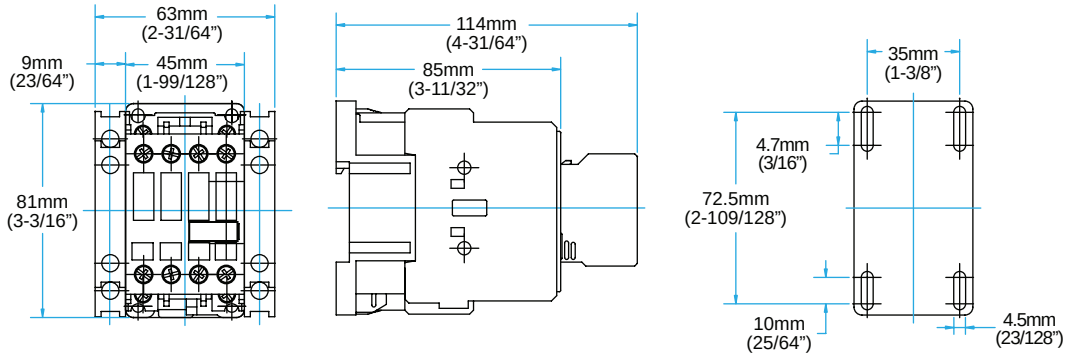

300-S32 & 300-S40

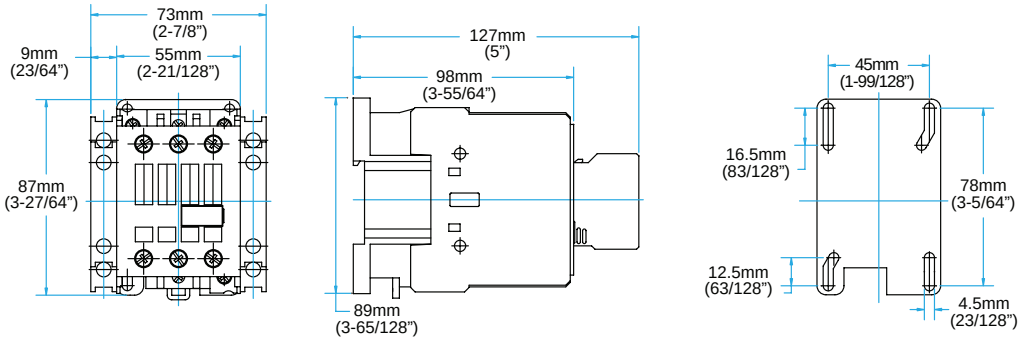

300-S50, 300-S65 & 300-S80

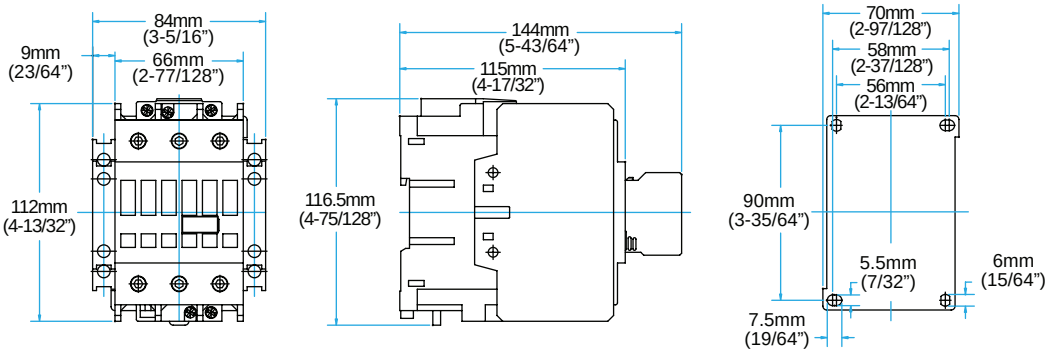

300-S95 & 300-S105

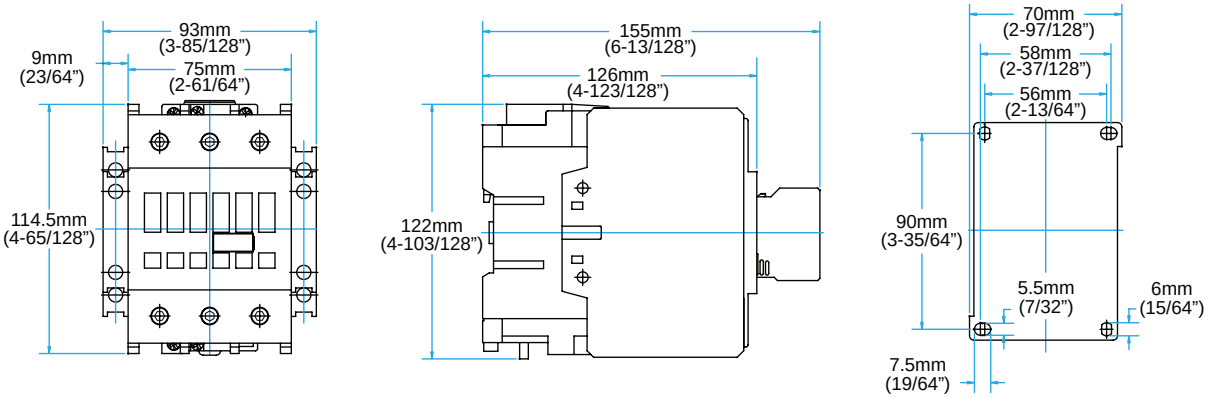

3 POLE NON-REVERSING CONTACTORS - DC COILS

300-S09, 300-S12, 300-S18 & 300-S25

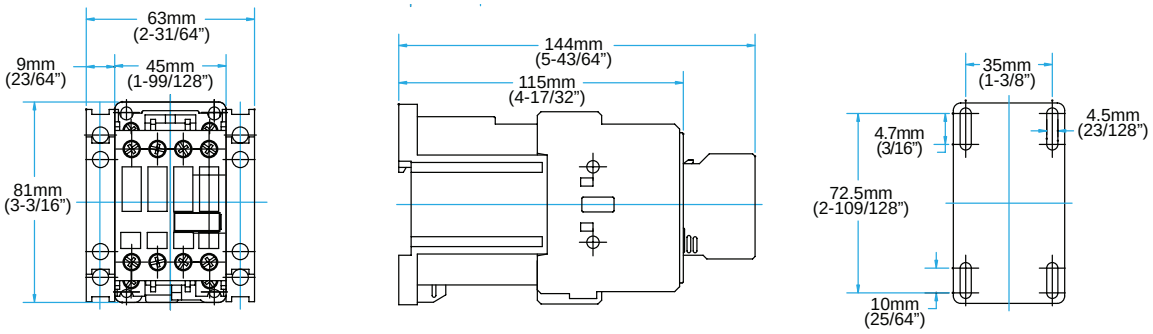

300-S32 & 300-S40

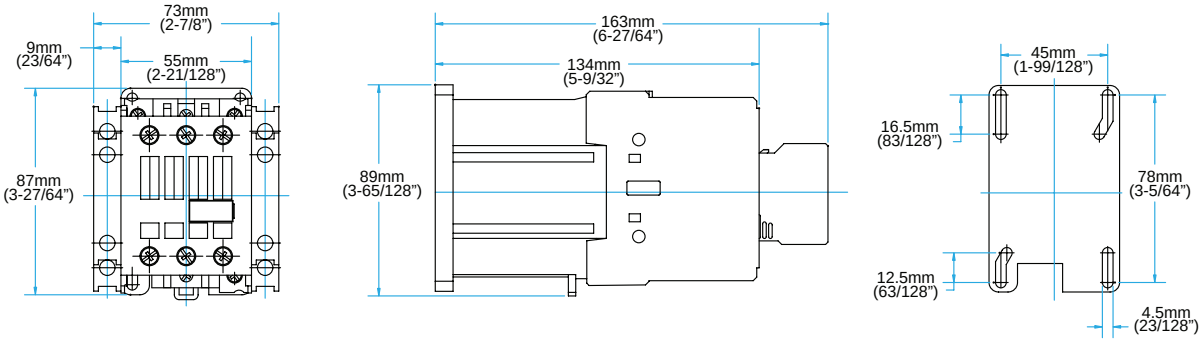

300-S50, 300-S65 & 300-S80

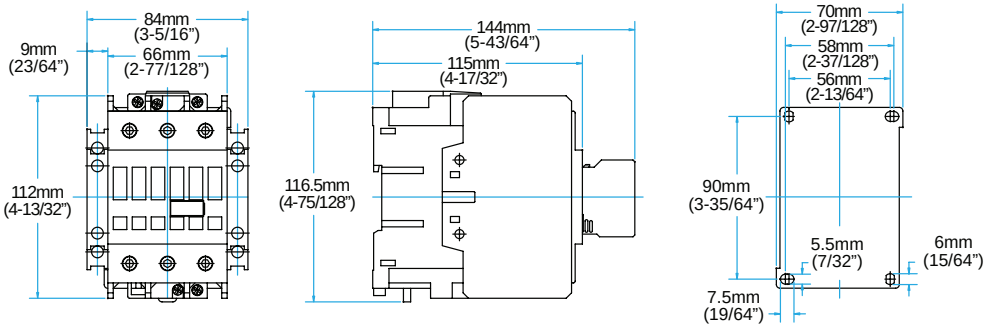

300-S95 & 300-S105

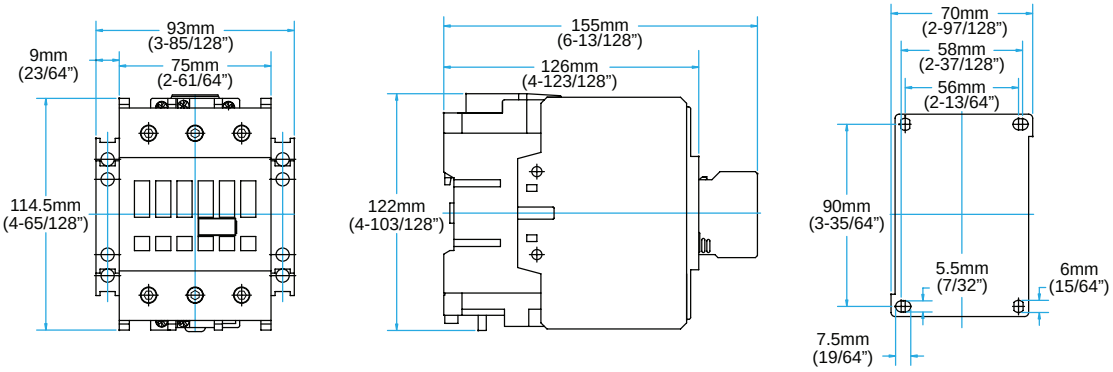

3 POLE CONTACTORS WITH ELECTRICAL/ MECHANICAL OR MECHANICAL INTERLOCK - AC COILS

310-S09, 310-S12, 310-S18 & 310-S25

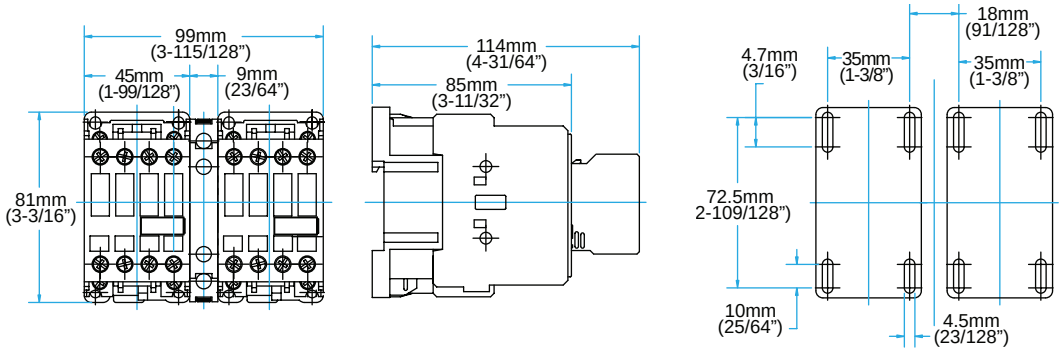

310-S32 & 310-S40

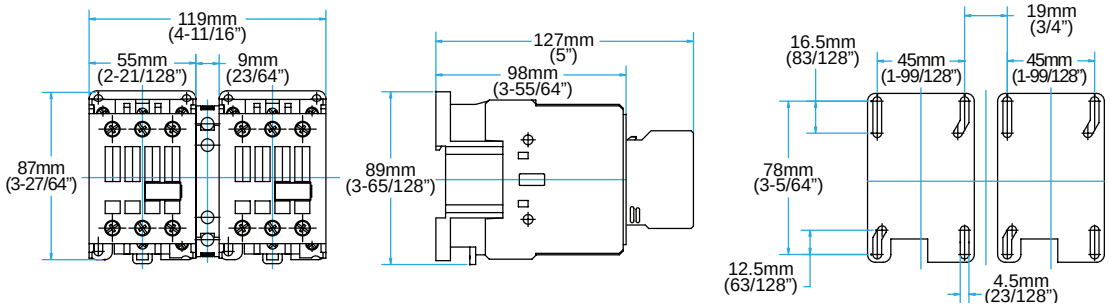

310-S50, 310-S65 & 310-S80

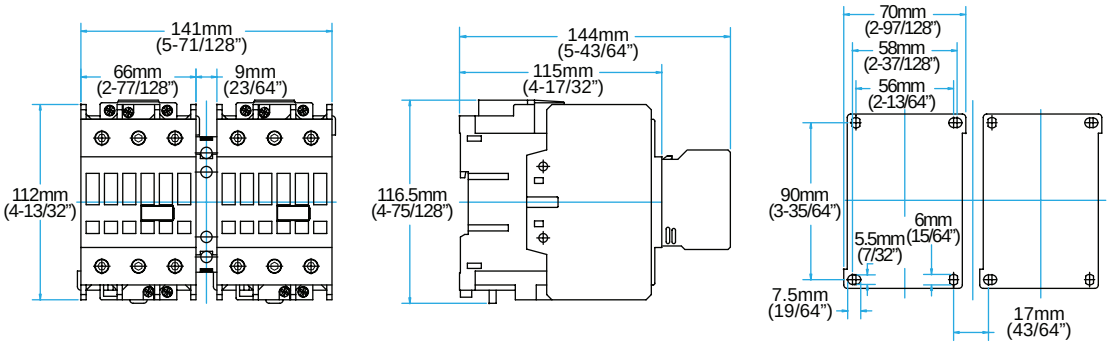

310-S95 & 310-S105

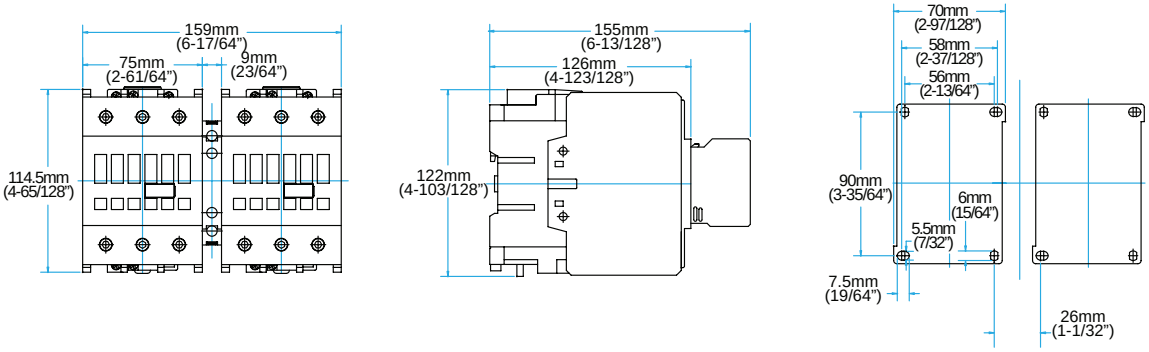

3 POLE CONTACTORS WITH ELECTRICAL/MECHANICAL OR MECHANICAL INTERLOCK - DC COILS

310-S09, 310-S12, 310-S18 & 310-S25

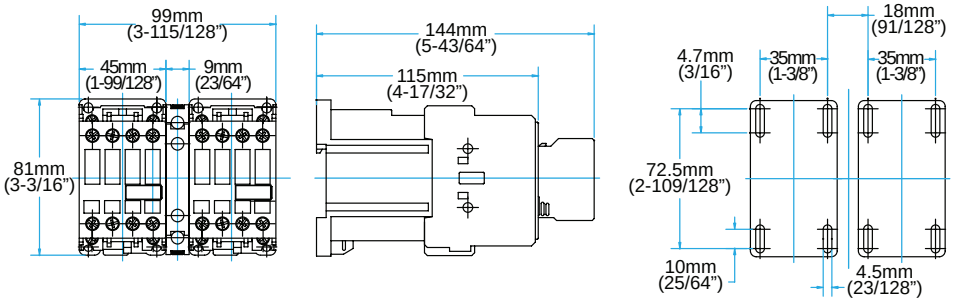

310-S32 & 310-S40

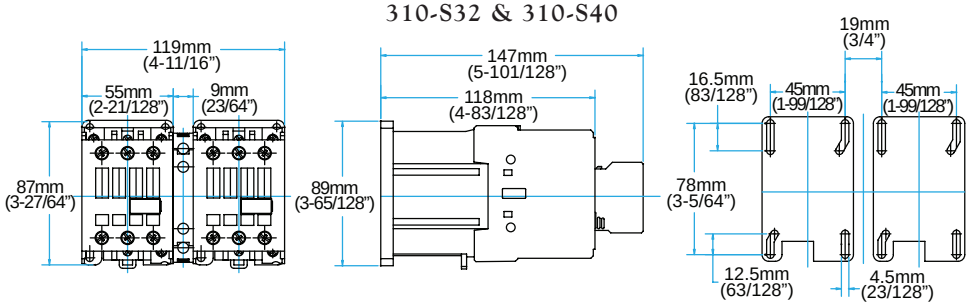

310-S50, 310-S65 & 310-S80

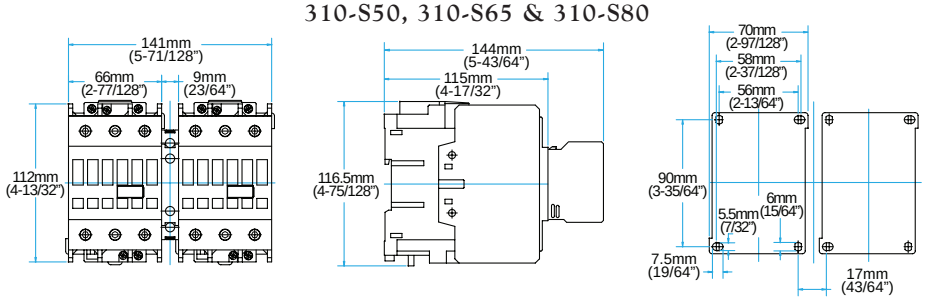

310-S95 & 310-S105

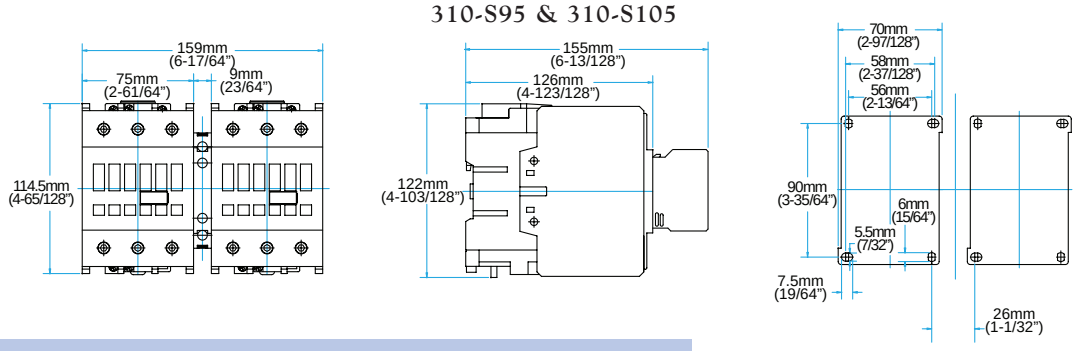

VISIT WWW.C3CONTROLS.COM TO DOWNLOAD CAD DRAWINGS

MINIATURE CONTACTORS & CONTROL RELAYS

series 300 miniature

series 310 miniature

When you need reliable motor control and control relays for your control panel, but standard size devices are just too big, look to c3controls. Our Series 300 and Series 310 Miniature Contactors and Series 300 Control Relays are compact in size, available with AC or DC coils, and offer a wide variety of accessories including auxiliary contacts, electronic timers, reversing contactor modules, and more. Small in size, big in performance! It's just another c3controls advantage!

Section 5

Miniature Non-Reversing Contactors	6
Miniature Reversing Contactors	7
Miniature Control Relays	9
Replacement Components	10
Accessories	11
Specifications	12
Dimensions	16

PROVEN

Conformity to Standards:

MINIATURE CONTACTORS

UL 508, 60947-4-1

CSA C22.2 No. 14

IEC 60947-1, 60947-4-1

MINIATURE CONTROL RELAYS

UL 508

CSA C22.2 No. 14

IEC 60947-1, 60947-5-1

Certifications:

UL File #: E236197 (Guide NLDX, NLDX7), E68568 (Guide NKCR, NKCR7)

CE Marked (per EU Low Voltage Directive 2006/95/EC and RoHS Directive 2011/65/EU)

UL File #: E68568 (Guide NKCR, NKCR7)

CE Marked (per EU Low Voltage Directive 2006/95/EC and RoHS Directive 2011/65/EU)

Visit www.c3controls.com to download product certifications.

NOTE: The scope (range, description, price, specifications, dimensions, etc.) of the product featured in this section is subject to change without notice. Refer to www.c3controls.com for product updates.

MINIATURE CONTACTORS & CONTROL RELAYS

c3controls offers a comprehensive line of Motor Control products designed and manufactured to meet the needs of the machine builder. We promise durable products at a price that gives you an edge, and we guarantee same-day shipping. Check out all the features of our Series 300/310 Miniature Contactors and Control Relays below!

DELIVERING SUPERIOR PRODUCT QUALITY AND MANUFACTURING EXCELLENCE

✓ **Proven**	Our Series 300 Miniature Non-Reversing Contactors and Control Relays and Series 310 Miniature Reversing Contactors are UL Listed and CE marked, meeting global standards requirements.
✓ **Lower Cost**	Snap-on, front mounted auxiliary contacts install without the use of tools for lower installed costs.
✓ **Convenient**	Wide variety of AC and DC operating coils for control circuit application flexibility.
✓ **Easy to Install**	35mm DIN rail mounting for all contactors and control relays for fast and easy installation and removal or panel mounting for more secure installation in high shock and vibration applications.
✓ **Simplified Installation**	Can be installed/mounted in multiple orientations, including upside down.
✓ **Modular Design**	Modular design allows Series 320 Overload Relays to be easily installed and allows use with the complete range of Series 330 Motor Protection Circuit Breakers and accessories.
✓ **Visible Certifications**	Our product certifications and electrical ratings are clearly marked on the outside of the devices for easy reference during installation.
✓ **Environmentally Friendly**	Environmentally friendly contacts are cadmium free and non-metallic materials are asbestos, halogen, and cadmium free. All c3controls products are compliant to the RoHS directives.
✓ **Added Safety**	IP20 guarded terminals with dual terminal markings prevent accidental contact with live parts.
✓ **36-Month Warranty***	Every product is backed by our 36-Month Warranty—giving you confidence in the quality, reliability, and performance of components designed for the most demanding applications.
✓ **Guaranteed Same-Day Shipping***	Product availability reduces inventory, and improves cash-flow—saving you money. With c3controls any order for standard catalog items received by 6:00pm ET is guaranteed to ship same-day.
✓ **Advantage Pricing**	Our approach to product development, manufacturing, and focus on servicing the OEM and Electrical Equipment Builder reduces cost. The result—the best value in the industry.

*See c3controls Terms & Conditions

> *"After ranking each manufacturer by voltage pick-up/drop-off and decibel level, we discovered that when it came to performance versus price, c3controls held an edge over other competitive products."*

Joseph Scott, Project Manager • **Smith Pump Company**

Miniature Non-Reversing Contactor

Miniature Reversing Contactor

Miniature Control Relay

UNIQUE PRODUCT LINE FEATURES

HIGH FAULT SCCR

High fault short circuit current rating of 100kA @ 480V and 600V with Class J fuses, provides safety and reliability in high fault applications.

COMPACT SIZE

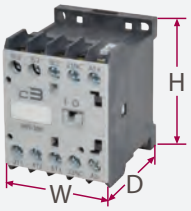

H: 58mm (2.28")
W: 45mm (1.77")
D: 52mm (2.05")

Leading the industry with our compact miniature 10HP contactors and control relays. One frame size (AC or DC) reduces panel area for lower installed costs – 28% reduction in panel area compared to standard devices.

INTEGRAL AUXILIARY

Integral auxiliary contacts, 1 NO or 1 NC, are standard on all c3controls miniature non-reversing contactors.

SEAMLESS COMPATIBILITY

Miniature Reversing Contactors are compatible with direct mounted Series 320-B1 Overload Relays and Series 330 Motor Protection Circuit Breakers.

COMMON ACCESSORIES

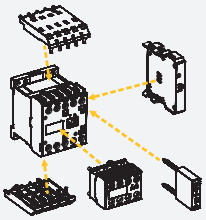

Designing starter assemblies and panels is easy! No more remembering which auxiliary works with each contactor. Our complete range of Series 300 Miniature Contactors and Control Relays share common accessories, reducing inventory and simplifying installation and assembly.

QUICK IDENTIFICATION

Enhanced markings, improved identification labels, and dual IEC and NEMA terminal markings ensure quick identification of product from all angles simplifying troubleshooting in panels with many devices.

FIND IT FAST

Miniature Contactors & Control Relays

- Certifications
- Specifications
- Dimension Drawings
- Installation Instructions
- Easy to Buy

www.c3controls.com

Motor Control Device Solutions

c3controls motor control devices are the perfect solution for manufacturers who want proper motor control and superior motor protection without having to overpay or compromise on quality. In fact, we engineer so much performance and flexibility into our products, we can deliver a remarkably better value than our competitors.

c3controls products deliver like no other.

Seamless Compatibility

Contactors, overload relays and motor protection circuit breakers are designed by c3controls to work together, with common connections and accessories, resulting in a high functioning compact starter.

LEADING THE INDUSTRY
with our compact miniature 10HP contactors and control relays. One frame size (AC or DC)—28% reduction in panel area.

Compact

The small size of c3controls motor control devices, plus features like common accessories, enable assembly into smaller control panels for lower installed costs.

Reliable Protection

Contactors provide the repeated on/off switching for the motor and are designed for motor, actuator, solenoid, and other power switching applications. Overload relays provide Trip Class 10 protection against overload and phase-loss conditions, and have ambient temperature compensation for motor protection in high temperature environments.

Ensures the protection of equipment and user.

Motor protection circuit breakers provide overload, phase-loss and short circuit protection, can be used by themselves as manual motor controllers or with contactors in group motor installations, and can achieve Type 2 coordination for optimum performance.

Type E self-protected combination manual motor controllers provide disconnecting means, branch circuit protection, motor control and motor overload protection all in a single device.

Proven

Our motor control devices are UL Listed and CE marked, meeting global standards requirements for use anywhere in the world.

NFPA 70 - National Electrical Code (NEC)

Understanding what functions are needed in your motor control circuit is critical when selecting motor control devices. Engineers benefit from the standards and codes established to ensure safety and protection to personnel and equipment.

More than just knowing the standards, c3controls, as a manufacturer of motor control products, has the application expertise you need to select the right products.

c3controls & Article 430 - Motors, Motor Circuits and Controllers

	To Supply	NEC Part	c3controls Product Series		
Motor disconnecting means		Part IX	330	630	Type E: 330 630
Motor branch-circuit, short circuit, and ground-fault protection		Part IV			Type E: 330 630
Motor circuit conductor		Part II			
Motor controller		Part VII	300/310 330	620 630	Type E: 330 630
Motor control circuits		Part VI			
Motor overload protection		Part III	320 330	620 630	Type E: 330 630
Motor		Part I			

Our motor control products align with Article 430 Part VII, Motor Controller, of the NFPA 70, the National Electrical Code.

IT'S EASY TO BUILD YOUR OWN MINIATURE CONTACTOR

Simply pick the code number from each of the sections below and combine them to build your part number.

Miniature Non-Reversing Contactors

I	II	III

Example: To build one of our most popular Miniature Contactors, the part number would be **I + II + III** or **300-M09N30D10**

I. MINIATURE NON-REVERSING CONTACTORS (3 NORMALLY OPEN POLES)

	MAX. Ie (A)		RATINGS FOR SWITCHING AC MOTORS - AC-3										
			kW (50Hz)				HP (60Hz)						
			3 PHASE				1 PHASE		3 PHASE				
CODE	AC-3	AC-1	230V	400/415V	500V	690V	115V	230V	200V	230V	460V	575V	LIST
300-M07N30	7	18	1.5	3	3	3	1/3	3/4	1-1/2	1-1/2	5	5	$ 37.00
300-M09N30	9	20	2.2	4	5.5	5.5	1/3	1	2	3	5	7-1/2	$ 44.00
300-M12N30	12	22	3	5.5	7.5	7.5	1/2	2	3	3	7-1/2	7-1/2	$ 58.00
300-M16N30	16	22	4	7.5	7.5	7.5	1	2	3	5	10	10	$ 77.00

II. COIL VOLTAGE

AC COIL VOLTAGE CODES

VOLTAGE	24	48	110 / 120	230	240	400	480	600
50Hz	—	—	D	—	—	—	—	—
60Hz	—	—	D	—	F	—	R	T
50/60Hz	XC	XJ	—	XN	—	XAM	—	—

DC COIL VOLTAGE CODES

VOLTAGE	12	24	125	250	LIST
	ZB	ZC	ZQ	ZP	$ 14.00

III. AUXILIARY CONTACT CONFIGURATION

CODE	DESCRIPTION	LIST
10	1 Normally Open (integral right side mounted)	$ 17.00
01	1 Normally Closed (integral right side mounted)	$ 17.00

DISCOUNT SCHEDULE F

Some of Our Popular Configurations:

MINIATURE NON-REVERSING CONTACTORS

CATALOG NUMBER	DESCRIPTION	LIST
300-M07N30D10	Miniature Non-Reversing, 7A, 3 Pole, 120V AC Coil, 1 NO Auxiliary Contact	$ 54.00
300-M09N30D10	Miniature Non-Reversing, 9A, 3 Pole, 120V AC Coil, 1 NO Auxiliary Contact	$ 61.00
300-M12N30D10	Miniature Non-Reversing, 12A, 3 Pole, 120V AC Coil, 1 NO Auxiliary Contact	$ 75.00
300-M16N30D10	Miniature Non-Reversing, 16A, 3 Pole, 120V AC Coil, 1 NO Auxiliary Contact	$ 94.00
300-M07N30ZC10	Miniature Non-Reversing, 7A, 3 Pole, 24V DC Coil, 1 NO Auxiliary Contact	$ 68.00
300-M09N30ZC10	Miniature Non-Reversing, 9A, 3 Pole, 24V DC Coil, 1 NO Auxiliary Contact	$ 75.00
300-M12N30ZC10	Miniature Non-Reversing, 12A, 3 Pole, 24V DC Coil, 1 NO Auxiliary Contact	$ 89.00
300-M16N30ZC10	Miniature Non-Reversing, 16A, 3 Pole, 24V DC Coil, 1 NO Auxiliary Contact	$108.00

IT'S EASY TO BUILD YOUR OWN MINIATURE CONTACTOR

Simply pick the code number from each of the sections below and combine them to build your part number.

Miniature Reversing Contactors

_____ _____ _____ – _____

I *II* *III* *IV*

Example: To build one of our most popular Contactors, the part number would be **I + II + III + IV** or **310-M09N30D42**

I. MINIATURE REVERSING CONTACTORS (3 NORMALLY OPEN POLES)

	MAX. Ie (A)		RATINGS FOR SWITCHING AC MOTORS - AC-3										
			kW (50Hz)				HP (60Hz)						
			3 PHASE				1 PHASE		3 PHASE				
CODE	AC-3	AC-1	230V	400/415V	500V	690V	115V	230V	200V	230V	460V	575V	LIST
310-M07N30	7	18	1.5	3	3	3	1/3	3/4	1-1/2	1-1/2	5	5	$184.00
310-M09N30	9	20	2.2	4	5.5	5.5	1/3	1	2	3	5	7-1/2	$198.00
310-M12N30	12	22	3	5.5	7.5	7.5	1/2	2	3	3	7-1/2	7-1/2	$226.00
310-M16N30	16	22	4	7.5	7.5	7.5	1	2	3	5	10	10	$264.00

II. COIL VOLTAGE

AC COIL VOLTAGE CODES

VOLTAGE	24	48	110 / 120	230	240	400	480	600
50Hz	—	—	D	—	—	—	—	—
60Hz	—	—	D	—	F	—	R	T
50/60Hz	XC	XJ	—	XN	—	XAM	—	—

DC COIL VOLTAGE CODES

VOLTAGE	12	24	125	250	LIST
	ZB	ZC	ZQ	ZP	$ 28.00

III. AUXILIARY CONTACT CONFIGURATION

CODE	DESCRIPTION	LIST
02	2 Normally Closed①	$ —
42	4 Normally Open② (2 NO on Forward Contactor and 2 NO on Reverse Contactor) and 2 Normally Closed② (1 NC on Forward Contactor and 1 NC on Reverse Contactor)	$ 30.00

① Integral right side mounted auxiliary contacts.
② Front mounted auxiliary contacts.

IV. OPTIONS

CODE	DESCRIPTION	LIST (deduct)
(Blank)	With Power Wires	—
WW	Without Interconnecting Power Wires	– $ 22.00

DISCOUNT SCHEDULE **F**

Some of Our Popular Configurations:

MINIATURE REVERSING CONTACTORS

CATALOG NUMBER	DESCRIPTION	LIST
310-M07N30D42	Miniature Reversing, 7A, 3 Pole, 120V AC Coil, 4 NO and 2 NC Auxiliary Contacts	$214.00
310-M09N30D42	Miniature Reversing, 9A, 3 Pole, 120V AC Coil, 4 NO and 2 NC Auxiliary Contacts	$228.00
310-M12N30D42	Miniature Reversing, 12A, 3 Pole, 120V AC Coil, 4 NO and 2 NC Auxiliary Contacts	$256.00
310-M16N30D42	Miniature Reversing, 16A, 3 Pole, 120V AC Coil, 4 NO and 2 NC Auxiliary Contacts	$294.00
310-M07N30ZC42	Miniature Reversing, 7A, 3 Pole, 24V DC Coil, 4 NO and 2 NC Auxiliary Contacts	$242.00
310-M09N30ZC42	Miniature Reversing, 9A, 3 Pole, 24V DC Coil, 4 NO and 2 NC Auxiliary Contacts	$256.00
310-M12N30ZC42	Miniature Reversing, 12A, 3 Pole, 24V DC Coil, 4 NO and 2 NC Auxiliary Contacts	$284.00
310-M16N30ZC42	Miniature Reversing, 16A, 3 Pole, 24V DC Coil, 4 NO and 2 NC Auxiliary Contacts	$322.00

Miniature Contactors and Control Relays

c3controls Series 300 Miniature Contactors and Control Relays are a compact family of control devices for switching motors and other logic control circuits. Our Series 310 Miniature Reversing Contactors are ideal for reversing motors in applications where panel space is at a premium and device modularity is required to satisfy virtually any application requirement. Common accessories enable the devices to be customized for each application. For motor overload protection, Series 320 Overload Relays can be directly mounted to miniature contactors. Just look and see what our Series 300 Miniature Non-Reversing Contactors and Control Relays and Series 310 Miniature Reversing Contactors have to offer.

Product features include:

- High fault short circuit rating of 100kA @ 480V and 600V with Class J Fuses, provides safety and reliability in high fault applications.
- Removable and replaceable identification marker, standard on all c3controls Miniature Non-Reversing Contactors and Control Relays, for labeling contactors and front mounted auxiliary contacts – simplifies trouble shooting in panels with many contactors.
- Series 330 Motor Protection Circuit Breakers direct mount onto Series 310 Reversing Contactors AC or DC delivering exceptional performance and functionality in a compact solution.
- Enhanced markings and high visibility labels for ease of troubleshooting and maintenance.
- Compact size – one (1) frame size for devices rated up to 16A, 10HP @ 460V (7.5kW @ 400V) reducing panel area requirements – smaller enclosures can be used for lower installed costs.
  - Miniature Non-Reversing Contactors and Control Relays: 45mm wide x 58mm high x 52mm deep (1-49/64" x 2-9/32" x 2-3/64")
  - Miniature Reversing Contactors: 90mm wide x 61mm high x 59mm deep (3-37/64" x 2-13/32" x 2-21/64")
- AC and DC operating coils for control circuit application flexibility – device is the same physical size with an AC or DC coil.
- Modular design and common snap-on accessories are easily installed without the use of tools, lowering assembly and installation costs.
- A wide variety of common accessories including:
  - 2 and 4 circuit front mounted auxiliary contacts with NO and NC configurations
  - Surge suppressors – RC, varistor, and diode
  - Electronic timers – On-Delay and Off-Delay with timing ranges up to 30 seconds
  - Reversing contactor accessories – mechanical interlock and interconnecting wiring modules
  - Printed circuit board link module
- Front mounted auxiliary contacts and surge suppressors install directly on top of the single front mounted mechanical interlock when used with our Miniature Reversing Contactors.
- Miniature Contactors compatible with direct mounted Series 320 Overload Relays with current ratings from 0.28 to 17A.
- IP20 guarded terminals with dual terminal markings prevent accidental contact with live parts.
- Device identification marker for labeling the contactor or control relay simplifies troubleshooting in panels with many devices.
- Universal ratings and markings: A, kW, and HP ratings as well as applicable 3rd party certification markings.
- 35mm DIN rail mounting for fast and easy installation and removal without the use of tools, panel mounting for more secure installation in high shock and vibration applications.
- Miniature Non-Reversing Contactors and Control Relays feature printed circuit board mounting with an accessory link module.
- Control relay includes bifurcated contacts, rated 16A AC-1, A600, and Q600 for high current switching applications up to 600V.
- Four pole control relays with NO and NC contact configurations.

UNIQUE PRODUCT FEATURES

The Printed Circuit Board Link Module installs directly on the terminals of standard miniature contactors and control relays enabling them to be direct mounted on an electronic printed circuit board. The module is rated 16A AC-3 and 22A AC-1 to take full advantage of the maximum switching capability of the miniature contactor and control relay.

The insulated, over-molded wiring modules provide error free interconnections for reversing the power poles, and provide the electrical interlock through the integrated normally closed auxiliary contacts.

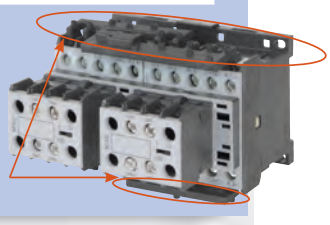

IT'S EASY TO BUILD YOUR OWN MINIATURE CONTROL RELAY

Simply pick the code number from each of the sections below and combine them to build your part number.

Miniature Control Relays

300-C16N _____ _____

I II III

Example: To build one of our most popular Miniature Control Relays, the part number would be **300-C16N + II + III** or **300-C16N22D**

I. MINIATURE CONTROL RELAYS

CODE	DESCRIPTION	CONTACT RATINGS	LIST
300-C16N	Four (4) Pole Control Relay	16A AC-1, A600, Q600	$43.00

II. CONTACT CONFIGURATION

CODE	DESCRIPTION
22	2 NO and 2 NC
31	3 NO and 1 NC
40	4 NO
13	1 NO and 3 NC
04	4 NC

II. COIL VOLTAGE

AC COIL VOLTAGE CODES

VOLTAGE	24	48	110 / 120	230	240	400	480	600
50Hz	—	—	D	—	—	—	—	—
60Hz	—	—	D	—	F	—	R	T
50/60Hz	XC	XJ	—	XN	—	XAM	—	—

DC COIL VOLTAGE CODES

VOLTAGE	12	24	125	250	LIST
	ZB	ZC	ZQ	ZP	$ 14.00

DISCOUNT SCHEDULE **F**

Some of Our Popular Configurations:

MINIATURE CONTROL RELAYS

CATALOG NUMBER	DESCRIPTION	LIST
300-C16N22D	Miniature Control Relay, 2 NO and 2 NC, 120V AC Coil	$43.00
300-C16N22ZC	Miniature Control Relay, 2 NO and 2 NC, 24V DC Coil	$57.00
300-C16N40D	Miniature Control Relay, 4 NO, 120V AC Coil	$43.00
300-C16N40ZC	Miniature Control Relay, 4 NO, 24V DC Coil	$57.00

Accessories for Miniature Contactors and Control Relays

The complete range of Series 300 Miniature Contactors and Control Relays share common accessories including auxiliary contacts, electronic timers, reversing contactor modules, surge supressors and a printed circuit board link module if you don't want to mount these devices on a panel or 35mm DIN rail. Designing starter assemblies and panels is easy – you don't have to remember which auxiliary is required for each contactor or control relay, they all work together. Installation is easy too – once you learn how to install each accessory, it's always the same no matter what contactor or control relay it's being installed on. If simple design and assembly are not enough – you'll also reduce your inventory and maximize its flexibility, because unique accessories are not required for each size contactor or control relay.

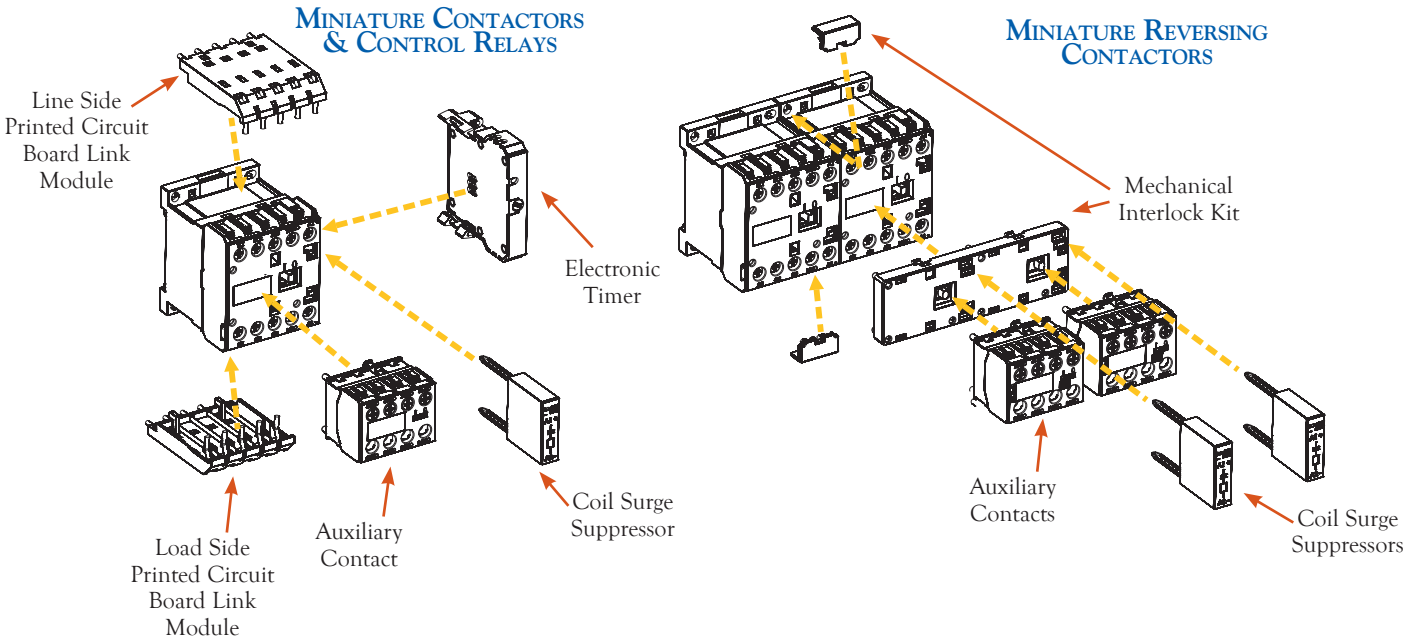

IT'S EASY TO BUILD YOUR OWN OPERATING COIL

Simply pick the code number from each of the sections below and combine them to build your part number.

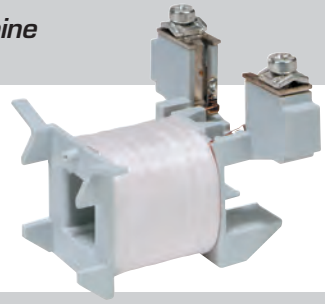

Operating Coils

_____ _____
I II

Example: To build one of our most popular Operating Coils, the part number would be **I + II** or **ACM16D**

I. OPERATING COIL TYPE

CODE	DESCRIPTION	CONTACT RATINGS	LIST
ACM16	AC Operating Coil	16A AC-1, A600, Q600	$17.00
DCM16	DC Operating Coil	16A AC-1, A600, Q600	$38.00

DISCOUNT SCHEDULE **F**

II. COIL VOLTAGE

AC COIL VOLTAGE CODES

VOLTAGE	24	48	110 / 120	230	240	400	480	600
50Hz	—	—	D	—	—	—	—	—
60Hz	—	—	D	—	F	—	R	T
50/60Hz	XC	XJ	—	XN	—	XAM	—	—

DC COIL VOLTAGE CODES

VOLTAGE	12	24	125	250
	ZB	ZC	ZQ	ZP

AUXILIARY CONTACTS

Our front mounted auxiliary contact modules feature IP20 guarded terminals to protect against accidental contact with live parts. The modules are available in 2 and 4 circuit configurations. The device identification marker simplifies trouble shooting in panels with many devices. These modules snap-on and install without the use of tools. NOTE: See chart below for maximum number of front mounted auxiliary contacts.

CONTACT CONFIGURATION

CODE	NO	NC	FOR USE WITH CONTACTORS	LIST
300-MFA20	2	0	M07, M09, M12, M16	$20.60
300-MFA11	1	1		$20.60
300-MFA02	0	2		$20.60
300-MFA40	4	0		$40.40
300-MFA22	2	2		$40.40
300-MFA04	0	4		$40.40
300-MFA31	3	1		$40.40
300-MFA13	1	3		$40.40

CODE	NO	NC	FOR USE WITH RELAYS	LIST
300-CFA20	2	0	C16	$20.60
300-CFA11	1	1		$20.60
300-CFA02	0	2		$20.60
300-CFA40	4	0		$40.40
300-CFA22	2	2		$40.40
300-CFA04	0	4		$40.40
300-CFA31	3	1		$40.40
300-CFA13	1	3		$40.40

MAXIMUM NUMBER OF FRONT MOUNTED AUXILIARY CONTACTS

COIL CODE	MAXIMUM NUMBER
D, F, R, T, XC, XJ, XN, XAM	4
ZB, ZC, ZD, ZQ, ZP	2

PRINTED CIRCUIT BOARD LINK MODULE

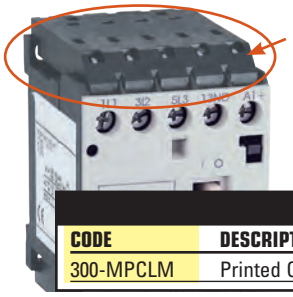

The printed circuit board module enables miniature contactors and control relays to be mounted directly on electronic printed circuit boards. The module is rated 16A AC-3 and 22A AC-1.

CODE	DESCRIPTION	LIST
300-MPCLM	Printed Circuit Board Link Module	$ 7.00

WIRING MODULE

Reversing contactor power wiring modules make field assembly of reversing contactors easy.

CODE	FOR USE WITH CONTACTORS	LIST
300-RWM16	M07, M09, M12, M16	$22.00

ELECTRONIC TIMERS

Right side mounted electronic timers are available in On-Delay and Off-Delay configurations with timing ranges up to 30 seconds. The modules install without the use of tools, and can be used in conjunction with all other accessories.

CODE	FUNCTION	TIMING RANGE (Secs.)	VOLTAGE	LIST
300-MTED3M	On-Delay	0.3 ~ 3	24 ~ 240V AC/DC	$80.00
300-MTED10M		1 ~ 10		$80.00
300-MTED30M		3 ~ 30		$80.00
300-MTDD3	Off-Delay	0.3 ~ 3	24 ~ 60V AC/DC	$80.00
300-MTDD10		1 ~ 10		$80.00
300-MTDD30		3 ~ 30		$80.00
300-MTDD3M	Off-Delay	0.3 ~ 3	100 ~ 240V AC/DC	$80.00
300-MTDD10M		1 ~ 10		$80.00
300-MTDD30M		3 ~ 30		$80.00

MECHANICAL INTERLOCK

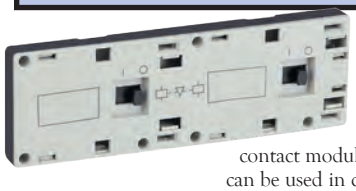

Our front mounted mechanical interlock is for reversing contactors. The interlock prevents the forward and reverse contactors from being actuated at the same time. Auxiliary contact modules, surge suppressors, and timers can be used in conjunction with the mechanical interlock.

CODE	DESCRIPTION	LIST
300-MMI	Front Mounted Mechanical Interlock	$22.00

SURGE SUPPRESSORS

Front mounted surge suppressors protect sensitive electronic components from damaging line voltage spikes. The modules install without the use of tools, and can be used in conjunction with all other accessories.

CODE	VOLTAGE RANGE	TYPE	LIST
300-MRCXC	12 ~ 24V 50/60Hz	RC	$19.00
300-MRCXJ	24 ~ 48V 50/60Hz		$19.00
300-MRCAH	50 ~ 127V 50/60Hz		$19.00
300-MRCXF	130 ~ 250V 50/60Hz		$19.00
300-MRCQ	275 ~ 380V 50/60Hz		$19.00
300-MRCT	400 ~ 510V 50/60Hz		$19.00
300-MVSXJ	12 ~ 48VAC / 12 ~ 60VDC	Varistor	$19.00
300-MVSAH	50 ~ 127VAC / 60 ~ 180VDC		$19.00
300-MVSP	130 ~ 250VAC / 180 ~ 300VDC		$19.00
300-MVSQ	277 ~ 380VAC / 300 ~ 510VDC		$19.00
300-MVST	400 ~ 510VAC		$19.00
300-MDST	12 ~ 600VDC	Diode	$19.00

DISCOUNT SCHEDULE F

Specifications:

ELECTRICAL SPECIFICATIONS					
		M07	M09	M12	M16
ELECTRICAL GENERAL					
	UNITS				
Rated Operating Frequency	Hz	25 ~ 400			
Rated Coil Frequencies		AC: 50Hz, 60Hz, 50/60Hz and DC			
ELECTRICAL UL/CSA APPLICATIONS					
Rated Operating Voltage, Ue	VAC	600			
General Purpose Current Rating	A	18	20	22	22
RATED 1 PHASE OPERATING CURRENT, Ie					
115V	A	7.2	7.2	9.8	16
230V	A	6.9	8	12	12
RATED 1 PHASE OPERATING POWER, PE					
115V	HP	1/3	1/3	1/2	1
230V	HP	3/4	1	2	2
RATED 3 PHASE OPERATING CURRENT, Ie					
200V	A	6.9	7.8	11	11
230V	A	6	6.8	9.6	9.6
460V	A	7.6	7.6	11	14
575V	A	6.1	9	9	11
RATED 3 PHASE OPERATING POWER, Pe					
200V	HP	1-1/2	2	3	3
230V	HP	1-1/2	3	3	5
460V	HP	5	5	7-1/2	10
575V	HP	5	7-1/2	7-1/2	10
Standard Short Circuit Current	kA	5	5	5	5
Maximum Fuse Size	A	30	30	30	40
High Fault Short Circuit Current	kA	100	100	100	100
Maximum Fuse Size (Class J)	A	15	15	15	20
ELECTRICAL IEC APPLICATIONS					
Rated Insulation Voltage, Ui	V	690			
Rated Operating Voltage, Ue	VAC	690			
Rated Thermal Current, Ith	A	18	20	22	22
RATED AC-1 OPERATING CURRENT, Ie					
At 55° C (131° F)	A	18	20	22	22
RATED AC-3 OPERATING CURRENT, Ie					
220 ~ 240V	A	6.8	9.6	—	—
380 ~ 400V	A	6.3	8.1	11	14.8
415 ~ 440V	A	7	9	12	16
500V	A	5	9	12	12
660 ~ 690V	A	3.5	6.7	9	9
RATED AC-3 OPERATING POWER, Pe					
220 ~ 240V	kW	1.5	2.2	3	4
380 ~ 400V	kW	3	4	5.5	7.5
415 ~ 440V	kW	3	4	5.5	7.5
500V	kW	3	5.5	7.5	7.5
660 ~ 690V	kW	3	5.5	7.5	7.5
RATED AC-4 OPERATING CURRENT, Ie					
220 ~ 240V	A	2.5	4	4	5
380 ~ 400V	A	2.5	4	4	5
415 ~ 440V	A	2.5	4	4	5
RATED AC-4 OPERATING RATINGS, kW (200,000 operations)					
220 ~ 240V	kW	1.1	1.5	2.2	3
380 ~ 400V	kW	2.2	3	4	5.5
415 ~ 440V	kW	2.2	3	4	5.5
500V	kW	3	3	4	5.5
660 ~ 690V	kW	3	4	4	5.5
RATED AC-4 OPERATING RATINGS, A (200,000 operations)					
220 ~ 240V	A	5.8	7.5	10	13.3
380 ~ 400V	A	5.8	7.5	10	13.3
415 ~ 440V	A	5.8	7.5	10	13.3
500V	A	5.4	6.3	7.3	10.8
660 ~ 690V	A	4.1	5	5.5	8.1

ELECTRICAL SPECIFICATIONS (CONTINUED)

		M07	M09	M12	M16
ELECTRICAL IEC APPLICATIONS (CONTINUED)					
	UNITS				
MAXIMUM ELECTRICAL SWITCHING RATE					
AC-1 & AC-4	Ops./Hr.	300			
AC-3	Ops./Hr.	600			
Electrical Endurance, AC-3 at Maximum Rated 3 Phase Operating Power (@400V)	Ops. (mil.)	1.4	1.3	1.2	1.1
Short Circuit Current Rating with (gG/gL) fuses					
Type 1	A	35	35	35	35
Type 2	A	20	20	25	25

COIL CHARACTERISTICS, MECHANICAL, ENVIRONMENTAL & CONSTRUCTION SPECIFICATIONS

COIL CHARACTERISTICS		
	UNITS	
Rated Insulation Voltage, Ui	V	690
OPERATING LIMITS		
50HZ, 60HZ, 50/60HZ		
Operating	xUc	0.8 ~ 1.1
Pick-Up	xUc	0.6 ~ 0.8
Drop-Out	xUc	0.4 ~ 0.6
DC		
Operating	xUc	0.8 ~ 1.1
Pick-Up	xUc	0.4 ~ 0.7
Drop-Out	xUc	0.3 ~ 0.5
COIL CONSUMPTION		
50HZ, 60HZ, 50/60HZ		
Pick-Up	VA	16
Hold-In	VA	2 ~ 3
DC		
Pick-Up	W	2 ~ 3
Hold-In	W	2 ~ 3
OPERATING TIMES		
AC		
Pick-Up	msec.	20 ~ 30
Drop-Out	msec.	20 ~ 30
DC		
Pick-Up	msec.	25 ~ 35
Drop-Out	msec.	25 ~ 35
POWER DISSIPATION		
50Hz, 60Hz, 50/60Hz	W	2 ~ 3
POWER FACTOR		
Closed	cosφ	0.27
Open	cosφ	0.8
MECHANICAL		
Mechanical Endurance	Ops. (mil.)	10
Maximum Mechanical Switching Rate	Ops./Hr.	2000
ENVIRONMENTAL		
Ambient Operating Temperature	°C / °F	-25 to +55 / -13 to +131
Ambient Storage Temperature	°C / °F	-55 to +80 / -67 to +176
Altitude	m / ft	3,000 / 9,792
CONSTRUCTION		
INGRESS PROTECTION		
Main Circuits	—	IP20
Control Circuit Terminations	—	IP20
Weight	kg. / lbs.	0.18 / 0.40
TERMINAL CAPACITY		
AWG Wire		2 x 20 ~ 14
Solid	mm^2	2 x 0.5 ~ 2
Stranded	mm^2	2 x 0.5 ~ 2
Tightening Torque	lb-in.	8.8 ~ 10.6
	Nm	1.0 ~ 1.2

For RoHS compliance documentation by product, refer to www.c3controls.com.

Specifications:

ELECTRICAL & COIL CHARACTERISTICS SPECIFICATIONS		
		C16
ELECTRICAL GENERAL		
	UNITS	
Rated Operating Frequency	Hz	25 ~ 400
Rated Coil Frequencies		AC: 50Hz, 60Hz, 50/60Hz and DC
RATED AC-1 OPERATING CURRENT, Ie		
At 55° C (131° F)	A	16
CONTACT RATINGS		
Rated Voltage, Ue		
IEC	V	690
UL/CSA	V	600
Pilot Duty Rating	AC	A600
	DC	Q600
Make/Break		
AC-15		
@240V AC	A	10
@415V AC	A	5
@500V AC	A	4
DC-13		
@24V DC	A	6
@60V DC	A	1.5
@110V DC	A	0.7
@220V DC	A	0.35
Electrical Life	Ops. (mil.)	1
COIL CHARACTERISTICS		
Rated Insulation Voltage, Ui	V	690
OPERATING LIMITS		
50HZ, 60HZ, 50/60HZ		
Operating	xUc	0.8 ~ 1.1
Pick-Up	xUc	0.6 ~ 0.8
Drop-Out	xUc	0.4 ~ 0.6
DC		
Operating	xUc	0.8 ~ 1.1
Pick-Up	xUc	0.4 ~ 0.7
Drop-Out	xUc	0.3 ~ 0.5
COIL CONSUMPTION		
50HZ, 60HZ, 50/60HZ		
Pick-Up	VA	16
Hold-In	VA	2 ~ 3
DC		
Pick-Up	W	2 ~ 3
Hold-In	W	2 ~ 3
OPERATING TIMES		
AC		
Pick-Up	msec.	20 ~ 30
Drop-Out	msec.	20 ~ 30
DC		
Pick-Up	msec.	25 ~ 35
Drop-Out	msec.	25 ~ 35
POWER DISSIPATION		
50Hz, 60Hz, 50/60Hz	W	2 ~ 3
POWER FACTOR		
Closed	cosφ	0.27
Open	cosφ	0.8

MECHANICAL, ENVIRONMENTAL & CONSTRUCTION RELAY SPECIFICATIONS

		C16
MECHANICAL		
	UNITS	
Mechanical Life	Ops. (mil.)	10
ENVIRONMENTAL		
Ambient Operating Temperature	°C / °F	-25 to +55 / -13 to +131
Ambient Storage Temperature	°C / °F	-55 to +80 / -67 to +176
Altitude	m / ft	3,000 / 9,792
CONSTRUCTION		
INGRESS PROTECTION		
Protection Class		IP20
Weight	kg./lb.	0.18/0.42
TERMINAL CAPACITY		
AWG Wire		2 x 20 ~ 14
Solid	mm^2	2 x 0.5 ~ 2
Stranded	mm^2	2 x 0.5 ~ 2
Tightening Torque	lb-in.	8.8 ~ 10.6
	Nm	1.0 ~ 1.2

For RoHS compliance documentation by product, refer to www.c3controls.com.

AUXILIARY CONTACTS SPECIFICATIONS

		300-MFA, 300-CFA
ELECTRICAL UL/CSA APPLICATIONS		
	UNITS	
Rated Operating Voltage, Ue	VAC	600
PILOT DUTY RATING		
AC		A600
DC		Q600
ELECTRICAL IEC APPLICATIONS		
Rated Insulation Voltage, Ui	V	690
Rated Operating Voltage, Ue	VAC	690
Rated Thermal Current, Ith	A	10
RATED AC-15 OPERATING CURRENT, Ie		
220V	A	10
380 ~ 400V	A	5
RATED DC-13 OPERATING CURRENT, Ie		
24V	A	1.5
CONSTRUCTION		
TERMINAL CAPACITY		
AWG Wire		2 x 20 ~ 14
Solid	mm^2	2 x 0.5 ~ 2
Stranded	mm^2	2 x 0.5 ~ 2
Tightening Torque	lb-in.	8.8 ~ 10.6
	Nm	1.0 ~ 1.2

For RoHS compliance documentation by product, refer to www.c3controls.com.

MOUNTING POSITIONS FOR MINIATURE CONTACTORS AND CONTROL RELAYS

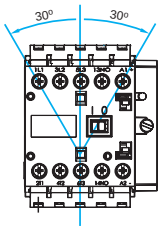

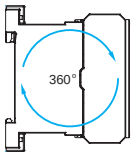

MINIATURE NON-REVERSING CONTACTOR & CONTROL RELAY WITH AUXILIARY CONTACTS & SURGE SUPPRESSOR

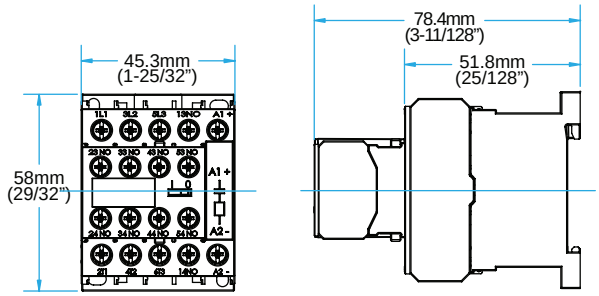

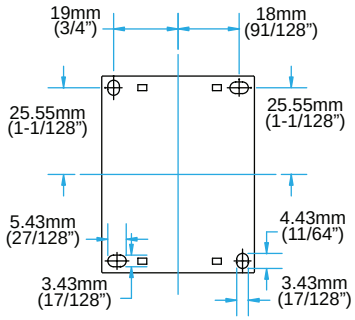

MINIATURE NON-REVERSING CONTACTOR & CONTROL RELAY WITH PRINTED CIRCUIT BOARD LINK MODULE AND ELECTRONIC TIMER

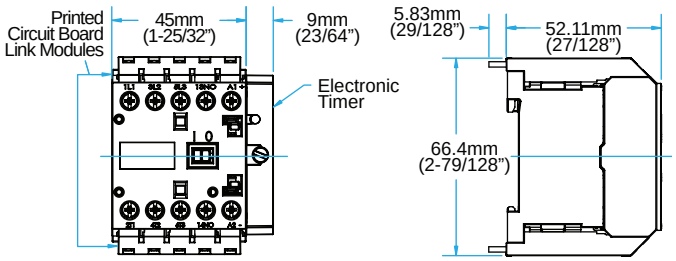

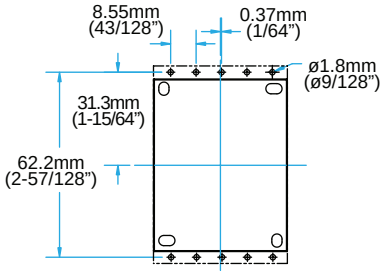

MINIATURE REVERSING CONTACTOR WITH AUXILIARY CONTACTS & SURGE SUPPRESSOR

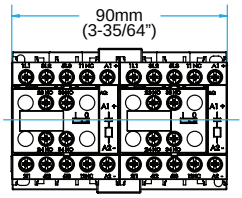

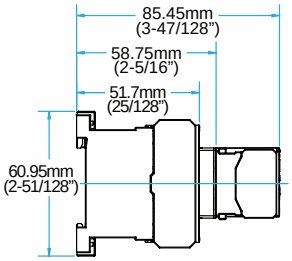

MINIATURE NON-REVERSING CONTACTOR WITH OVERLOAD RELAY ASSEMBLY

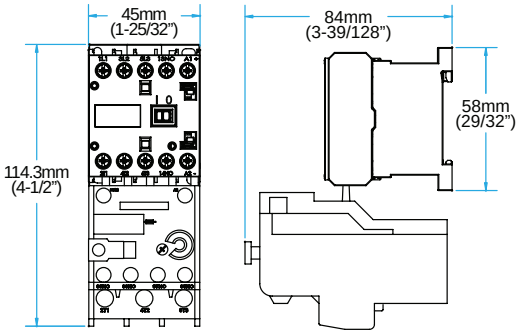

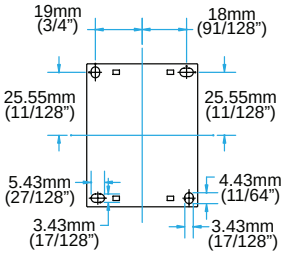

VISIT WWW.C3CONTROLS.COM TO DOWNLOAD CAD DRAWINGS

OVERLOAD RELAYS

series 320

Need reliable, accurate overload and phase-loss protection for your motors? c3controls' Series 320 Bimetallic Overload Relays provide unmatched protection and can be directly installed on all Series 300 Contactors, saving you time and panel space. Plus, cULus and CE markings make them applicable worldwide.

Section 6

Bimetallic Overload Relays	6
Specifications	8
Accessories	9
Trip Characteristics & Circuit Diagrams	10
Dimensions	11

PROVEN

Conformity to Standards:
UL 508, 60947-4-1
CSA C22.2 No. 14
IEC 60947-1, 60947-4-1

Certifications:
UL File #: E68568 (Guide NKCR, NKCR7)

CE Marked (per EU Low Voltage Directive 2006/95/EC and RoHS Directive 2011/65/EU)

Visit c3controls.com to download product certifications.

NOTE: The scope (range, description, price, specifications, dimensions, etc.) of the product featured in this section is subject to change without notice. Refer to c3controls.com for product updates.

OVERLOAD RELAYS

c3controls offers a comprehensive line of Motor Control products designed and manufactured to meet the needs of the machine builder. We promise durable products at a price that gives you an edge, and we guarantee same-day shipping. Check out all the features of our Series 320 Overload Relays below!

DELIVERING SUPERIOR PRODUCT QUALITY AND MANUFACTURING EXCELLENCE

✓ **Proven**	Our Series 320 Overload Relays are UL Listed and CE marked meeting global standards requirements.
✓ **Reliability**	Trip Class 10 for reliable and accurate protection against overload conditions. Trips within 10 seconds when carrying a current of 720%.
✓ **Trip Indication**	Visible trip indication to provide clear indication of what device tripped, simplifies troubleshooting in panels.
✓ **Visible Markings**	High visibility labels and markings; dual IEC and NEMA terminal markings for ease of wiring anywhere in the world.
✓ **Modular Design**	Modular design allows Series 320 Overload Relays to be direct mounted onto Series 300 Contactors.
✓ **Visible Certifications**	Our product certifications and electrical ratings are clearly marked on the outside of the devices for easy reference during installation.
✓ **Added Safety**	IP20 guarded terminals with dual terminal markings prevent accidental contact with live parts.
✓ **36-Month Warranty***	Every product is backed by our 36-Month Warranty—giving you confidence in the quality, reliability, and performance of components designed for the most demanding applications.
✓ **Guaranteed Same-Day Shipping***	Product availability reduces inventory, and improves cash-flow—saving you money. With c3controls any order for standard catalog items received by 6:00pm ET is guaranteed to ship same-day.
✓ **Advantage Pricing**	Our approach to product development, manufacturing, and focus on servicing the OEM and Electrical Equipment Builder reduces cost. The result—the best value in the industry.

*See c3controls Terms & Conditions

"When I evaluate components for our machines I consider three things: quality, price, and lead-time. All are equally important, and most manufacturers can only deliver on any two out of the three. c3controls delivers all three without fail. We get quality products at a price that's remained competitive since we first began doing business with them back in 2006, and what we buy is always in stock."

Annie Carbajal, Purchasing Manager • **Aqueous Technologies**

320-B1

320-B2

320-B3

320-B4

320-B5

UNIQUE PRODUCT LINE FEATURES

HIGH FAULT SCCR

High fault short circuit current rating of 100kA @ 480V and 600V with Class J fuses, provides safety and reliability in high fault applications.

ADJUSTABLE CURRENT SETTING

Full load current adjustment ratio of approximately 1:1.5 enables overload relay to be set to exact FLA of motor.

PHASE LOSS SENSITIVITY

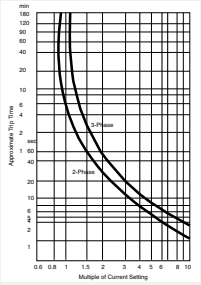

Single phase sensitivity to protect motors against damaging phase loss conditions.

SELECTABLE RESET MODE

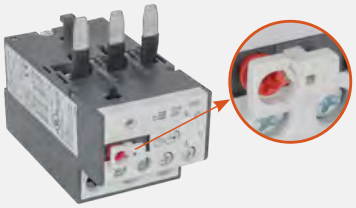

Manual or automatic reset and test modes, and stop button all in a single device for convenient control circuit wiring.

SEAMLESS COMPATIBILITY

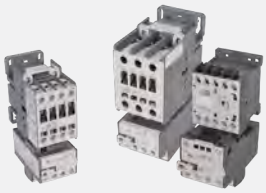

Series 320-B2 Overload Relays direct mount onto all Series 300 Non-Reversing and Series 310, 9A to 25A AC/DC, Reversing Contactors and Series 320-B1 Overload Relays direct mount onto all Series 300/310 Miniature Non-Reversing and Reversing Contactors.

TRIP TEST FUNCTION

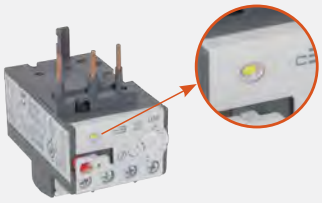

Trip test function standard on all c3controls Series 320-B2 to 320-B5, allows for easier installation, testing, and troubleshooting.

FIND IT FAST

Overload Relays

- Certifications
- Specifications
- Dimension Drawings
- Installation Instructions
- Easy to Buy

c3controls.com

Motor Control Device Solutions

c3controls motor control devices are the perfect solution for manufacturers who want proper motor control and superior motor protection without having to overpay or compromise on quality. In fact, we engineer so much performance and flexibility into our products, we can deliver a remarkably better value than our competitors.

c3controls products deliver like no other.

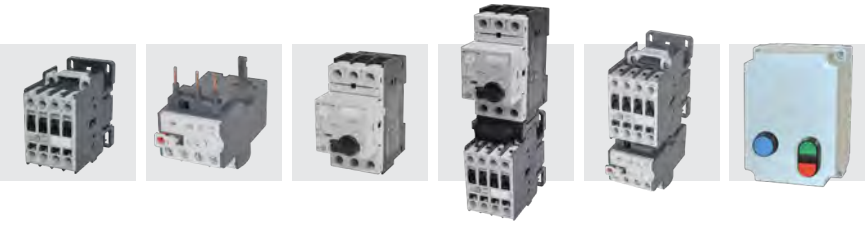

Seamless Compatibility

Contactors, overload relays and motor protection circuit breakers are designed by c3controls to work together, with common connections and accessories, resulting in a high functioning compact starter.

LEADING THE INDUSTRY
with our compact miniature 10HP contactors and control relays. One frame size (AC or DC)—28% reduction in panel area.

Compact

The small size of c3controls motor control devices, plus features like common accessories, enable assembly into smaller control panels for lower installed costs.

Reliable Protection

Contactors provide the repeated on/off switching for the motor and are designed for motor, actuator, solenoid, and other power switching applications. Overload relays provide Trip Class 10 protection against overload and phase-loss conditions, and have ambient temperature compensation for motor protection in high temperature environments.

Ensures the protection of equipment and user.

Motor protection circuit breakers provide overload, phase-loss and short circuit protection, can be used by themselves as manual motor controllers or with contactors in group motor installations, and can achieve Type 2 coordination for optimum performance.

Type E self-protected combination manual motor controllers provide disconnecting means, branch circuit protection, motor control and motor overload protection all in a single device.

Proven

Our motor control devices are UL Listed and CE marked, meeting global standards requirements for use anywhere in the world.

NFPA 70 - National Electrical Code (NEC)

Understanding what functions are needed in your motor control circuit is critical when selecting motor control devices. Engineers benefit from the standards and codes established to ensure safety and protection to personnel and equipment.

More than just knowing the standards, c3controls, as a manufacturer of motor control products, has the application expertise you need to select the right products.

c3controls & Article 430 - Motors, Motor Circuits and Controllers

	To Supply	NEC Part	c3controls Product Series		
Motor disconnecting means		Part IX	330	630	Type E: 330 630
Motor branch-circuit, short circuit, and ground-fault protection		Part IV			Type E: 330 630
Motor circuit conductor		Part II			
Motor controller		Part VII	300/310 330	620 630	Type E: 330 630
Motor control circuits		Part VI			
Motor overload protection		Part III	320 330	620 630	Type E: 330 630
Motor		Part I			

Our motor control products align with Article 430 Part VII, Motor Controller, of the NFPA 70, the National Electrical Code.

IT'S EASY TO BUILD YOUR OWN OVERLOAD RELAY

Simply pick the code number from each of the sections below and combine them to build your part number.

Bimetallic Overload Relays

320-B _____
/ II

Example: To build one of our most popular Overload Relays, the part number would be **320-B + II** or **320-B2U32**

I. OVERLOAD RELAY TYPE

CODE	DESCRIPTION
320-B	Bimetallic Overload Relay

Our Series 320 Bimetallic Overload Relays are available in five frame sizes for motor full load currents from 0.28 ~ 112A.

DISCOUNT SCHEDULE **F**

II. OVERLOAD RELAY FRAME SIZE AND CURRENT ADJUSTMENT RANGE

CODE	INSTALLS ON CONTACTOR	CURRENT ADJUSTMENT RANGE	LIST
1C40	-M07, -M09, -M12, -M16	0.28 ~ 0.40	$ 57.00
1C63	-M07, -M09, -M12, -M16	0.40 ~ 0.63	$ 57.00
1C80	-M07, -M09, -M12, -M16	0.56 ~ 0.80	$ 57.00
1D12	-M07, -M09, -M12, -M16	0.8 ~ 1.2	$ 57.00
1D18	-M07, -M09, -M12, -M16	1.2 ~ 1.8	$ 57.00
1D28	-M07, -M09, -M12, -M16	1.8 ~ 2.8	$ 57.00
1D40	-M07, -M09, -M12, -M16	2.8 ~ 4.0	$ 57.00
1D63	-M07, -M09, -M12, -M16	4.0 ~ 6.3	$ 57.00
1D80	-M07, -M09, -M12, -M16	5.6 ~ 8.0	$ 57.00
1U10	-M07, -M09, -M12, -M16	7.0 ~ 10.0	$ 57.00
1U12	-M07, -M09, -M12, -M16	8.0 ~ 12.5	$ 57.00
1U15	-M07, -M09, -M12, -M16	10 ~ 15	$ 57.00
1U17	-M07, -M09, -M12, -M16	11 ~ 17	$ 57.00
2C40	-S09, -S12, -S18, -S25, -S32, -S40	0.28 ~ 0.40	$ 62.00
2C63	-S09, -S12, -S18, -S25, -S32, -S40	0.40 ~ 0.63	$ 62.00
2C80	-S09, -S12, -S18, -S25, -S32, -S40	0.56 ~ 0.80	$ 62.00
2D12	-S09, -S12, -S18, -S25, -S32, -S40	0.80 ~ 1.2	$ 62.00
2D18	-S09, -S12, -S18, -S25, -S32, -S40	1.2 ~ 1.8	$ 62.00
2D28	-S09, -S12, -S18, -S25, -S32, -S40	1.8 ~ 2.8	$ 62.00
2D40	-S09, -S12, -S18, -S25, -S32, -S40	2.8 ~ 4.0	$ 62.00
2D63	-S09, -S12, -S18, -S25, -S32, -S40	4.0 ~ 6.3	$ 62.00
2D80	-S09, -S12, -S18, -S25, -S32, -S40	5.6 ~ 8.0	$ 62.00
2U10	-S09, -S12, -S18, -S25, -S32, -S40	7.0 ~ 10.0	$ 62.00
2U12	-S09, -S12, -S18, -S25, -S32, -S40	8.0 ~ 12.5	$ 62.00
2U15	-S09, -S12, -S18, -S25, -S32, -S40	10 ~ 15	$ 62.00
2U17	-S09, -S12, -S18, -S25, -S32, -S40	11 ~ 17	$ 62.00
2U23	-S09, -S12, -S18, -S25, -S32, -S40	15 ~ 23	$ 62.00
2U32	-S09, -S12, -S18, -S25, -S32, -S40	22 ~ 32	$ 62.00
3U40	-S32, -S40	25 ~ 40	$ 94.00
4U50	-S50, -S65, -S80	32 ~ 50	$107.00
4U57	-S50, -S65, -S80	40 ~ 57	$107.00
4U63	-S50, -S65, -S80	50 ~ 63	$107.00
4U70	-S50, -S65, -S80	57 ~ 70	$107.00
5U80	-S95, -S105	63 ~ 80	$125.00
5U97	-S95, -S105	78 ~ 97	$125.00
5X11	-S95, -S105	90 ~ 112	$125.00

Some of Our Popular Configurations:

BIMETALLIC OVERLOAD RELAYS

CATALOG NUMBER	DESCRIPTION	LIST
320-B1D80	5.6 ~ 8.0A Overload Relay for Installation on 300-M07 Contactor	$ 57.00
320-B2U10	7 ~ 10A Overload Relay for Installation on 300-S09 Contactor	$ 62.00
320-B2U23	15 ~ 23A Overload Relay for Installation on 300-S25 Contactor	$ 62.00
320-B3U40	25 ~ 40A Overload Relay for Installation on 300-S40 Contactor	$ 94.00
320-B4U50	32 ~ 50A Overload Relay for Installation on 300-S50 Contactor	$107.00
320-B5U97	78 ~ 97A Overload Relay for Installation on 300-S95 Contactor	$125.00

MOMENTARY RESET PUSH BUTTONS

actuate the reset function of a Series 320 Overload Relay from outside the enclosure. *See Section 15 Page 25.*

Available Frame Sizes for Overload Relays

Bimetallic Overload Relays

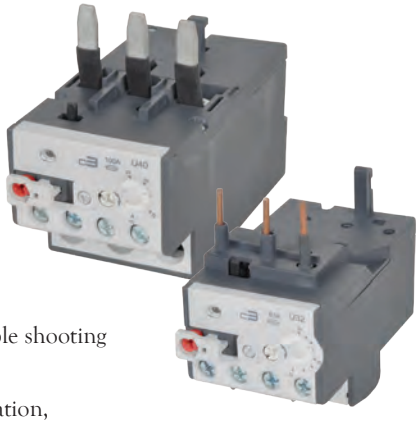

c3controls Series 320 Bimetallic Overload Relays provide a thermal Trip Class 10 overload protection for single and three phase motors, and phase loss protection for three phase motors. Other features like IP20 guarded terminals with dual terminal markings, integral stop button, and direct mounting will help you reduce your total installed costs and enhance the features and performance of your equipment. Just look and see what our Series 320 Overload Relays have to offer.

Product features include:

- High fault short circuit rating of 100kA @ 480V and 600V with Class J Fuses, provides safety and reliability in high fault applications.
- Visible trip indication provides clear indication of what device has tripped and simplifies trouble shooting in panels with many contactors.
- Trip test function standard on Series 320-B2 to 320-B5 overload relays, allows for easier installation, testing, and troubleshooting.
- Series 320-B1 and 320-B2 Overload Relays direct mount onto Series 310 Miniature Reversing Contactors and Series 310, 9A to 25A, Reversing Contactors. The result is seamless compatibility and a high performing multi-function solution.
- Enhanced markings and high visibility labels for ease of troubleshooting and maintenance.
- Series 320-B1 Overload Relays for use with Series 300 Miniature Contactors.
- Series 320-B1 Overload Relays include integral connection to auxiliary and coil terminations for ease of wiring during installation when installed on Series 300 Miniature Contactors.
- Series 320-B1 Overload Relays share the same great features and benefits of the larger frame sizes.
- Trip Class 10 for reliable and accurate protection against overload conditions.
- Single-phase sensitivity to protect motors against damaging phase loss conditions.
- Direct mounting to all contactors, Miniature and Standard.
- Dual IEC and NEMA terminal markings for ease of wiring anywhere in the world.
- IP20 guarded terminals prevent accidental contact with live parts.
- Combination head terminal screws allow the use of straight, phillips or posidrive screwdrivers. Allen head screws on 320-B4 and 320-B5 overload relays make it easy to apply the proper terminal tightening torque for secure conductor connections.
- Stop button for convenient and economical control circuit wiring.
- Ambient temperature compensation ensures reliable motor protection even in high temperature environments.
- Electrically isolated and integral 1 Normally Open and 1 Normally Closed auxiliary contacts.
- Selectable reset mode (manual or automatic).

UNIQUE PRODUCT FEATURES

A – Automatic Reset Only
AUTO – Automatic Reset and Test
H – Manual Reset Only
HAND – Manual Reset and Test

c3controls Series 320 Bimetallic Overload Relays feature a multi-function reset button enabling the user to select the reset mode – manual or automatic and whether or not to enable the test function. *All of this is achieved with just one unit, reducing your inventory!*

When the reset button is pressed, with the test function enabled, the Normally Open (NO) contact closes and the Normally Closed (NC) contact opens to verify the control circuit functionality. In addition, the NC contact can be used in a "Stop" circuit. With the test function disabled, the NO and NC contacts do not change state when the reset button is pressed – preventing unauthorized personnel from operating the control circuit.

Multiple functions in a single device help you to reduce inventory and customize the overload relay operation to provide the performance and features you need for your specific application.

Specifications:

ELECTRICAL AND ENVIRONMENTAL SPECIFICATIONS						
		320-B1	320-B2	320-B3	320-B4	320-B5
ELECTRICAL GENERAL						
	UNITS					
Current Setting Range	A	0.28 ~ 17	0.28 ~ 32	25 ~ 50	40 ~ 80	63 ~ 112
Operating Frequency	Hz	0 ~ 400				
Power Dissipation per Pole	W	0.9 ~ 1.4	1.3 ~ 2.0	1.3 ~ 2.0	1.9 ~ 4.8	3.0 ~ 4.8
ELECTRICAL UL/CSA APPLICATIONS						
MAIN CIRCUITS						
Rated Operating Voltage, Ue	VAC	600				
Standard Short Circuit Current	kA	5	5	5	10	10
Standard Short Circuit Maximum Fuse Size*	A	60	90	125	200	250
High Fault Short Circuit Current	kA	100	100	100	100	100
High Fault Maximum Fuse Size (Class J)*	A	30	60	60	100	150
CONTROL CIRCUITS						
Pilot Duty Rating	AC	C600				
	DC	R300				
ELECTRICAL IEC APPLICATIONS						
MAIN CIRCUITS						
Rated Insulation Voltage, Ui	V	690				
Rated Impulse Voltage, Uimp	kV	6				
Rated Operating Voltage, Ue	VAC	690				
Maximum Rated Operating Current, Ie	A	17	32	50	80	112
Maximum Fuse Size*	A	40	63	100	125	250
CONTROL CIRCUITS						
Rated Insulation Voltage, Ui	V	690				
Rated Operating Current, Ie						
AC-15						
@ 24V AC	A	4				
@ 48V AC	A	3.5				
@ 60V AC	A	3.5				
@ 120V AC	A	3				
@ 230V AC	A	2				
@ 400V AC	A	1.5				
@ 500V AC	A	0.5				
@ 690V AC	A	0.3				
DC-13						
@ 24V DC	A	1				
@ 48V DC	A	0.5				
@ 60V DC	A	0.5				
@ 110V DC	A	0.25				
@ 220V DC	A	0.1				
@ 250V DC	A	0.1				
Maximum Fuse Size (gL/gG)	A	6				
ENVIRONMENTAL						
Ambient Operating Temperature	°C / °F	-25 to +60 / -13 to +140				
Ambient Storage Temperature	°C / °F	-40 to +70 / -40 to +158				
Altitude	m/ft.	2,000 / 6,562				

*Varies by current adjustment range of overload relay.

CONSTRUCTION SPECIFICATIONS

		320-B1	320-B2	320-B3	320-B4	320-B5
CONSTRUCTION						
	UNITS					
Number of Poles	ul	3				
Trip Class	ul	10				
Pollution Degree	ul	3				
INGRESS PROTECTION						
Main Circuit Terminals	ul	IP20 (with wires connected)				
Control Circuit Terminals	ul	IP20				
WEIGHT	kg	0.15	0.15	0.31	0.31	0.37
	lbs.	0.33	0.33	0.68	0.68	0.82
CONDUCTOR SIZE						
MAIN CIRCUITS						
UL/CSA	AWG	14 ~ 6	14 ~ 6	18 ~ 2	18 ~ 2	8 ~ 1/0
Solid	mm^2	2 ~ 14	2 ~ 14	0.8 ~ 34	0.8 ~ 34	8 ~ 54
Stranded	mm^2	2 ~ 14	2 ~ 14	0.8 ~ 34	0.8 ~ 34	8 ~ 54
Fine Stranded	mm^2	2 ~ 14	2 ~ 14	0.8 ~ 34	0.8 ~ 34	8 ~ 54
Terminal Torque	Nm	1.4 ~ 2.3	1.4 ~ 2.3	4 ~ 6	4 ~ 6	5 ~ 6.5
	Lb-in.	12 ~ 20	12 ~ 20	35 ~ 55	35 ~ 53	44 ~ 57
CONTROL CIRCUITS						
UL/CSA	AWG	2 x 18 ~ 12				
Solid	mm^2	2 x 0.8 ~ 4				
Stranded	mm^2	2 x 0.8 ~ 4				
Fine Stranded	mm^2	2 x 0.8 ~ 4				
Terminal Torque	Nm	1.4 ~ 2.3				
	Lb-in.	12 ~ 20				
ROHS COMPLIANCE		For RoHS compliance documentation by product, refer to c3controls.com.				

SEPARATE MOUNTING ADAPTERS

320-BSMA2

320-BSMA4

Separate mounting adapters enable Series 320 Overload Relays to be installed separately from a contactor on a 35mm DIN rail or with fixing screws to a panel.

DISCOUNT SCHEDULE F

CODE	FOR USE WITH	LIST
320-BSMA2	320-B2*** Overload Relays	$23.00
320-BSMA4	320-B3*** and 320-B4*** Overload Relays	$28.00
320-BSMA5	320-B5*** Overload Relays	$35.00

NOTE: *** Represents the overload relay current adjustment range code. Refer to page 6.

MOUNTING POSITIONS

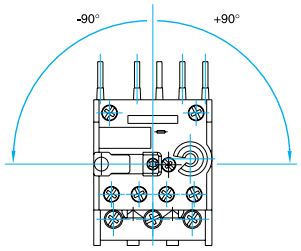

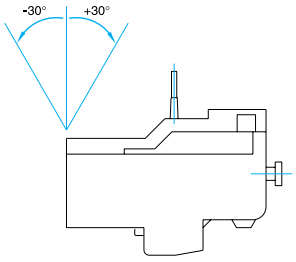

TRIP CHARACTERISTICS

320-B1***, 320-B2***, 320-B3*** & 320-B4***

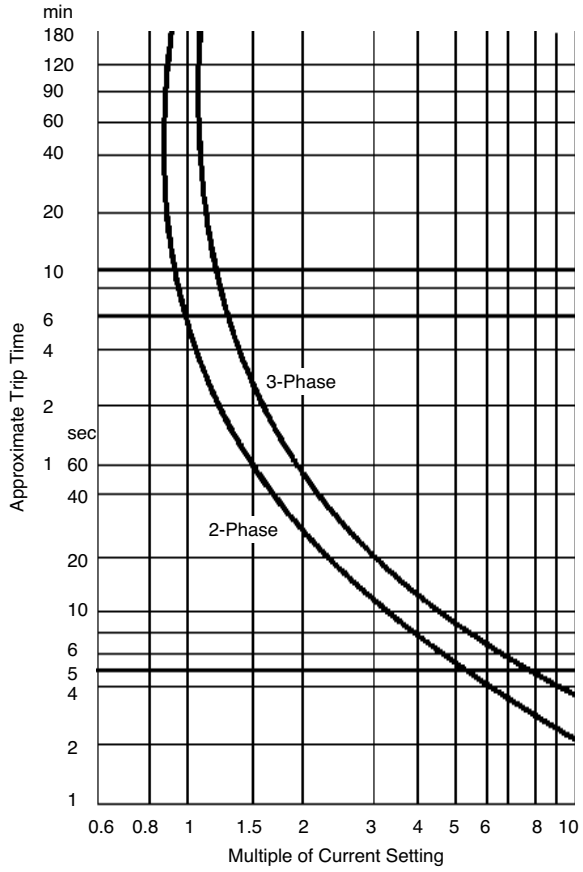

320-B5***

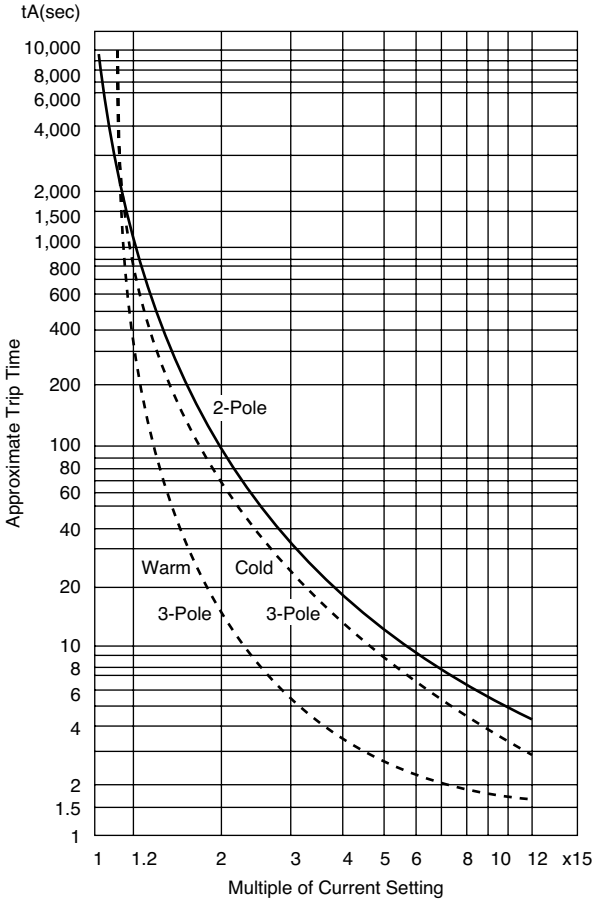

NOTE: ***Represents the overload relay current adjustment range code. Refer to page 6.

CIRCUIT DIAGRAMS

1-Phase

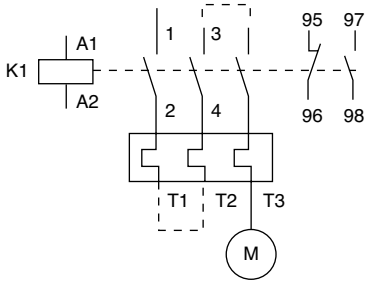

2-Phase

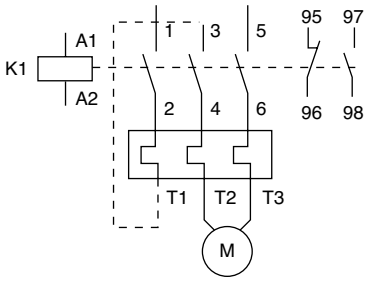

3-Phase

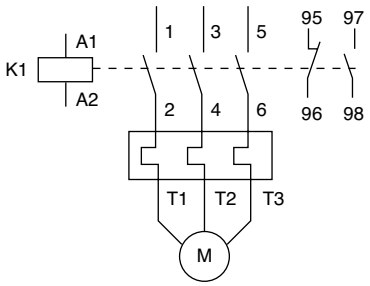

SERIES 320 BIMETALLIC OVERLOAD RELAYS

320-B1***

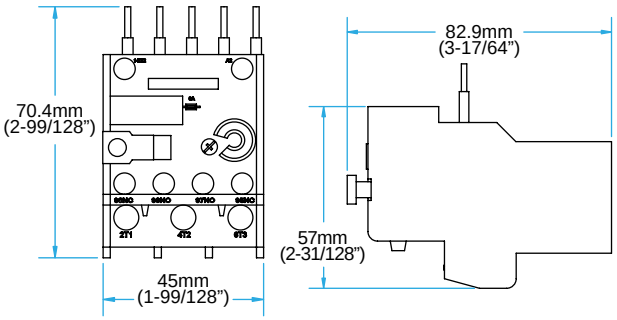

320-B2***

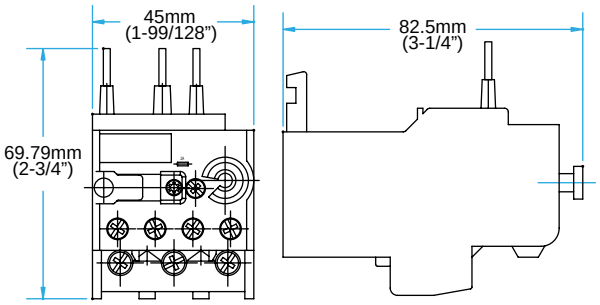

320-B3***

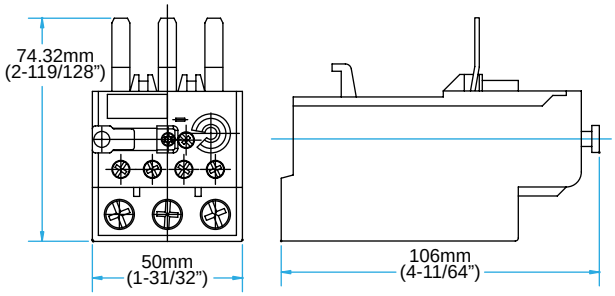

320-B4***

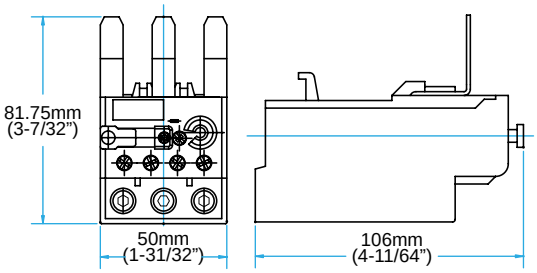

320-B5***

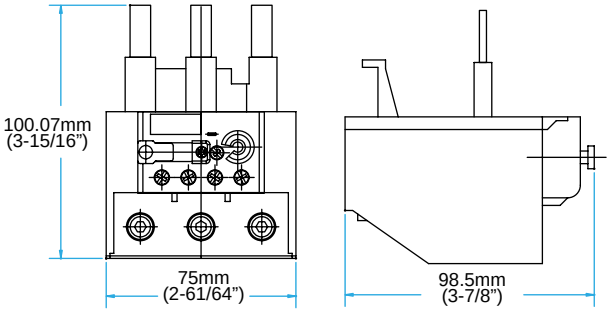

NOTE: ***Represents the overload relay current adjustment range code. Refer to page 6.

VISIT C3CONTROLS.COM TO DOWNLOAD CAD DRAWINGS

SERIES 320 SEPARATE MOUNTING ADAPTERS

320-BSMA2 Separate Mounting Adapter for use with 320-B2***

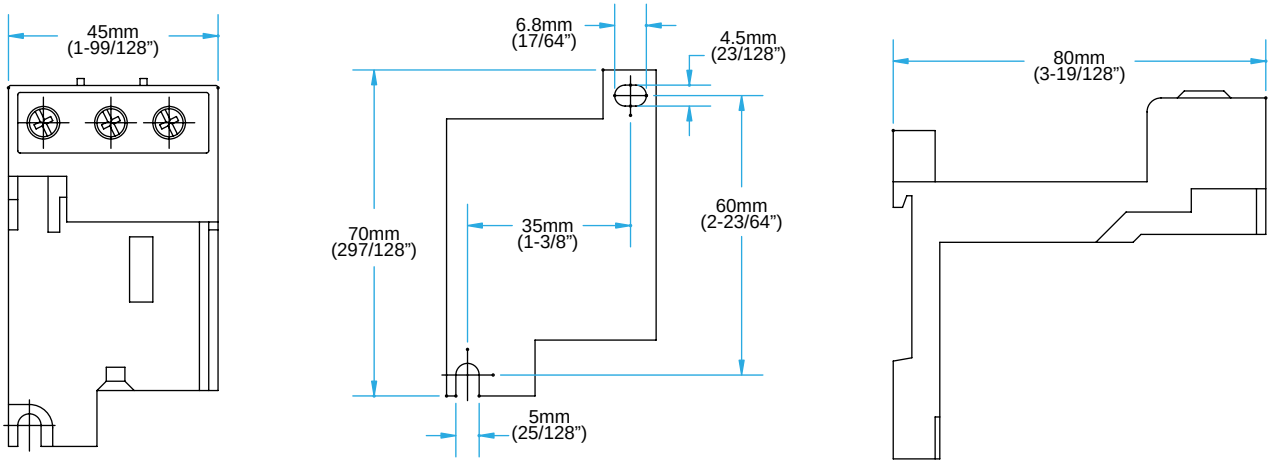

320-BSMA4 Separate Mounting Adapter for use with 320-B3*** or 320-B4***

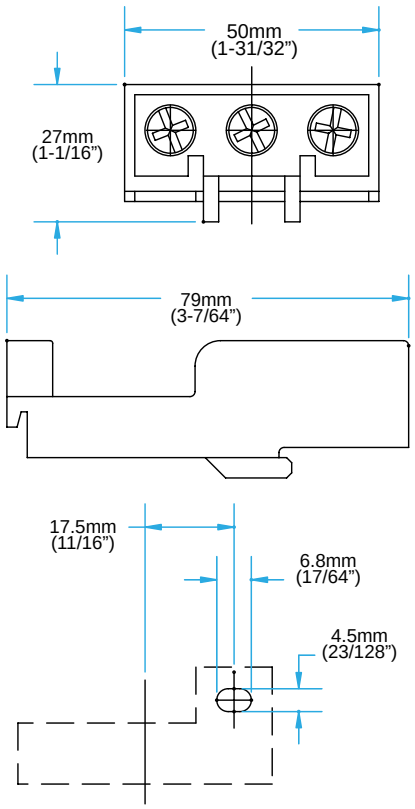

320-BSMA5 Separate Mounting Adapter for use with 320-B***

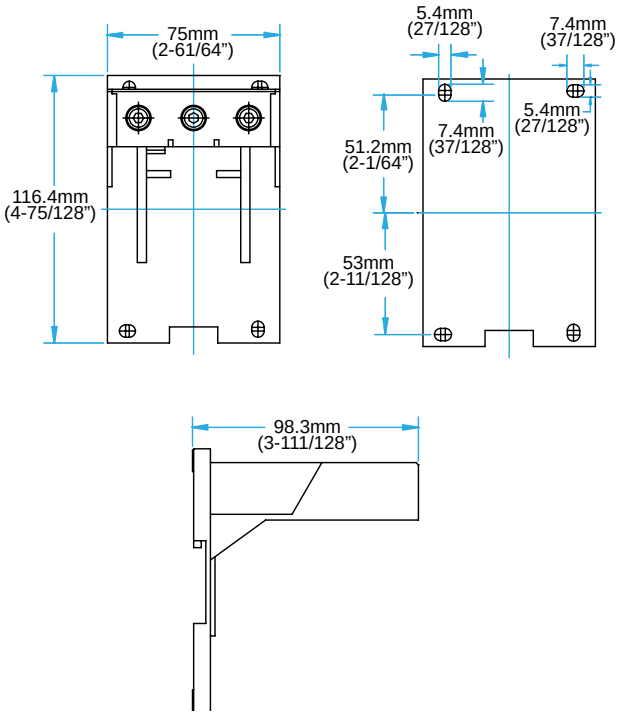

NOTE: ***Represents the overload relay current adjustment range code. Refer to page 6.

CONTACTOR & OVERLOAD RELAY ASSEMBLIES

series 620

c3controls' Series 620 assembled starters are compact in size, are easy to install, and provide reliable and accurate protection against overload and phase loss conditions. Power and control circuit terminals are readily accessible for easy wiring, while shared accessories enable starters to be customized for virtually any application. c3controls' starters will help reduce your costs and enhance the features and performance of your equipment.

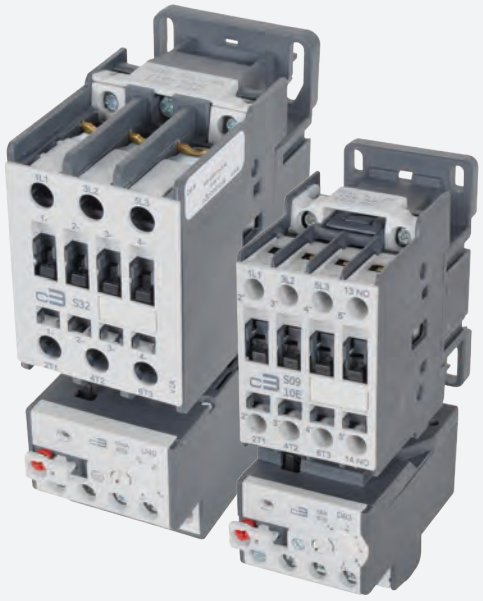

Section 7

Direct-On-Line Starters Contactor + Overload Relay	6
Accessories, Replacement Components & Circuit Diagrams	9
Specifications	10
Dimensions	11

PROVEN

Conformity to Standards:

CONTACTORS

UL 508, 60947-4-1

CSA C22.2 No. 14

IEC 60947-1, 60947-4-1

OVERLOAD RELAYS

UL 508, 60947-4-1

CSA C22.2 No. 14

IEC 60947-1, 60947-4-1

Certifications:

UL File #: E236197 (Guide NLDX, NLDX7), E68568 (Guide NKCR, NKCR7)

CE Marked (per EU Low Voltage Directive 2006/95/EC and RoHS Directive 2011/65/EU)

UL File #: E68568 (Guide NKCR, NKCR7)

CE Marked (per EU Low Voltage Directive 2006/95/EC and RoHS Directive 2011/65/EU)

Visit www.c3controls.com to download product certifications.

NOTE: The scope (range, description, price, specifications, dimensions, etc.) of the product featured in this section is subject to change without notice. Refer to www.c3controls.com for product updates.

CONTACTOR & OVERLOAD RELAY ASSEMBLIES

c3controls offers a comprehensive line of Motor Control products designed and manufactured to meet the needs of the machine builder. We promise durable products at a price that gives you an edge, and we guarantee same-day shipping. Check out all the features of our Series 620 Contactor and Overload Relay Assemblies below!

DELIVERING SUPERIOR PRODUCT QUALITY AND MANUFACTURING EXCELLENCE	
✓ **Proven**	Our Series 620 DOL Starters are UL Listed and CE marked meeting global standards requirements.
✓ **Compact Size**	Four (4) frame sizes for devices rated from 9A to 105A. Starter rated 15HP @ 460V (11kW @ 400V) are only 45mm (1-49/64") wide reducing panel area requirements – smaller enclosures can be used for lower installed costs.
✓ **Lower Cost**	Snap-on front mounted and side mounted auxiliary contacts install without the use of tools for lower installed costs.
✓ **Visible Markings**	High-visibility labels and markings. Dual IEC and NEMA terminal markings for easy wiring anywhere in the world.
✓ **Easy to Install**	35mm DIN rail mounting for all contactors from 9A to 105A for fast and easy installation and removal, or panel mounting for more secure installation in high shock and vibration applications.
✓ **Visible Certifications**	Our product certifications and electrical ratings are clearly marked on the outside of the devices for easy reference during installation.
✓ **Added Safety**	IP20 guarded terminals with dual terminal markings prevent accidental contact with live parts.
✓ **Limited Lifetime Warranty***	Every product is backed by our limited lifetime warranty—unmatched in the industry—bringing you quality components that perform in the most demanding applications.
✓ **Guaranteed Same-Day Shipping***	Product availability reduces inventory, and improves cash-flow—saving you money. With c3controls any order for standard catalog items received by 6:00pm ET is guaranteed to ship same-day.
✓ **Advantage Pricing**	Our approach to product development, manufacturing, and focus on servicing the OEM and Electrical Equipment Builder reduces cost. The result—the best value in the industry.

*See c3controls Terms & Conditions

"We look to c3controls first for all our standard controls. c3controls has always given us the best mix of value, product selection, and lead times."

Pete Adam, Technical Sales Agent • **Energy Management Consultants**

620-S09, -S12, -S18, -S25

620-S32, -S40

620-S50, -S65, -S80

620-S95, -S105

UNIQUE PRODUCT LINE FEATURES

CONVENIENCE

Factory assembly of a Series 300 Contactor and Series 320 Overload Relay provides the convenience of a single catalog number and shorter control panel bill of material.

HIGH FAULT SCCR

High fault short circuit current rating of 100kA @ 480V and 600V with Class J fuses, provides safety and reliability in high fault applications.

INTEGRAL AUXILIARY

Integral auxiliary contacts, 3 power poles + 1 auxiliary, are standard on all c3controls 9A to 25A non-reversing contactors.

ADJUSTABLE CURRENT SETTINGS

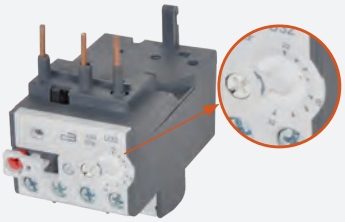

Full load current adjustment ratio of approximately 1:1.5 enables overload relay to be set to exact Full Load Ampere (FLA) of motor.

SELECTABLE RESET MODE

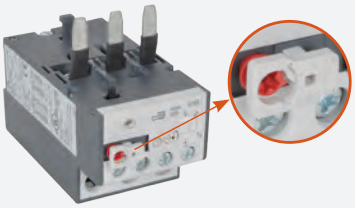

Manual or automatic reset and test modes, and stop button all in a single device for convenient control circuit wiring.

TRIP TEST FUNCTION

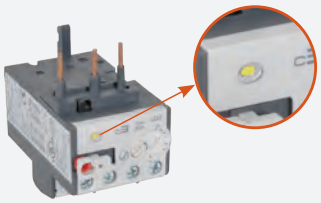

Trip test function comes standard on all c3controls Series 320-B2 to 320-B5 overload relays and allows for easier installation, testing, and troubleshooting.

FIND IT FAST

Contactor and Overload Relay Assemblies

- Certifications
- Specifications
- Dimension Drawings
- Installation Instructions
- Easy to Buy

www.c3controls.com

Motor Control Device Solutions

c3controls motor control devices are the perfect solution for manufacturers who want proper motor control and superior motor protection without having to overpay or compromise on quality. In fact, we engineer so much performance and flexibility into our products, we can deliver a remarkably better value than our competitors.

c3controls products deliver like no other.

Seamless Compatibility

Contactors, overload relays and motor protection circuit breakers are designed by c3controls to work together, with common connections and accessories, resulting in a high functioning compact starter.

LEADING THE INDUSTRY
with our compact miniature 10HP contactors and control relays. One frame size (AC or DC)—28% reduction in panel area.

Compact

The small size of c3controls motor control devices, plus features like common accessories, enable assembly into smaller control panels for lower installed costs.

Reliable Protection

Contactors provide the repeated on/off switching for the motor and are designed for motor, actuator, solenoid, and other power switching applications. Overload relays provide Trip Class 10 protection against overload and phase-loss conditions, and have ambient temperature compensation for motor protection in high temperature environments.

Ensures the protection of equipment and user.

Motor protection circuit breakers provide overload, phase-loss and short circuit protection, can be used by themselves as manual motor controllers or with contactors in group motor installations, and can achieve Type 2 coordination for optimum performance.

Type E self-protected combination manual motor controllers provide disconnecting means, branch circuit protection, motor control and motor overload protection all in a single device.

Proven

Our motor control devices are UL Listed and CE marked, meeting global standards requirements for use anywhere in the world.

NFPA 70 - National Electrical Code (NEC)

Understanding what functions are needed in your motor control circuit is critical when selecting motor control devices. Engineers benefit from the standards and codes established to ensure safety and protection to personnel and equipment.

More than just knowing the standards, c3controls, as a manufacturer of motor control products, has the application expertise you need to select the right products.

c3controls & Article 430 - Motors, Motor Circuits and Controllers

	To Supply	NEC Part	c3controls Product Series		
Motor disconnecting means		Part IX	330	630	Type E: 330 630
Motor branch-circuit, short circuit, and ground-fault protection		Part IV			Type E: 330 630
Motor circuit conductor		Part II			
Motor controller		Part VII	300/310 330	620 630	Type E: 330 630
Motor control circuits		Part VI			
Motor overload protection		Part III	320 330	620 630	Type E: 330 630
Motor		Part I			

Our motor control products align with Article 430 Part VII, Motor Controller, of the NFPA 70, the National Electrical Code.

IT'S EASY TO BUILD YOUR OWN DIRECT-ON-LINE (DOL) STARTER

Simply pick the code number from each of the sections below and combine them to build your part number.

Direct-On-Line Starters (Contactor + Overload Relay)

620 – ____ ____ ____ – ____

I *II* *III* *IV* *V*

Example: To build one of our most popular DOL Starters, the part number would be **620 + II + III + IV + V** or **620-S09D10-2D63**

I. STARTER TYPE

CODE	DESCRIPTION	LIST
620	Direct-On-Line (DOL) Starter: Series 300 Contactor + Series 320 Overload Relay	$ 25.00

II. NON-REVERSING CONTACTOR (3 NORMALLY OPEN POLES)

	MAX. Ie (A)		RATINGS FOR SWITCHING AC MOTORS - AC-2, AC-3										CONTACTOR CAT. NO.	
			kW (50Hz)				HP (60Hz)							
			3 PHASE				1 PHASE		3 PHASE					
CODE	AC-3	AC-1	230V	400/415V	500V	690V	115V	230V	200V	230V	460V	575V	PREFIX	LIST
S09	9	25	2.2	4	5.5	5.5	1/2	1-1/2	3	3	5	7-1/2	300-S09N30	$ 53.00
S12	12	25	3	5.5	7.5	7.5	3/4	2	3	3	7-1/2	10	300-S12N30	$ 79.00
S18	18	32	4	7.5	10	10	1	3	5	5	10	15	300-S18N30	$ 87.00
S25	25	45	7.5	11	15	15	2	3	7-1/2	7-1/2	15	15	300-S25N30	$ 99.00
S32	32	60	9	15	18.5	18.5	3	5	10	10	20	25	300-S32N30	$130.00
S40	40	60	11	18.5	25	30	3	5	10	15	30	25	300-S40N30	$178.00
S50	50	90	15	22	30	35	3	7-1/2	15	15	40	40	300-S50N30	$284.00
S65	65	110	18.5	30	40	45	5	10	20	20	50	50	300-S65N30	$350.00
S80	80	110	22	37	45	45	7-1/2	15	20	25	50	60	300-S80N30	$405.00
S95	95	140	25	45	55	55	7-1/2	15	25	30	60	75	300-S95N30	$500.00
S105	105	140	30	55	65	65	10	20	30	40	75	75	300-S105N30	$545.00

III. CONTACTOR COIL VOLTAGE CODE

AC COIL VOLTAGE CODES

VOLTAGE	12	24	48	110 / 120	208	220	230	240	277	400	400 ~ 415	480	500	550	600
50Hz	—	—	—	D	—	—	—	—	—	—	R	—	T	U	—
60Hz	—	—	—	D	L	—	—	F	P	—	—	R	—	—	T
50/60Hz	XB	XC	XJ	—	—	XAJ	XN	—	—	XAM	—	—	—	—	—

DC COIL VOLTAGE CODES

VOLTAGE	12	24	24 ~ 28	125	110 ~ 130	208 ~ 240	250	LIST
-S09 to -S25	ZB	ZC	—	ZQ	—	—	ZP	$ 35.00
-S32 to -S40	ZB	ZC	—	ZQ	—	—	ZP	$ 78.00
-S50 to -S105	—	—	EC	—	EL	EE	—	$282.00

IV. CONTACTOR AUXILIARY CONTACT CONFIGURATION

CODE	DESCRIPTION	LIST
00	Without Auxiliary Contacts (Contactors 300-S32 to 300-S105 only)	$ —
10	1 Normally Open*	$ 18.00
01	1 Normally Closed*	$ 18.00

*NOTE: Integral right side mounted on 9A ~ 25A contactors, front mounted on 32A ~ 105A contactors.

SEE OPPOSITE PAGE FOR PART BUILDER CHART V.

DISCOUNT SCHEDULE F

SOME OF OUR MOST POPULAR DOL STARTER CONFIGURATIONS

RATINGS FOR SWITCHING AC MOTORS, AC-2, AC-3												
	HP (60HZ)							CONTACTOR AUX. CONTACTS		CURRENT ADJUSTMENT		
MAX. IE (A)	1 PHASE		3 PHASE									
AC-3	115V	230V	200V	230V	460V	575V	COIL VOLTAGE	NO	NC	RANGE (A)*	CAT. NO.	LIST
9					1/2	1/2	120V 60Hz/110V 50Hz	1	0	0.8 ~ 1.2	620-S09D10-2D12	$158.00
					3/4	3/4	120V 60Hz/110V 50Hz	1	0	1.2 ~ 1.8	620-S09D10-2D18	$158.00
						1	120V 60Hz/110V 50Hz	1	0			
		1/6	1/2	1/2	1	1-1/2	120V 60Hz/110V 50Hz	1	0	1.8 ~ 2.8	620-S09D10-2D28	$158.00
						2	120V 60Hz/110V 50Hz	1	0			
		1/4	3/4	3/4	1-1/2	3	120V 60Hz/110V 50Hz	1	0	2.8 ~ 4.0	620-S09D10-2D40	$158.00
		1/3			2		120V 60Hz/110V 50Hz	1	0			
	1/6	1/2	1	1	3		120V 60Hz/110V 50Hz	1	0	4.0 ~ 6.3	620-S09D10-2D63	$158.00
	1/4						120V 60Hz/110V 50Hz	1	0			
	1/3	3/4	1-1/2	1-1/2		5	120V 60Hz/110V 50Hz	1	0	5.6 ~ 8.0	620-S09D10-2D80	$158.00
		1	2	2	5	7-1/2	120V 60Hz/110V 50Hz	1	0	7.0 ~ 10.0	620-S09D10-2U10	$158.00
	1/2	1-1/2	3	3			120V 60Hz/110V 50Hz	1	0	8 ~ 12.5	620-S09D10-2U12	$158.00
12					7-1/2	10	120V 60Hz/110V 50Hz	1	0	8 ~ 12.5	620-S12D10-2U12	$184.00
	3/4	2					120V 60Hz/110V 50Hz	1	0	10 ~ 15	620-S12D10-2U15	$184.00
18	1			5	10		120V 60Hz/110V 50Hz	1	0	11 ~ 17	620-S18D10-2U17	$192.00
		3	5			15	120V 60Hz/110V 50Hz	1	0	15 ~ 23	620-S18D10-2U23	$192.00
25				7-1/2	15		120V 60Hz/110V 50Hz	1	0	15 ~ 23	620-S25D10-2U23	$204.00
	2	5	7-1/2				120V 60Hz/110V 50Hz	1	0	22 ~ 32	620-S25D10-2U32	$204.00
32				10	20	20	120V 60Hz/110V 50Hz	1	0	15 ~ 23	620-S32D10-2U23	$235.00
		5				25	120V 60Hz/110V 50Hz	1	0	22 ~ 32	620-S32D10-2U32	$235.00
	3		10				120V 60Hz/110V 50Hz	1	0	25 ~ 40	620-S32D10-3U40	$267.00
40		5		10		25	120V 60Hz/110V 50Hz	1	0	22 ~ 32	620-S40D10-2U32	$283.00
	3				30		120V 60Hz/110V 50Hz	1	0	25 ~ 40	620-S40D10-3U40	$315.00
50	3	7-1/2		15	30	30	120V 60Hz/110V 50Hz	1	0	32 ~ 50	620-S50D10-4U50	$434.00
						40	120V 60Hz/110V 50Hz	1	0			
			15		40		120V 60Hz/110V 50Hz	1	0	40 ~ 57	620-S50D10-4U57	$434.00
65		10			40	50	120V 60Hz/110V 50Hz	1	0	40 ~ 57	620-S65D10-4U57	$500.00
	5			20			120V 60Hz/110V 50Hz	1	0	50 ~ 63	620-S65D10-4U63	$500.00
			20		50		120V 60Hz/110V 50Hz	1	0	57 ~ 70	620-S65D10-4U70	$500.00
80	5						120V 60Hz/110V 50Hz	1	0	50 ~ 63	620-S80D10-4U63	$555.00
		15		25	50	60	120V 60Hz/110V 50Hz	1	0	57 ~ 70	620-S80D10-4U70	$555.00
95			25		60	75	120V 60Hz/110V 50Hz	1	0	63 ~ 80	620-S95D10-5U80	$668.00
	7-1/2			30			120V 60Hz/110V 50Hz	1	0	78 ~ 97	620-S95D10-5U97	$668.00
105						75	120V 60Hz/110V 50Hz	1	0	63 ~ 80	620-S105D10-5U80	$713.00
		20	30				120V 60Hz/110V 50Hz	1	0	78 ~ 97	620-S105D10-5U97	$713.00
	10			40	75		120V 60Hz/110V 50Hz	1	0	90 ~ 112	620-S105D10-5X11	$713.00

*NOTE: HP ratings shown in the table above are for reference. The final selection of the overload relay must be based on the actual motor full load current.

V. OVERLOAD RELAY CURRENT ADJUSTMENT

CODE	INSTALLS ON CONTACTOR	CURRENT ADJUST. RANGE (A)	OVERLOAD RELAY CAT. NO.	LIST
2C40	-S09, -S12, -S18, -S25, -S32, -S40	0.28 ~ 0.40	320-B2C40	$ 62.00
2C63		0.40 ~ 0.63	320-B2C63	$ 62.00
2C80		0.56 ~ 0.80	320-B2C80	$ 62.00
2D12		0.80 ~ 1.2	320-B2D12	$ 62.00
2D18		1.2 ~ 1.8	320-B2D18	$ 62.00
2D28		1.8 ~ 2.8	320-B2D28	$ 62.00
2D40		2.8 ~ 4.0	320-B2D40	$ 62.00
2D63		4.0 ~ 6.3	320-B2D63	$ 62.00
2D80		5.6 ~ 8.0	320-B2D80	$ 62.00
2U10		7.0 ~ 10.0	320-B2U10	$ 62.00
2U12		8 ~ 12.5	320-B2U12	$ 62.00
2U15		10 ~ 15	320-B2U15	$ 62.00
2U17		11 ~ 17	320-B2U17	$ 62.00
2U23		15 ~ 23	320-B2U23	$ 62.00
2U32		22 ~ 32	320-B2U32	$ 62.00
3U40	-S32, -S40	25 ~ 40	320-B3U40	$ 94.00
4U50	-S50, -S65, -S80	32 ~ 50	320-B4U50	$107.00
4U57		40 ~ 57	320-B4U57	$107.00
4U63		50 ~ 63	320-B4U63	$107.00
4U70		57 ~ 70	320-B4U70	$107.00
5U80	-S95, -S105	63 ~ 80	320-B5U80	$125.00
5U97		78 ~ 97	320-B5U97	$125.00
5X11		90 ~ 112	320-B5X11	$125.00

Available Frame Sizes for DOL Starters

Direct-On-Line (DOL) Starters

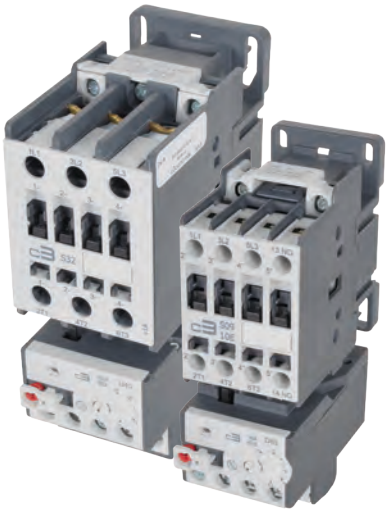

c3controls Series 620 Direct-On-Line (DOL) Starters are assemblies of a Series 300 Contactor and a Series 320 Overload Relay. The contactor provides the repeated On/Off switching for the motor. The overload relay includes Class 10 thermal trip elements for overload protection of the motor and motor branch circuit conductors. Small size, IP20 guarded terminals with dual terminal markings, and shared accessories will help reduce your total installed costs and enhance the features and performance of your equipment. Just look and see what our Series 620 assembled starters have to offer.

Product features include:

- High fault short circuit rating of 100kA @ 480V and 600V with Class J fuses, provides safety and reliability in high fault applications.
- Compact size – devices rated 25A include 3 power poles that are 45mm (1-49/64") wide reducing panel area requirements – smaller enclosures can be used for lower installed costs.
- Trip test function standard on Series 320-B2 to 320-B5 Overload Relays, allows for easier testing and troubleshooting.
- Modular design and common accessories including auxiliary contacts and surge suppressors.
- Snap-on accessories are easily installed without the use of tools, lowering assembly and installation costs.
- IP20 guarded terminals with dual terminal markings prevent accidental contact with live parts.
- Device identification marker for labeling the starter simplifies trouble shooting in panels with many devices.
- Universal ratings and markings: A, kW, and HP ratings as well as applicable 3rd party certification markings.
- Single phase sensitivity to protect motors against damaging phase loss conditions.
- Stop button for convenient and economical control circuit wiring.
- Ambient temperature compensation ensures reliable motor protection even in high temperature environments.
- Compact size – four (4) frame sizes for devices rated from 9A to 105A. Starters rated 15HP @ 460V (11kW @ 400V) are only 45mm (1-49/64") wide reducing panel area requirements – smaller enclosures can be used for lower installed costs.
- AC and DC operating coils for control circuit application flexibility. 50A to 105A DC operated devices feature electronic coil control.
- Single 35mm DIN rail mounting for all starters from 9A to 105A for fast and easy installation and removal or panel mounting for more secure installation in high shock and vibration applications. Our 9A to 25A starters are easily installed or removed without the use of tools.
- Unobstructed access to the two contactor coil terminals on the line-side of the starter makes control circuit wiring simple.
- All Series 300 Contactor and Series 320 Overload Relay features.

UNIQUE PRODUCT FEATURES

Multi-Function Relays

c3controls Series 320 Bimetallic Overload Relays feature a multi-function reset button enabling the user to select the reset mode – manual or automatic and whether or not to enable the test function.

When the reset button is pressed, with the test function enabled, the Normally Open (NO) contact closes and the Normally Closed (NC) contact opens to verify the control circuit functionality. In addition, the NC contact can be used in a "Stop" circuit. With the test function disabled, the NO and NC contacts do not change state when the reset button is pressed – preventing unauthorized personnel from operating the control circuit.

Multiple functions in a single device help you to reduce inventory and customize the overload relay operation to provide the performance and features you need for your specific application.

A – Automatic Reset Only
AUTO – Automatic Reset and Test
H – Manual Reset Only
HAND – Manual Reset and Test

Modular contactor accessories can be installed in the field on all starters. Front and side mounted auxiliary contacts are common to all starter sizes. Surge suppressors install easily and securely to the contactor coil terminals.

FRONT MOUNTED AUXILIARY CONTACTS

Our front mounted auxiliary contacts feature IP20 guarded terminals to protect against accidental contact with live parts. The device identification marker simplifies trouble shooting in panels with many contactors. These contacts snap-on and install without the use of tools. NOTE: See chart below for maximum number of front mounted auxiliary contacts. *See Contactor Section 4 Page 10 for front mounted auxiliary contact part number and ordering information.*

MAXIMUM NUMBER OF FRONT OR SIDE MOUNTED AUXILIARY CONTACTS

CONTACTOR	MAXIMUM NUMBER
S09, S12, S18, S25	4
S32, S40	6
S50, S65, S80, S95, S105	8

SURGE SUPPRESSORS

Coil mounted surge suppressors protect sensitive electronic components in control circuits from damaging line voltage spikes. *See Contactor Section 4 Page 11 for surge suppressor part number and ordering information.*

SIDE MOUNTED AUXILIARY CONTACTS

Side mounted auxiliary contacts feature IP20 guarded terminals to protect against accidental contact with live parts. NOTE: See chart at left for maximum number of side mounted auxiliary contacts. *See Contactor Section 4 Page 10 for side mounted auxiliary contact part number and ordering information.*

OPERATING COILS

Replacement coils for use with S09 - S105 Contactors. *See Contactor Section 4 Page 12 for operating coil part number and ordering information.*

SERIES 620 DOL STARTER CIRCUIT DIAGRAMS

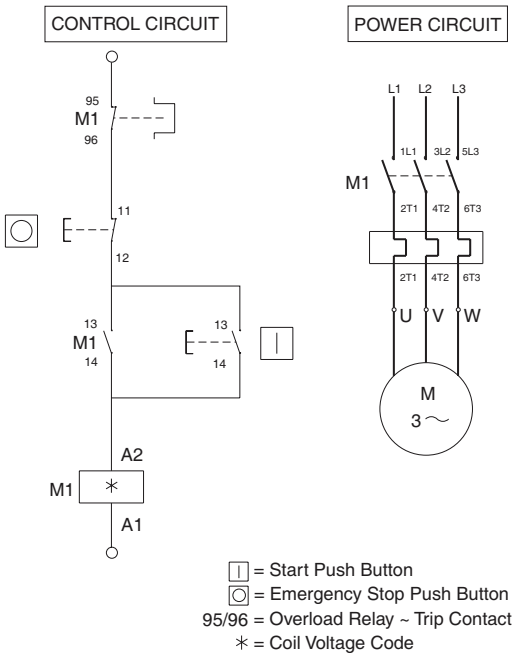

DISCOUNT SCHEDULE F

Specifications:

SERIES 620 DIRECT-ON-LINE (DOL) STARTER SPECIFICATIONS												
		STARTER CURRENT RATING CODE										
	UNITS	S09	S12	S18	S25	S32	S40	S50	S65	S80	S95	S105
ELECTRICAL GENERAL												
		For detailed contactor specifications by starter rating code, see Section 4 Page 13										
		For detailed overload relay specifications by catalog number prefix, see Section 6 Page 8										
Rated Operating Frequency	Hz	25 ~ 400										
Rated Control Frequencies	Hz	AC: 50Hz, 60Hz, 50/60Hz and DC										
ELECTRICAL UL/CSA APPLICATIONS												
		For detailed contactor specifications by starter rating code, see Section 4 Page 13										
		For detailed overload relay specifications by catalog number prefix, see Section 6 Page 8										
Rated Operating Voltage, Ue	VAC	600										
Standard Short Circuit Current @ 600V AC	kA	5						10				
Maximum Fuse Size - varies by current adjustment range of overload relay	A	30	30	60	60	60	60	100	125	150	175	200
High Fault Short Circuit Current @ 600V AC	kA	100										
Maximum Fuse Size (Class J) - varies by current adjustment range of overload relay	A	25	25	40	40	50	60	90	100	125	150	175
ELECTRICAL IEC APPLICATIONS												
		For detailed contactor specifications by starter rating code, see Section 4 Page 13										
		For detailed overload relay specifications by catalog number prefix, see Section 6 Page 8										
Rated Insulation Voltage, Ui	V	1,000										
Rated Impulse Voltage, Uimp	kV	6						8				
Rated Operating Voltage, Ue	VAC	690										
COIL CHARACTERISTICS												
		For detailed contactor specifications by starter rating code, see Section 4 Page 14										
Rated Insulation Voltage, Ui	V	1,000										
Operating Limits		80 ~ 110% of Rated Coil Voltage										
MECHANICAL												
		For detailed contactor specifications by starter rating code, see Section 4 Page 15										
ENVIRONMENTAL												
		For detailed contactor specifications by starter rating code, see Section 4 Page 15										
		For detailed overload relay specifications by catalog number prefix, see Section 6 Page 8										
Ambient Operating Temperature	°C / °F	-25 to +55 / -13 to +131										
Ambient Storage Temperature	°C / °F	-40 to +70 / -104 to +158										
Altitude	m / ft.	2,000 / 6,528										
CONSTRUCTION - GENERAL												
		For detailed contactor specifications by starter rating code, see Section 4 Page 15										
		For detailed overload relay specifications by catalog number prefix, see Section 6 Page 9										
Number of Poles		3										
Pollution Degree		3										
Trip Class		10										
INGRESS PROTECTION												
Main Terminals (with conductors connected)		IP20										
Coil Terminals		IP20										
Auxiliary Contact Terminals		IP20										
CONSTRUCTION - CONDUCTOR CROSS SECTIONS		For detailed contactor specifications by starter rating code, see Section 4 Page 15										
		For detailed overload relay specifications by catalog number prefix, see Section 6 Page 9										
ROHS COMPLIANCE		For RoHS compliance documentation by product, refer to www.c3controls.com.										

CONTACTOR + OVERLOAD RELAY ASSEMBLIES - AC COIL

300-S09, 300-S12, 300-S18 or 300-S25 Contactor with 320-B2*** Overload Relay

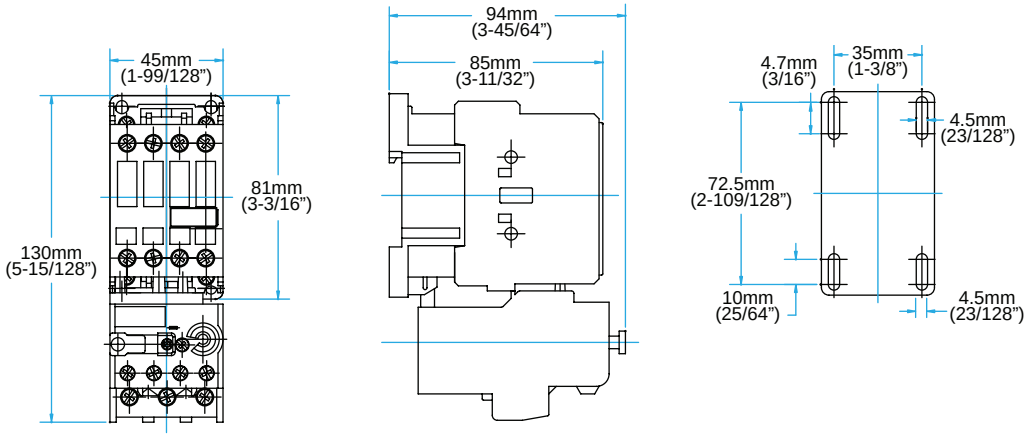

300-S32 or 300-S40 Contactor with 320-B2*** Overload Relay

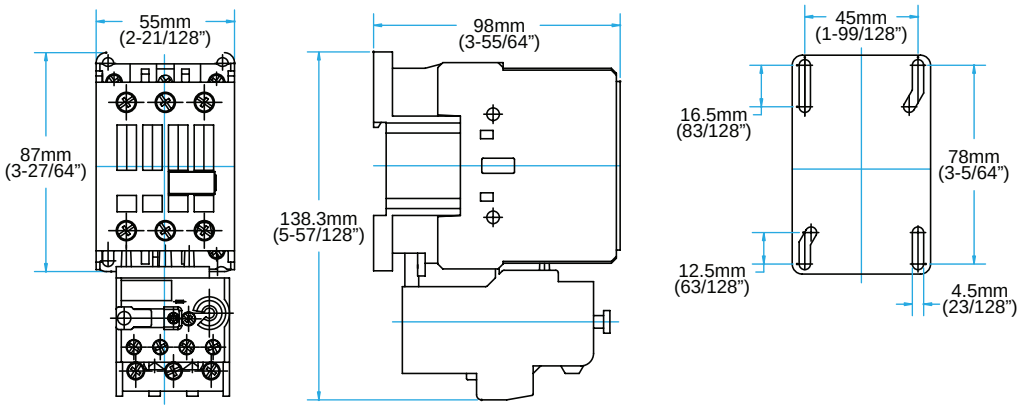

300-S32 or 300-S40 Contactor with 320-B3U40 Overload Relay

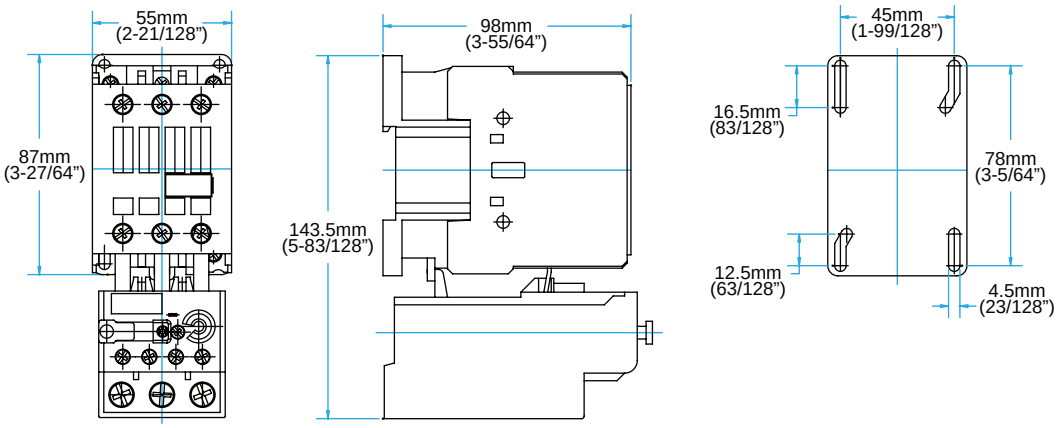

NOTE: *** Represents the overload relay current adjustment code. Refer to page 7.

CONTACTOR + OVERLOAD RELAY ASSEMBLIES - AC COIL (CONT.)

300-S50, 300-S65 or 300-S80 Contactor with 320-B4*** Overload Relay

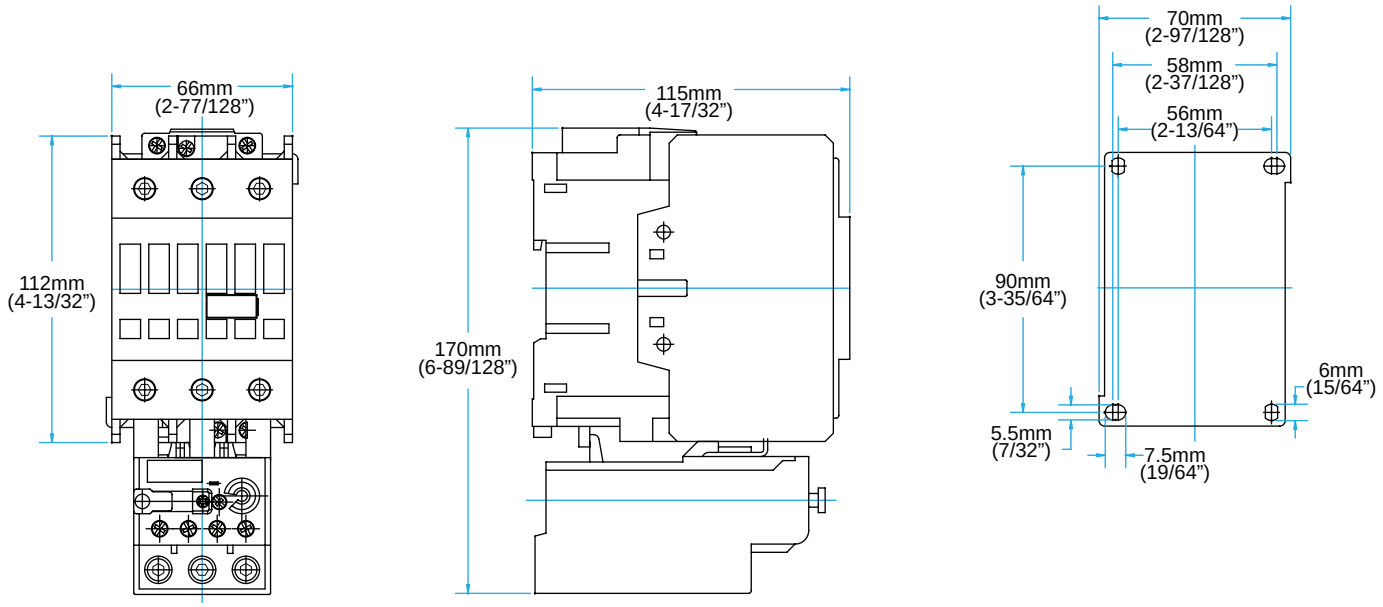

300-S95 or 300-S105 Contactor with 320-B5*** Overload Relay

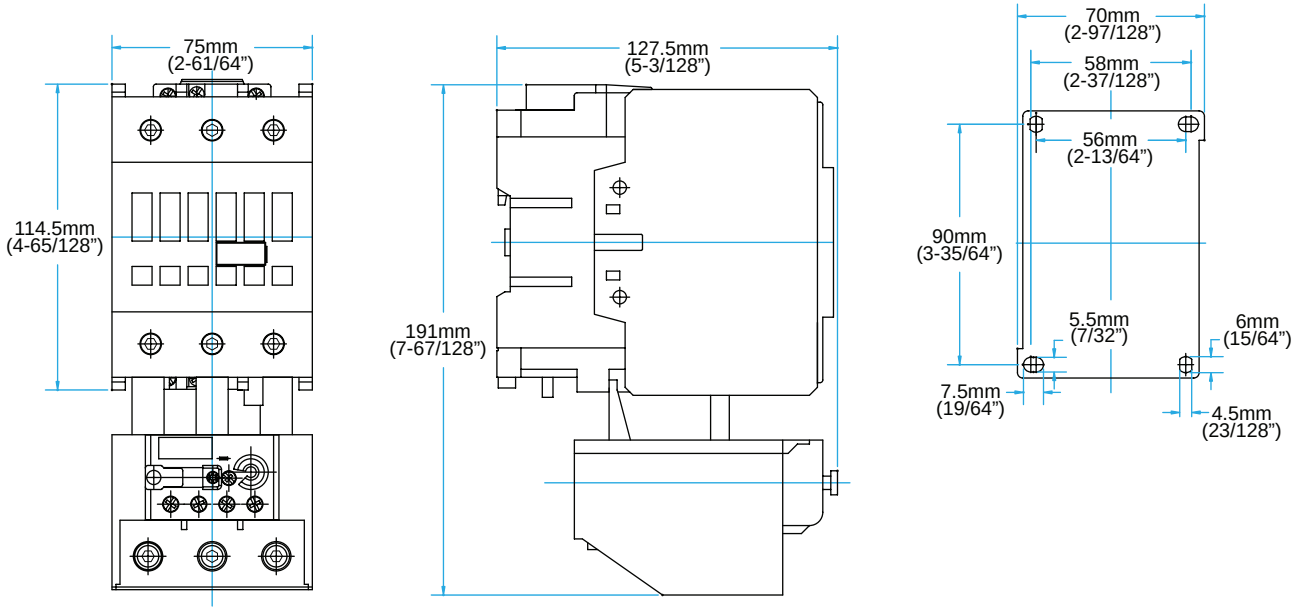

NOTE: *** Represents the overload relay current adjustment code. Refer to page 7.

CONTACTOR + OVERLOAD RELAY ASSEMBLIES - DC COIL

300-S09, 300-S12, 300-S18 or 300-S25 Contactor with 320-B2*** Overload Relay

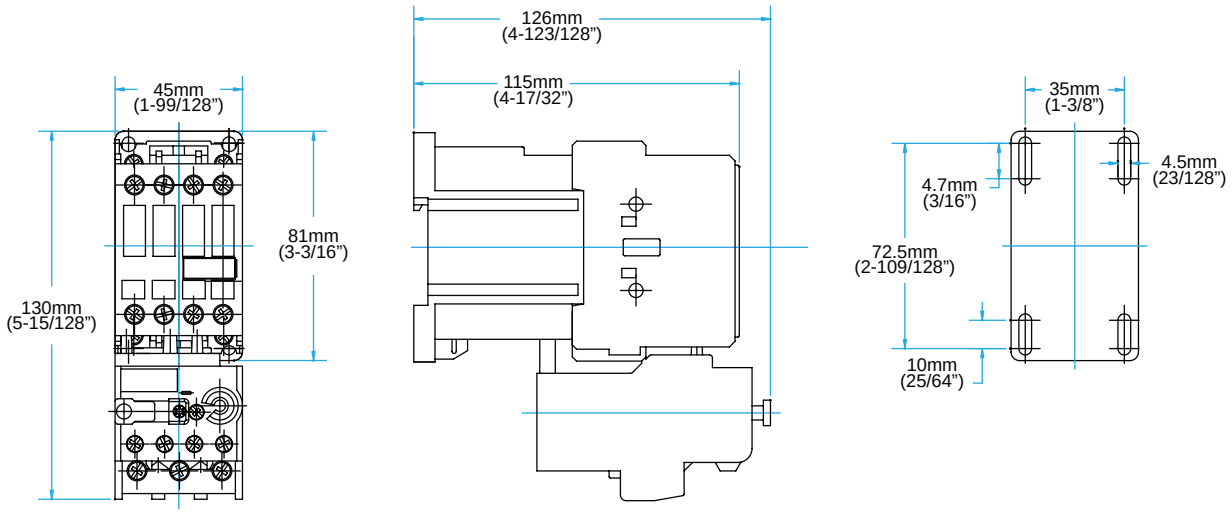

300-S32 or 300-S40 Contactor with 320-B2*** Overload Relay

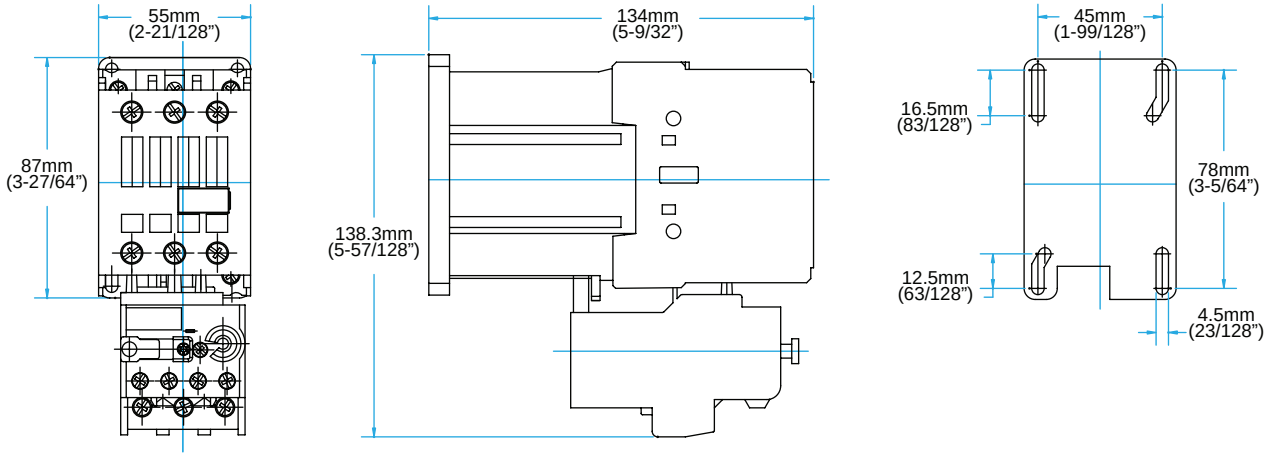

NOTE: *** Represents the overload relay current adjustment code. Refer to page 7.

VISIT WWW.C3CONTROLS.COM TO DOWNLOAD CAD DRAWINGS

CONTACTOR + OVERLOAD RELAY ASSEMBLIES - DC COIL (CONT.)

300-S50, 300-S65 or 300-S80 Contactor with 320-B4*** Overload Relay

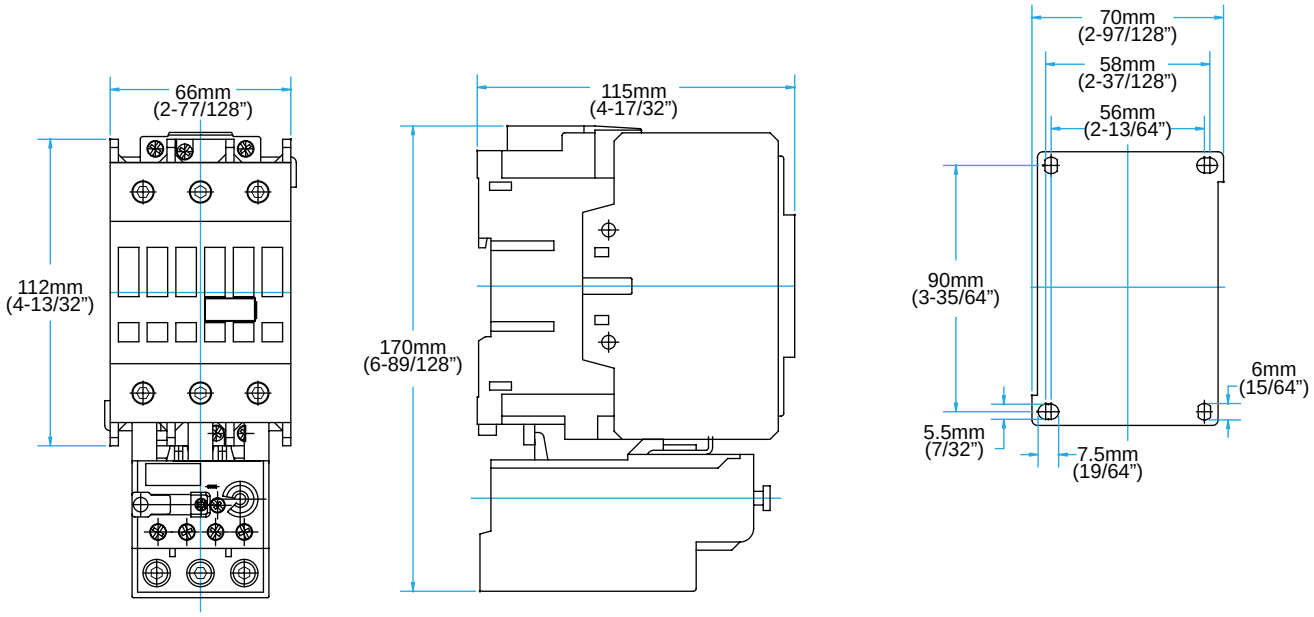

300-S95 or 300-S105 Contactor with 320-B5*** Overload Relay

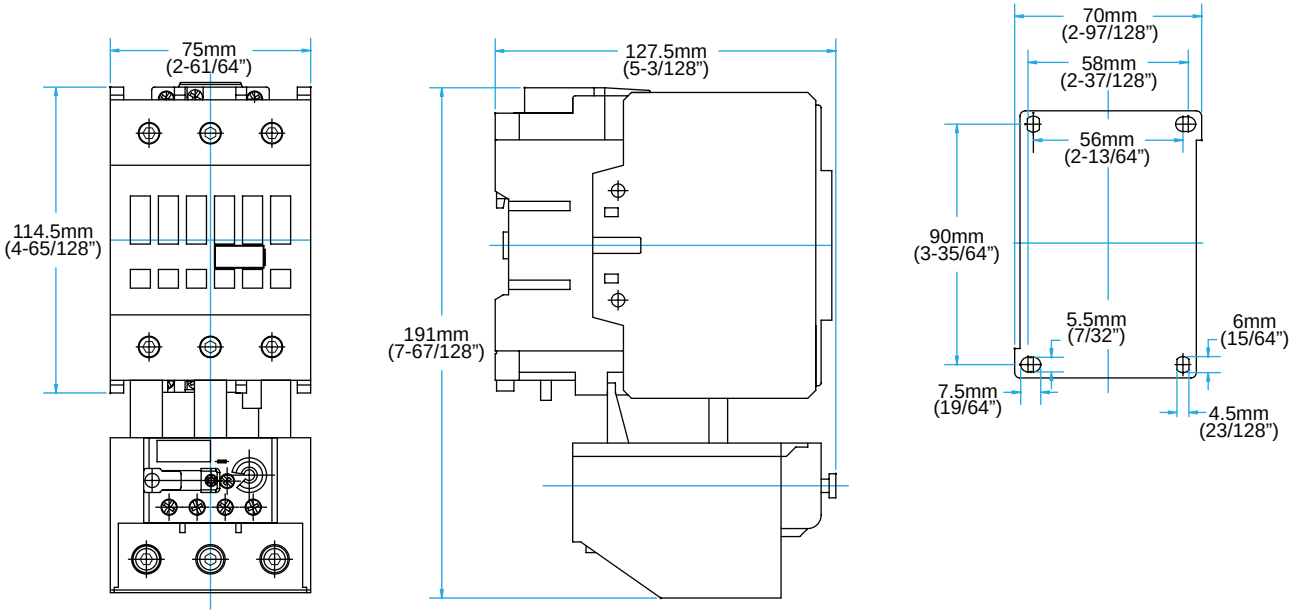

NOTE: *** Represents the overload relay current adjustment code. Refer to page 7.

ENCLOSED CONTACTOR & OVERLOAD RELAY ASSEMBLIES

series E620

For compact starters that offer reliable protection for your motors and perform in the most demanding situations, c3controls Enclosed Direct-On-Line (DOL) Starters are what you need. Our Series E620 comes pre-assembled with our Series 300 Contactor, Series 320 Overload Relay, and 22mm IEC pilot devices, all within the protection of our durable polycarbonate enclosure. With its compact size and factory wiring, our Series E620 is engineered to save you panel space, cost, and valuable time during installation.

Section 8

Enclosed Direct-On-Line Starters Contactor + Overload Relay	6
Specifications	9
Dimensions	10

PROVEN

Conformity to Standards:

CONTACTORS
UL 508, 60947-4-1
CSA C22.2 No. 14
IEC 60947-1, 60947-4-1

OVERLOAD RELAYS
UL 508, 60947-4-1
CSA C22.2 No. 14
IEC 60947-1, 60947-4-1

ENCLOSURES
UL 50
CSA C22.2 No. 94
IEC 60529

Certifications:

UL File #: E236197 (Guide NLDX, NLDX7), E68568 (Guide NKCR, NKCR7)

CE Marked (per EU Low Voltage Directive 2006/95/EC and RoHS Directive 2011/65/EU)

UL File #: E68568 (Guide NKCR, NKCR7)

CE Marked (per EU Low Voltage Directive 2006/95/EC and RoHS Directive 2011/65/EU)

UL Listed
CSA Certified

Visit www.c3controls.com to download product certifications.

NOTE: The scope (range, description, price, specifications, dimensions, etc.) of the product featured in this section is subject to change without notice. Refer to www.c3controls.com for product updates.

ENCLOSED CONTACTOR & OVERLOAD RELAY ASSEMBLIES

c3controls offers a comprehensive line of Motor Control products designed and manufactured to meet the needs of the machine builder. We promise durable products at a price that gives you an edge. Check out all the features of our Series E620 Enclosed Contactor and Overload Relay Assemblies below!

DELIVERING SUPERIOR PRODUCT QUALITY AND MANUFACTURING EXCELLENCE

✓ **Proven**	Our Series E620 Enclosed DOL Starters are UL Listed and CE marked meeting global standards requirements.
✓ **Compact Size**	Four (4) frame sizes for devices rated from 9A to 65A. Starters rated 15HP @ 460V (11kW @ 400V) are only 45mm (1-49/64") wide reducing panel area requirements – smaller enclosures can be used for lower installed costs.
✓ **Simple Customization**	Our Series E620 Enclosed DOL Starters come with various pilot device and wiring options for appropriate operator interface.
✓ **Polycarbonate Enclosures**	Available in two sizes, our polycarbonate enclosures come with a lift-off cover, and are rated Type 1, 4/4X, and IP66 for the most demanding applications—including wash-downs and corrosive environments.
✓ **Visible Markings**	High visibility labels and markings; dual IEC and NEMA terminal markings for ease of wiring anywhere in the world.
✓ **Lower Cost**	Snap-on front mounted and side mounted auxiliary contacts install without the use of tools for lower installed costs.
✓ **Environmentally Secure**	With 4/4X and IP66, our E620 line is built to last and withstand dust, corrosion, ice and rain.
✓ **Added Safety**	IP66 guarded terminals with dual terminal markings prevent accidental contact with live parts.
✓ **Limited Lifetime Warranty***	Every product is backed by our limited lifetime warranty—unmatched in the industry—bringing you quality components that perform in the most demanding applications.
✓ **Quick Shipment**	We assemble, test and ship within 3 days, including legend plates—and confirm every order ensuring accuracy.
✓ **Advantage Pricing**	Our approach to product development, manufacturing, and focus on servicing the OEM and Electrical Equipment Builder reduces cost. The result—the best value in the industry.

*See c3controls Terms & Conditions

> *"Once we switched to c3controls' Series 300 Contactors and Series 320 Overload Relays, we immediately reduced field failures and maintenance costs."*

Craig Boozer, AVP Electrical/Technical Support • **Ice House America**

Type F Enclosure
(180mm x 130mm x 127mm)

Type G Enclosure
(255mm x 180mm x 177mm)

UNIQUE PRODUCT LINE FEATURES

FACTORY ASSEMBLED AND WIRED

Factory assembled and wired starters and pilot devices provide the convenience of a single catalog number and a shorter control panel bill of material.

HIGH FAULT SCCR

High fault short circuit current rating of 100kA @ 480V and 600V with Class J fuses, provides safety and reliability in high fault applications.

INTEGRAL AUXILIARY

Integral auxiliary contacts, 3 power poles + 1 auxiliary, are standard on all c3controls 9A to 25A non-reversing contactors.

ADJUSTABLE CURRENT SETTING

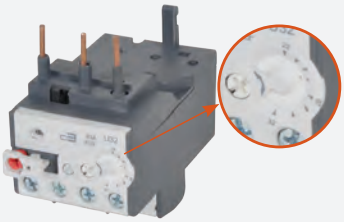

Full load current adjustment ratio of approximately 1:1.5 enables overload relay to be set to exact FLA of motor.

SELECTABLE RESET MODE

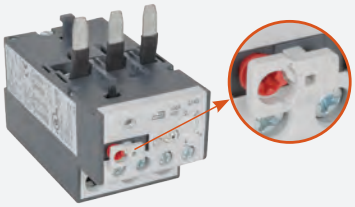

Manual or automatic reset and test modes, and stop button all in a single device for convenient control circuit wiring.

TRIP TEST FUNCTION

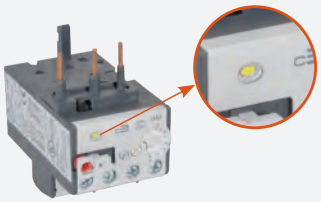

Trip test function standard on all c3controls Series 320-B2 to 320-B5 overload relays, allows for easier installation, testing, and troubleshooting.

FIND IT FAST

Enclosed Contactor and Overload Relay Assemblies

- Certifications
- Specifications
- Dimension Drawings
- Installation Instructions
- Easy to Buy

www.c3controls.com

Motor Control Device Solutions

c3controls motor control devices are the perfect solution for manufacturers who want proper motor control and superior motor protection without having to overpay or compromise on quality. In fact, we engineer so much performance and flexibility into our products, we can deliver a remarkably better value than our competitors.

c3controls products deliver like no other.

Seamless Compatibility

Contactors, overload relays and motor protection circuit breakers are designed by c3controls to work together, with common connections and accessories, resulting in a high functioning compact starter.

LEADING THE INDUSTRY
with our compact miniature 10HP contactors and control relays. One frame size (AC or DC)—28% reduction in panel area.

Compact

The small size of c3controls motor control devices, plus features like common accessories, enable assembly into smaller control panels for lower installed costs.

Reliable Protection

Contactors provide the repeated on/off switching for the motor and are designed for motor, actuator, solenoid, and other power switching applications. Overload relays provide Trip Class 10 protection against overload and phase-loss conditions, and have ambient temperature compensation for motor protection in high temperature environments.

Ensures the protection of equipment and user.

Motor protection circuit breakers provide overload, phase-loss and short circuit protection, can be used by themselves as manual motor controllers or with contactors in group motor installations, and can achieve Type 2 coordination for optimum performance.

Type E self-protected combination manual motor controllers provide disconnecting means, branch circuit protection, motor control and motor overload protection all in a single device.

Proven

Our motor control devices are UL Listed and CE marked, meeting global standards requirements for use anywhere in the world.

NFPA 70 - National Electrical Code (NEC)

Understanding what functions are needed in your motor control circuit is critical when selecting motor control devices. Engineers benefit from the standards and codes established to ensure safety and protection to personnel and equipment.

More than just knowing the standards, c3controls, as a manufacturer of motor control products, has the application expertise you need to select the right products.

c3controls & Article 430 - Motors, Motor Circuits and Controllers

	To Supply	NEC Part	c3controls Product Series		
Motor disconnecting means		Part IX	330	630	Type E: 330 630
Motor branch-circuit, short circuit, and ground-fault protection		Part IV			Type E: 330 630
Motor circuit conductor		Part II			
Motor controller		Part VII	300/310 330	620 630	Type E: 330 630
Motor control circuits		Part VI			
Motor overload protection		Part III	320 330	620 630	Type E: 330 630
Motor		Part I			

Our motor control products align with Article 430 Part VII, Motor Controller, of the NFPA 70, the National Electrical Code.

IT'S EASY TO BUILD YOUR OWN ENCLOSED DOL STARTER

Simply pick the code number from each of the sections below and combine them to build your part number.

Enclosed Direct-On-Line (DOL) Starters

E620 – ____ ____ ____ – ____ – ____ ____ – ____ ____ – ____

I II III IV V VI VII VIII IX X

Example: To build one of our most popular Enclosed DOL Starters, the part number would be **E620 + II + III + IV + V + VI + VII + VIII + IX + X** or **E620-GD10-52-FR-08-W3**

I. ENCLOSED STARTER TYPE

CODE	DESCRIPTION	LIST
E620	Enclosed Series 620 DOL Starter: Series 300 Contactor + Series 320 Overload Relay	$ 38.00

II. NON-REVERSING CONTACTOR (3 NORMALLY OPEN POLES)

	MAX. Ie (A)		RATINGS FOR SWITCHING AC MOTORS - AC-2, AC-3											
			kW (50Hz)				HP (60Hz)						CONTACTOR CAT. NO. PREFIX	
			3 PHASE				1 PHASE		3 PHASE					
CODE	AC-3	AC-1	230V	400/415V	500V	690V	115V	230V	200V	230V	460V	575V		LIST
G	9	25	2.2	4	5.5	5.5	1/2	1-1/2	3	3	5	7-1/2	300-S09N30	$ 53.00
H	12	25	3	5.5	7.5	7.5	3/4	2	3	3	7-1/2	10	300-S12N30	$ 79.00
J	18	32	4	7.5	10	10	1	3	5	5	10	15	300-S18N30	$ 87.00
K	25	45	7.5	11	15	15	2	3	7-1/2	7-1/2	15	15	300-S25N30	$ 99.00
L	32	60	9	15	18.5	18.5	3	5	10	10	20	25	300-S32N30	$130.00
M	40	60	11	18.5	25	30	3	5	10	15	30	25	300-S40N30	$178.00
N	50	90	15	22	30	35	3	7-1/2	15	15	40	40	300-S50N30	$284.00
P	65	110	18.5	30	40	45	5	10	20	20	50	50	300-S65N30	$350.00
Q	80	110	22	37	45	45	7-1/2	15	20	25	50	60	300-S80N30	$405.00

III. CONTACTOR COIL VOLTAGE CODE

AC COIL VOLTAGE CODES

VOLTAGE	12	24	48	110 / 120	208	220	230	240	277	400	400 ~ 415	480	500	550	600
50Hz	—	—	—	D	—	—	—	—	—	—	R	—	T	U	—
60Hz	—	—	—	D	L	—	—	F	P	—	—	R	—	—	T
50/60Hz	XB	XC	XJ	—	—	XAJ	XN	—	—	XAM	—	—	—	—	—

DC COIL VOLTAGE CODES

VOLTAGE	12	24	24 ~ 28	125	110 ~ 130	208 ~ 240	250	LIST
9-25A (G to K)	ZB	ZC	—	ZQ	—	—	ZP	$ 35.00
32-40A (L & M)	ZB	ZC	—	ZQ	—	—	ZP	$ 78.00
50-80A (N to Q)	—	—	EC	—	EL	EE	—	$282.00

IV. CONTACTOR AUXILIARY CONTACT CONFIGURATION

CODE	DESCRIPTION	LIST
00	Without Auxiliary Contacts (Contactor Codes L to Q)	—
10	1 Normally Open* (Contactor Codes G to K)	$ 18.00
01	1 Normally Closed* (Contactor Codes G to K)	$ 18.00
20	2 Normally Open* (Contactor Codes L to Q)	$ 31.00
11	1 Normally Open and 1 Normally Closed* (Contactor Codes L to Q)	$ 31.00

*NOTE: Integral right side mounted on Contactor Codes G to K, side mounted on Contactor Codes L to Q.

DISCOUNT SCHEDULE **H**

SEE OPPOSITE PAGE FOR PART BUILDER CHARTS V – X

ENCLOSED DOL STARTER PART BUILDER (CONT.)

V. OVERLOAD RELAY CURRENT ADJUSTMENT

CODE	INSTALLS ON CONTACTOR	CURRENT ADJUST. RANGE (A)	OVERLOAD RELAY CAT. NO.	LIST
43	G, H J, K L, M	0.28 ~ 0.40	320-B2C40	$ 62.00
44		0.40 ~ 0.63	320-B2C63	$ 62.00
45		0.56 ~ 0.80	320-B2C80	$ 62.00
46		0.80 ~ 1.2	320-B2D12	$ 62.00
47		1.2 ~ 1.8	320-B2D18	$ 62.00
48		1.8 ~ 2.8	320-B2D28	$ 62.00
49		2.8 ~ 4.0	320-B2D40	$ 62.00
50		4.0 ~ 6.3	320-B2D63	$ 62.00
51		5.6 ~ 8.0	320-B2D80	$ 62.00
52		7.0 ~ 10.0	320-B2U10	$ 62.00
53		8.0 ~ 12.5	320-B2U12	$ 62.00
54		10 ~ 15	320-B2U15	$ 62.00
55		11 ~ 17	320-B2U17	$ 62.00
56		15 ~ 23	320-B2U23	$ 62.00
57		22 ~ 32	320-B2U32	$ 62.00
58	L, M	25 ~ 40	320-B3U40	$ 94.00
59	N, P, Q	32 ~ 50	320-B4U50	$107.00
60		40 ~ 57	320-B4U57	$107.00
61		50 ~ 63	320-B4U63	$107.00
62		57 ~ 70	320-B4U70	$107.00

VI. POLYCARBONATE ENCLOSURE DIMENSION (TYPE 4X & IP66)

CODE	FOR CONTACTOR CODES	DIMENSION REF. / H x W x D	LIST
F	AC: G, H, J, K	1 / 180mm x 130mm x 127mm	$ 87.00
G	AC & DC: G, H, J, K, L, M, N, P, Q	2 / 255mm x 180mm x 177mm	$270.00

VII. 22MM IEC RESET PUSH BUTTON OPTIONS

CODE	CAP TYPE / COLOR	CAP MARKING	LIST
(Blank)	None	—	—
R	Flush / Blue	No Marking	$ 14.40
R102	Flush / Blue	R	$ 17.40

IX. 22MM IEC UNIBODY PILOT LIGHT OPTIONS

CODE	DESCRIPTION	LED/LENS COLOR	CAT. NO.	LEGEND PLATE†
(Blank)	None	—	—	—
A	Non-Relampable	Amber	W22UNR-***LA-WNLA	FAULT
G	Non-Relampable	Green	W22UNR-***LG-WNLG	RUN
R	Non-Relampable	Red	W22UNR-***LR-WNLR	RUN

NOTE: † The legend plate face color is black with white letters.
*** Represents the Unibody pilot light voltage code. Voltage code will be based on the contactor coil voltage.

X. WIRING OPTIONS

CODE	DESCRIPTION	FOR PILOT DEVICE CODES	FOR PILOT LIGHT CODES	WIRING DIAGRAM REF.†	LIST
WW	Without Wiring	ALL	ALL	—	—
W2	Two Wire Control Wiring	03, 04	(Blank), G*, R*	1a	$ 18.00
		04	A	1b	
		05, 06	(Blank), G*, R*	2a	
		06	A	2b	
W3	Three Wire Control Wiring*‡	01, 02, 08, 09	(Blank), G, R	3a	$ 18.00
		02, 09	A	3b	

NOTE: * Contactor Auxiliary Contact Configuration Codes 00 and 01 cannot be used.
‡ Use W3 for Remote Wiring, refer to the installation instructions for details.
† For wiring diagrams go to www.c3controls.com.

SEE TOP OF PAGE FOR PART BUILDER CHARTS IX – X

VIII. 22MM IEC PILOT DEVICE OPTIONS

CODE	DESCRIPTION	22MM CAT. NO.	LEGEND PLATE†	LIST
00	None	—	—	—
01	Momentary, Non-Illuminated Push Buttons:			$ 44.20
	Flush Green with 1NO Contact Block	W22PB-FG-10	START	
	Extended Red with 1NC Contact Block	W22PB-ER-01	STOP	
02	Momentary, Non-Illuminated Push Buttons with Pilot Light:			$ 63.20
	Flush Green with 1NO Contact Block	W22PB-FG-10	START	
	Extended Red with 1NC Contact Block	W22PB-ER-01	STOP	
	Unibody, Non-Relampable*	Refer to Chart IX	Refer to Chart IX	
03	Maintained, Non-Illuminated Selector Switch:			$ 27.20
	2-Position with 1NO Contact Block	W22S2-HW-10	OFF , ON	
04	Maintained, Non-Illuminated Selector Switch with Pilot Light:			$ 46.20
	2-Position with 1NO Contact Block	W22S2-HW-10	OFF , ON	
	Unibody, Non-Relampable*	Refer to Chart IX	Refer to Chart IX	
05	Maintained, Non-Illuminated Selector Switch:			$ 39.30
	3-Position with 2NO Contact Blocks	W22S3-HW-10/10	H , O , A	
06	Maintained, Non-Illuminated Selector Switch with Pilot Light:			$ 58.30
	3-Position with 2NO Contact Blocks	W22S3-HW-10/10	H , O , A	
	Unibody, Non-Relampable*	Refer to Chart IX	Refer to Chart IX	
07	Pilot Light:			$ 19.00
	Unibody, Non-Relampable*	Refer to Chart IX	Refer to Chart IX	
08	Momentary, Non-Illuminated Dual Push Buttons:			$ 40.20
	Extended Red (Bottom) with 1NC Contact Block and Flush Green (Top) with 1NO Contact Block	W22DPB-ERFG-01/10	—	
09	Momentary, Non-Illuminated Dual Push Buttons with Pilot Light:			$ 59.20
	Extended Red (Bottom) with 1NC Contact Block and Flush Green (Top) with 1NO Contact Block	W22DPB-ERFG-01/10	—	
	Unibody, Non-Relampable*	Refer to Chart IX	Refer to Chart IX	

NOTE: * Pilot lights only available if Contactor Coil Voltage Code (III) XC, D, XAJ, XN, F, ZC or ZQ is selected. Pilot light voltage will be 24V AC/DC, 110-130V AC/DC, or 220-240V AC to match contactor coil voltage. Pilot lights can only be used with a Contactor Code K with an auxiliary contact in Enclosure Code G.
† The legend plate face color is black with white letters.

Series E620 Enclosed Direct-On-Line (DOL) Starters

c3controls Series E620 Enclosed Direct-On-Line (DOL) Starters are assemblies of a Polycarbonate Enclosure, Series 300 Contactor, Series 320 Overload Relay, and Series 22mm IEC pilot devices. Our pilot devices and enclosures are rated for Type 4X and IP65. The contactor provides the repeated On/Off switching for the motor, and the overload relay includes Class 10 thermal trip elements for overload protection of the motor and motor branch circuit conductors. A variety of pilot devices are available, including non-illuminated momentary push buttons, non-illuminated momentary dual push buttons (flush green, extended red and blue reset), maintained selector switches (2- and 3-position), auxiliary contacts (NO and NC) and pilot lights (red, green and amber) for operation and indication. To save time and reduce installation cost, c3controls Series E620 are factory assembled and wired. We also offer the option of no pre-wiring.

Product features include:

- High fault short circuit rating of 100kA @ 480V and 600V with Class J fuses, provides safety and reliability in high fault applications.
- Visible trip indication on Series 320 provides clear indication of what device has tripped, simplifies troubleshooting in panels with many devices.
- Trip test function standard on Series 320-B2 to 320-B5 Starters, allows for easier testing, installation, and troubleshooting.
- Lower power consumption for Series 300-S32 to 300-S40 DC Contactors, reducing power supply size, saving space and money.
- Enhanced markings and high visibility labels for ease of troubleshooting and maintenance.
- Enclosed starters provide convenience of a single catalog number.
- Provides the same great features and benefits as our Enclosures, Series 300 Contactors, Series 320 Overload Relays and Series 22mm IEC pilot devices.
- Our compact, Polycarbonate enclosures come with a lift-off cover and are rated Type 1, 4/4X and IP66, making them suitable for the most demanding applications – including wash-downs and corrosive environments.
- Pilot devices installation and a variety of wiring options are available.
- Compact starter size reduces enclosure size resulting in space savings and lower installed costs.
- A wide variety of AC and DC operating coils for control circuit application flexibility. 50A to 80A DC operated devices feature electronic coil control.
- Universal ratings and markings: A, kW, and HP ratings as well as applicable 3rd party certification markings.
- Single phase sensitivity to protect motors against damaging phase loss conditions.
- The cover mounted Reset push button allows the starter to be reset from outside the enclosure.
- Ambient temperature compensation ensures reliable motor protection even in high temperature environments.
- Unobstructed access to the two contactor coil terminals on the line-side of the starter makes control circuit wiring simple.
- Shares common accessories with Series 300 Contactors, see Section 4 Pages 10-12.

UNIQUE PRODUCT FEATURES

Multi-Function Relays

Multi-function reset button enables the user to select the reset mode, manual or automatic, and whether or not to enable the test function.

When the reset button is pressed and the test function is enabled, the Normally Open (NO) contact closes and the Normally Closed (NC) contact opens to verify the control circuit functionality. In addition, the NC contact can be used in a "Stop" circuit. With the test function disabled, the NO and NC contacts do not change state when the reset button is pressed – preventing unauthorized personnel from operating the control circuit.

Multiple functions allow you to customize the overload relay operation to provide the performance and features you require for your application.

Factory Assembled and Wired

Convenient and reliable factory wired starters and pilot devices save time and reduce installation cost.

Specifications:

SERIES E620 ENCLOSED DIRECT-ON-LINE (DOL) STARTER SPECIFICATIONS										
		STARTER CURRENT RATING CODE								
	UNITS	G	H	J	K	L	M	N	P	Q
ELECTRICAL GENERAL										
		For detailed contactor specifications by starter rating code, see Section 4 Page 13								
		For detailed overload relay specifications by catalog number prefix, see Section 6 Page 8								
Rated Operating Frequency	Hz	25 ~ 400								
Rated Control Frequencies	Hz	AC: 50Hz, 60Hz, 50/60Hz and DC								
ELECTRICAL UL/CSA APPLICATIONS										
		For detailed contactor specifications by starter rating code, see Section 4 Page 13								
		For detailed overload relay specifications by catalog number prefix, see Section 6 Page 8								
Rated Operating Voltage, Ue	VAC	600								
Standard Short Circuit Current Current @ 600V AC	kA	5						10		
Maximum Fuse Size varies by current adjustment range of overload relay	A	30	30	60	60	60	60	100	125	150
High Fault Short Circuit Current @ 600V AC	kA	100								
Maximum Fuse Size (Class J) – varies by current adjustment range of overload relay	A	25	25	40	40	50	60	90	100	125
ELECTRICAL IEC APPLICATIONS										
		For detailed contactor specifications by starter rating code, see Section 4 Page 13								
		For detailed overload relay specifications by catalog number prefix, see Section 6 Page 8								
Rated Insulation Voltage, Ui	V	1,000								
Rated Impulse Voltage, Uimp	kV	6						8		
Rated Operating Voltage, Ue	VAC	690								
COIL CHARACTERISTICS										
		For detailed contactor specifications by starter rating code, see Section 4 Page 14								
Rated Insulation Voltage, Ui	V	1,000								
Operating Limits		80 ~ 110% of Rated Coil Voltage								
MECHANICAL										
		For detailed contactor specifications by starter rating code, see Section 4 Page 15								
ENVIRONMENTAL										
		For detailed contactor specifications by starter rating code, see Section 4 Page 15								
		For detailed overload relay specifications by catalog number prefix, see Section 6 Page 8								
Ambient Operating Temperature	°C / °F	-25 to +55 / -13 to +131								
Ambient Storage Temperature	°C / °F	-40 to +70 / -104 to +158								
Altitude	m / ft.	2,000 / 6,528								
Environmental Protection Ratings										
Main Terminals (with conductors connected)		IP20								
Coil Terminals		IP20								
Auxiliary Contact Terminals		IP20								
Enclosure										
Codes: F, G		Type 1, 4/4X and IP66								
Pilot Devices		Type 1, 2, 3, 3R, 4/4X, 12, 13 and IP65								
CONSTRUCTION - GENERAL										
		For detailed contactor specifications by starter rating code, see Section 4 Page 15								
		For detailed overload relay specifications by catalog number prefix, see Section 6 Page 9								
Number of Poles		3								
Pollution Degree		3								
Trip Class		10								
MATERIALS										
Pilot Devices		For detailed 22mm IEC pilot device specifications, see Section 15 Page 48								
Enclosure		Polycarbonate								
ROHS COMPLIANCE		For RoHS compliance documentation by product, refer to www.c3controls.com								

ENCLOSED DOL STARTER ASSEMBLIES: ENCLOSURE TYPE "F" - DIMENSION REF. 1

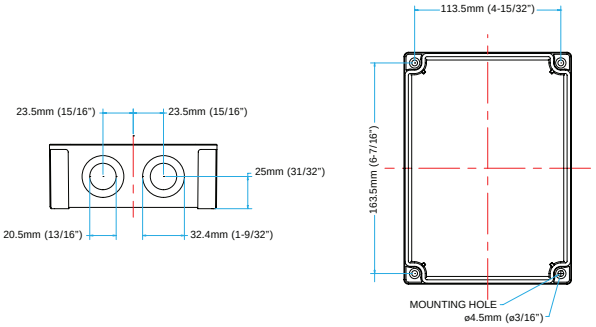

(shown with Contactor, Overload Relay, Reset Push Button and Dual Push Button)

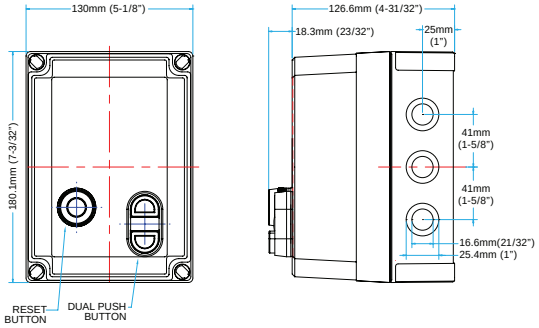

(shown with Contactor, Overload Relay, Reset Push Button, Pilot Light and 2 Push Buttons)

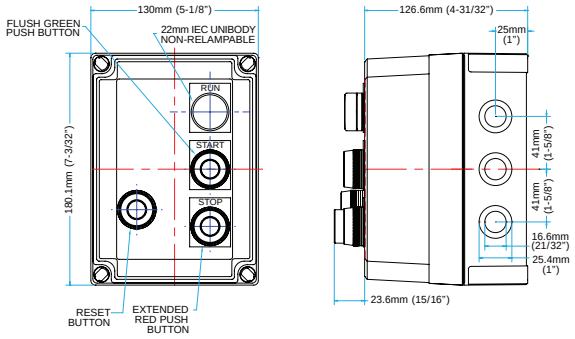

(shown with Contactor, Overload Relay, Reset Push Button, Pilot Light and Selector Switch)

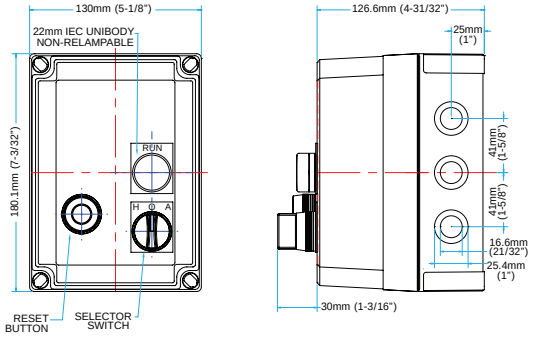

ENCLOSED DOL STARTER ASSEMBLIES: ENCLOSURE TYPE "G" - DIMENSION REF. 2

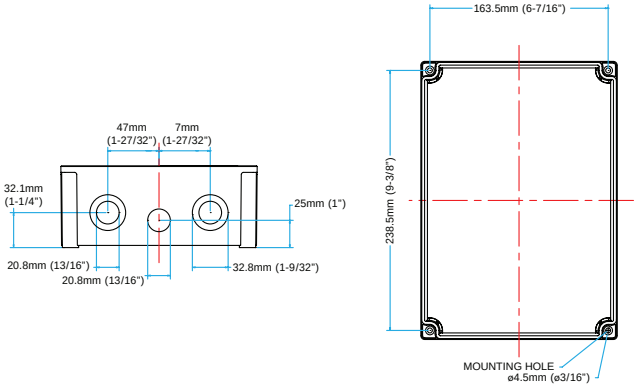

(shown with Contactor, Overload Relay, Reset Push Button, Pilot Light and 2 Push Buttons)

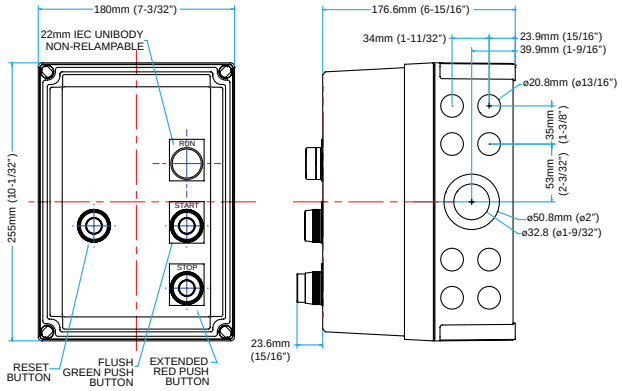

(shown with Contactor, Overload Relay, Reset Push Button, Pilot Light and Selector Switch)

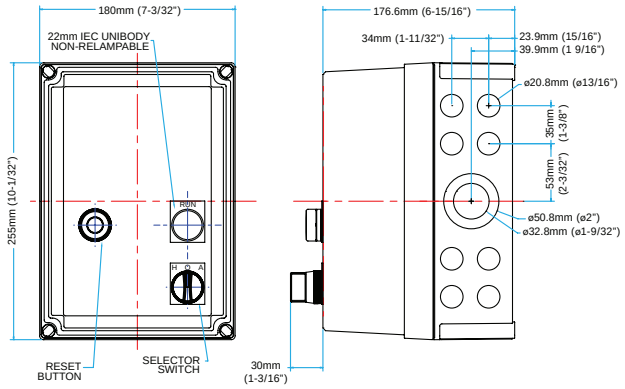

NOTE: All dimensions are approximations, actual size may vary slightly. Visit www.c3controls.com to download CAD drawings.

MOTOR PROTECTION CIRCUIT BREAKERS

series 330

c3controls' Series 330 Motor Protection Circuit Breakers provide reliable overload and short circuit protection for all your motor control applications. Our motor protection circuit breakers are ideal for use in multi-motor applications – providing space savings, labor savings, and cost savings. They install on a standard 35mm DIN rail, and they work with a variety of accessories to make wiring as easy as possible.

Section 9

Motor Protection Circuit Breakers with Thermal and Magnetic Trip Elements	6
Motor Protection Circuit Breakers with Magnetic Trip Elements	7
External Operating Handle	10
Accessories	11
Specifications	14
Circuit Diagrams	19
Trip Characteristics	20
Dimensions	21

PROVEN

Conformity to Standards:
UL 508, 60947-4-1
CSA C22.2 No. 14
IEC 60947-1, 60947-4-1

Certifications:
UL File #: E187641 (Guide NLRV, NLRV7), E312106 (Guide NKJH, NKJH7)

CE Marked (per EU Low Voltage Directive 2006/95/EC and RoHS Directive 2011/65/EU)

Visit www.c3controls.com to download product certifications.

NOTE: The scope (range, description, price, specifications, dimensions, etc.) of the product featured in this section is subject to change without notice. Refer to www.c3controls.com for product updates.

REVISION 06.2022

MOTOR PROTECTION CIRCUIT BREAKERS

c3controls offers a comprehensive line of Motor Control products designed and manufactured to meet the needs of the machine builder. We promise durable products at a price that gives you an edge, and we guarantee same-day shipping. Check out all the features of our Series 330 Motor Protection Circuit Breakers below!

DELIVERING SUPERIOR PRODUCT QUALITY AND MANUFACTURING EXCELLENCE

✓ **Proven**	Our Series 330 Motor Protection Circuit Breakers are UL Listed and CE marked meeting global standards requirements.
✓ **Self-Protected**	Our self-protected devices eliminate the need for upstream fuses and circuit breakers, and they provide reliable motor protection.
✓ **Compact**	Only 45mm (1-49/64") wide up to 20HP @ 460V (15kW @ 400V) in both thermal and magnetic and magnetic only versions.
✓ **Wide Variety of Accessories**	Including standard auxiliary contacts, trip indicating auxiliary contacts, shunt and undervoltage release modules, and many wiring accessories such as commoning links and feeder terminals for easy distribution of power to multiple motor protection circuit breakers.
✓ **Modular Design**	Modular design allows Series 330 Motor Protection Circuit Breakers to be easily used with the complete range of Series 300 Contactors and accessories.
✓ **Easy to Install**	35mm DIN rail mounting for fast and easy installation and removal, or panel mounting with mounting feet for more secure installation in high shock and vibration applications.
✓ **Visible Markings**	High visibility labels and markings; dual IEC and NEMA terminal markings for ease of wiring anywhere in the world.
✓ **Space Savings**	Control panel sizes can be reduced because the short circuit protection provided by the Series 330 enables individual motor branch circuit fuses or circuit breakers and overload relays to be eliminated.
✓ **Added Safety**	IP20 guarded terminals with dual terminal markings prevent accidental contact with live parts.
✓ **36-Month Warranty***	Every product is backed by our 36-Month Warranty—giving you confidence in the quality, reliability, and performance of components designed for the most demanding applications.
✓ **Guaranteed Same-Day Shipping***	Product availability reduces inventory, and improves cash-flow—saving you money. With c3controls any order for standard catalog items received by 6:00pm ET is guaranteed to ship same-day.
✓ **Advantage Pricing**	Our approach to product development, manufacturing, and focus on servicing the OEM and Electrical Equipment Builder reduces cost. The result—the best value in the industry.

*See c3controls Terms & Conditions

> *"We began to think we weren't going to find a vendor who could provide us with Motor Protection Circuit Breakers at a price that made replacing fuses affordable. And then we found c3controls."*

Joe O'Leary, Chief Engineer • **Aztec Machinery Company**

MPCB w/Thermal & Magnetic Trip Elements

MPCB w/Magnetic Trip Elements

Type E MPCB

UNIQUE PRODUCT LINE FEATURES

MULTI-FUNCTION DEVICE

ARTICLE 430 PART VII - NFPA 70

	To Supply	NEC Part
Motor disconnecting means		Part IX
Motor branch-circuit, short circuit, and ground-fault protection		Part IV
Motor circuit conductor		Part II
Motor controller		Part VII
Motor control circuits		Part VI
Motor overload protection		Part III
Motor		Part I

Our Series 330 MPCBs are certified as Manual Motor Controllers Suitable as Motor Disconnects, can be used in Group Motor Installations, and can be used to manually control individual motors and protect them against overload and short circuit currents.

SELF-PROTECTED

Listed as a UL 60947-4-1 Type E self-protected combination Manual Motor Controller for circuits capable of delivering up to 50kA @ 460V.

HIGH FAULT SCCR

High fault short circuit current rating of 50kA @ 480V provides safety and reliability in high fault applications.

SEAMLESS COMPATIBILITY

The modular design of our Series 330 MPCB allows for direct mounting onto Series 310 (9A to 40A) AC/DC Contactors and Series 300 and 310 AC/DC Miniature Contactors.

ADJUSTABLE CURRENT SETTING

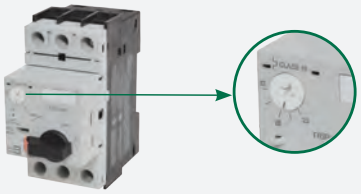

Full load current adjustment ratio enables overload relay to be set to exact FLA of motor. Provides phase protection for the motor against overload currents.

SNAP-ON ACCESSORIES

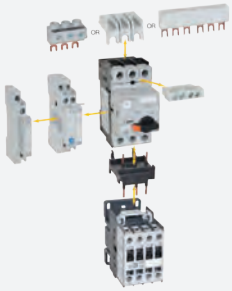

Snap-on accessories are easily installed without the use of tools, lowering assembly and installation costs.

FIND IT FAST

Motor Protection Circuit Breakers

- Certifications
- Specifications
- Dimension Drawings
- Installation Instructions
- Easy to Buy

www.c3controls.com

Motor Control Device Solutions

c3controls motor control devices are the perfect solution for manufacturers who want proper motor control and superior motor protection without having to overpay or compromise on quality. In fact, we engineer so much performance and flexibility into our products, we can deliver a remarkably better value than our competitors.

c3controls products deliver like no other.

Seamless Compatibility

Contactors, overload relays and motor protection circuit breakers are designed by c3controls to work together, with common connections and accessories, resulting in a high functioning compact starter.

LEADING THE INDUSTRY
with our compact miniature 10HP contactors and control relays. One frame size (AC or DC)—28% reduction in panel area.

Compact

The small size of c3controls motor control devices, plus features like common accessories, enable assembly into smaller control panels for lower installed costs.

Reliable Protection

Contactors provide the repeated on/off switching for the motor and are designed for motor, actuator, solenoid, and other power switching applications. Overload relays provide Trip Class 10 protection against overload and phase-loss conditions, and have ambient temperature compensation for motor protection in high temperature environments.

Ensures the protection of equipment and user.

Motor protection circuit breakers provide overload, phase-loss and short circuit protection, can be used by themselves as manual motor controllers or with contactors in group motor installations, and can achieve Type 2 coordination for optimum performance.

Type E self-protected combination manual motor controllers provide disconnecting means, branch circuit protection, motor control and motor overload protection all in a single device.

Proven

Our motor control devices are UL Listed and CE marked, meeting global standards requirements for use anywhere in the world.

NFPA 70 - National Electrical Code (NEC)

Understanding what functions are needed in your motor control circuit is critical when selecting motor control devices. Engineers benefit from the standards and codes established to ensure safety and protection to personnel and equipment.

More than just knowing the standards, c3controls, as a manufacturer of motor control products, has the application expertise you need to select the right products.

c3controls & Article 430 - Motors, Motor Circuits and Controllers

	To Supply	NEC Part	c3controls Product Series		
Motor disconnecting means		Part IX	330	630	Type E: 330 630
Motor branch-circuit, short circuit, and ground-fault protection		Part IV			Type E: 330 630
Motor circuit conductor		Part II			
Motor controller		Part VII	300/310 330	620 630	Type E: 330 630
Motor control circuits		Part VI			
Motor overload protection		Part III	320 330	620 630	Type E: 330 630
Motor		Part I			

Our motor control products align with Article 430 Part VII, Motor Controller, of the NFPA 70, the National Electrical Code.

IT'S EASY TO BUILD YOUR OWN CIRCUIT BREAKER

Simply pick the code number from each of the sections below and combine them to build your part number.

Motor Protection Circuit Breakers with Thermal and Magnetic Trip Elements

330-T25S _____
/ //

Example: To build one of our most popular Circuit Breakers, the part number would be **330-T25S + II** or **330-T25S2U32**

I. MOTOR PROTECTION CIRCUIT BREAKER TYPE

CODE	DESCRIPTION
330-T25S	32A Motor Protection Circuit Breaker with Thermal and Magnetic Trip Elements

Provides overload and short circuit protection.

DISCOUNT SCHEDULE **F**

II. CURRENT AND POWER RATINGS

CODE	RATED OPER. CURRENT (A)	ADJUSTMENT RANGE (A)	MAGNETIC TRIP CURRENT (A)	ULTIMATE INTERRUPTING CURRENT (Icu) (kA)		RATINGS FOR SWITCHING AC MOTORS*								LIST
						3 PHASE kW (50Hz)				3 PHASE HP (60Hz)				
				400V	480V	230V	400/415V	500V	690V	200V	230V	460V	575V	
2C16	0.16	0.10 ~ 0.16	2.1	100	100	—	—	—	0.06	—	—	—	—	$122.00
2C25	0.25	0.16 ~ 0.25	3.3	100	100	—	0.06	0.06	0.12	—	—	—	—	$122.00
2C40	0.40	0.25 ~ 0.40	5.2	100	100	—	0.09	0.12	0.18	—	—	—	—	$132.00
2C63	0.63	0.40 ~ 0.63	8.2	100	100	0.06	0.12	0.25	0.25	—	—	—	1/4	$136.00
2D10	1.0	0.63 ~ 1.0	13	100	100	0.12	0.25	0.37	0.55	—	—	1/2	1/2	$139.00
2D16	1.6	1.0 ~ 1.6	21	100	100	0.18	0.55	0.75	1.1	1/4	1/3	3/4	1	$139.00
2D25	2.5	1.6 ~ 2.5	33	100	100	0.37	0.75	1.1	1.5	1/2	1/2	1-1/2	1-1/2	$139.00
2D40	4.0	2.5 ~ 4.0	52	100	100	0.75	1.5	2.2	3	3/4	1	2	3	$139.00
2D63	6.3	4.0 ~ 6.3	82	100	100	1.1	2.2	3	4	1-1/2	1-1/2	3	5	$148.00
2U10	10	6.3 ~ 10	130	100	42	2.2	4	4	7.5	3	3	7-1/2	10	$154.00
2U16	16	10 ~ 16	208	50	10	3.7	7.5	9	12.5	5	5	10	15	$170.00
2U20	20	16 ~ 20	260	50	10	3.7	9	12.5	15	5	7-1/2	15	20	$185.00
2U25	25	20 ~ 25	325	50	10	5.5	12.5	15	22	7-1/2	7-1/2	15	20	$218.00
2U32	32	25 ~ 32	416	50	10	7.5	15	18.5	30	10	10	20	25	$218.00

*NOTE: HP and kW ratings shown in the table above are for reference. The final selection of the motor protection circuit breaker must be based on the actual motor full load current.

Some of Our Popular Configurations:

MOTOR PROTECTION CIRCUIT BREAKERS WITH THERMAL AND MAGNETIC TRIP ELEMENTS

CATALOG NUMBER	DESCRIPTION	LIST
330-T25S2D63	6.3A Motor Protection Circuit Breaker with Thermal and Magnetic Trip Elements	$148.00
330-T25S2U10	10A Motor Protection Circuit Breaker with Thermal and Magnetic Trip Elements	$154.00
330-T25S2U16	16A Motor Protection Circuit Breaker with Thermal and Magnetic Trip Elements	$170.00
330-T25S2U20	20A Motor Protection Circuit Breaker with Thermal and Magnetic Trip Elements	$185.00

IT'S EASY TO BUILD YOUR OWN CIRCUIT BREAKER

Simply pick the code number from each of the sections below and combine them to build your part number.

Motor Protection Circuit Breakers with Magnetic Trip Element

330-M25S _____
/ II

Example: To build one of our most popular Circuit Breakers, the part number would be **330-M25S + II** or **330-M25S2D16**

DISCOUNT SCHEDULE **F**

I. MOTOR PROTECTION CIRCUIT BREAKER TYPE

CODE	DESCRIPTION
330-M25S	32A Motor Protection Circuit Breaker with Magnetic Trip Element

Provides short circuit protection.

II. CURRENT AND POWER RATINGS

CODE	RATED OPERATING CURRENT (A)	MAGNETIC TRIP CURRENT (A)	ULTIMATE INTERRUPTING CURRENT (Icu) (kA)		RATINGS FOR SWITCHING AC MOTORS*								LIST
					3 PHASE kW (50Hz)				3 PHASE HP (60Hz)				
			400V	480V	230V	400/415V	500V	690V	200V	230V	460V	575V	
2C16	0.16	2.1	100	100	—	—	—	0.06	—	—	—	—	$122.00
2C25	0.25	3.3	100	100	—	0.06	0.06	0.12	—	—	—	—	$122.00
2C40	0.40	5.2	100	100	—	0.09	0.12	0.18	—	—	—	—	$132.00
2C63	0.63	8.2	100	100	0.06	0.12	0.25	0.25	—	—	—	1/4	$136.00
2D10	1.0	13	100	100	0.12	0.25	0.37	0.55	—	—	1/2	1/2	$139.00
2D16	1.6	21	100	100	0.18	0.55	0.75	1.1	1/4	1/3	3/4	1	$139.00
2D25	2.5	33	100	100	0.37	0.75	1.1	1.5	1/2	1/2	1-1/2	1-1/2	$139.00
2D40	4.0	52	100	100	0.75	1.5	2.2	3	3/4	1	2	3	$139.00
2D63	6.3	82	100	100	1.1	2.2	3	4	1-1/2	1-1/2	3	5	$148.00
2U10	10	130	100	42	2.2	4	4	7.5	3	3	7-1/2	10	$154.00
2U16	16	208	50	10	3.7	7.5	9	12.5	5	5	10	15	$170.00
2U20	20	260	50	10	3.7	9	12.5	15	5	7-1/2	15	20	$185.00
2U25	25	325	50	10	5.5	12.5	15	22	7-1/2	7-1/2	15	20	$218.00
2U32	32	416	50	10	7.5	15	18.5	30	10	10	20	25	$218.00

*NOTE: HP and kW ratings shown in the table above are for reference. The final selection of the motor protection circuit breaker must be based on the actual motor full load current.

Some of Our Popular Configurations:

MOTOR PROTECTION CIRCUIT BREAKERS WITH MAGNETIC TRIP ELEMENT

CATALOG NUMBER	DESCRIPTION	LIST
330-M25S2D63	6.3A Motor Protection Circuit Breaker with Magnetic Trip Element	$148.00
330-M25S2U10	10A Motor Protection Circuit Breaker with Magnetic Trip Element	$154.00
330-M25S2U16	16A Motor Protection Circuit Breaker with Magnetic Trip Element	$170.00
330-M25S2U20	20A Motor Protection Circuit Breaker with Magnetic Trip Element	$185.00

Motor Protection Circuit Breakers

c3controls Series 330-T25S Motor Protection Circuit Breakers include both thermal and magnetic trip elements for overload and short circuit protection. They are ideal for use with Series 300 Contactors in group motor installations where panel space is at a premium and device modularity is required to satisfy virtually any application requirement. For the simplest applications, they can also be used by themselves as manual motor controllers. cULus and CE Markings make them suitable for use anywhere in the world. Small size, IP20 guarded terminals with dual terminal markings, and shared accessories will help reduce your total installed costs and enhance the features and performance of your equipment. Just look and see what the Series 330-T25S and 330-M25S have to offer.

Product features include:

- Series 330 Motor Protection Circuit Breakers direct mount onto:
  - Series 300 Non-Reversing and Series 310 Reversing, 9A to 40A AC and DC, Contactors
  - Series 300-M Miniature Non-Reversing and Series 310-M Miniature Reversing AC and DC Contactors
- Line side terminal barrier accessory snaps-on and installs without the use of tools.
- Removable and replaceable identification marker, standard on all c3controls Series 330 Motor Protection Circuit Breakers, simplifies troubleshooting in panels with many devices.
- High fault short circuit current rating of 50kA @ 480V provides safety and reliability in high fault applications.
- Certified as Manual Motor Controllers Suitable as Motor Disconnects for use in group motor installations in accordance with the NEC (National Electrical Code).
- Two versions available – with thermal and magnetic trip elements which provide overload (Trip Class 10) and short circuit protection, and magnetic trip element only for short circuit protection. Use the magnetic trip element only version with Series 320 Overload Relays for overload protection and the other outstanding features of the Series 320.
- Single phase sensitivity to protect motors against damaging phase loss conditions.
- Designed for optimum performance with Series 300-S09 to 300-S40 Contactors in group motor installations, and can achieve Type 2 coordination in circuits capable of delivering up to 50kA at 460V.
- Meets IEC 60947 requirements for starters and circuit breakers and provides isolation functionality.
- Modular design accommodates a wide variety of accessories, some of which snap-on without tools, lowering assembly and installation costs.
- 18mm wide trip indicating auxiliary contacts can be used to identify the trip cause – overload (1 NO and 1 NC) or short circuit (1 NO and 1 NC), to help determine the type of service/maintenance that may be required.
- Compact size – only 45mm (1-49/64") wide up to 20HP @ 460V (15kW @ 400V) to minimize the amount of panel area required.
- The "ON/OFF" manual operator enables individual motor circuits to be easily isolated without having to disconnect all of the circuits in a control panel.
- Operators can be padlocked in the "OFF" position (max. one 4.9mm [3/16"] padlock) preventing the motor protection circuit breaker from being turned "ON" when the equipment is being serviced.
- Visible trip indication for fast identification of which device tripped in a control panel where multiple motor protection circuit breakers are installed.
- IP20 guarded terminals with dual terminal markings prevent accidental contact with live parts.
- Combination head terminal screws allow the use of "straight", "phillips", or "posidrive" screwdrivers for fast and reliable wiring.
- Universal ratings and markings: A, kW, and HP ratings as well as applicable 3rd party certification markings.
- Test function to verify the performance of the device and the proper operation of the control circuit and accessories.

Motor Protection Circuit Breakers

While our Series 330 Motor Protection Circuit Breakers are certified as Manual Motor Controllers Suitable as Motor Disconnects, and can be used to manually control individual motors and protect them against overload and short circuit currents, the greatest benefits can be realized by using the Series 330 Motor Protection Circuit Breakers in conjunction with Series 300 Contactors and Series 330 wiring accessories in Group Motor Installations.

UNIQUE PRODUCT FEATURES

Space Savings

Control panel sizes can be reduced because the short circuit protection provided by the Series 330 Motor Protection Circuit Breaker enables individual motor branch circuit fuses or circuit breakers and overload relays to be eliminated.

Labor Savings

Starter assembly and installation of the starter assemblies in Group Motor Installations is easier and faster with the use of connection modules between the contactor and motor protection circuit breaker and commoning links to conveniently distribute power to multiple starter assemblies. In addition to labor savings, the components look nice too, and provide IP20 protection to guard against accidental contact with live parts.

Cost Savings

Smaller size enclosures, reduced wiring, and DIN rail installation all combine to provide a lower cost control panel with superior performance in normal operating conditions as well as in overload or short circuit conditions.

Discover Type E

Listed as a UL 60947-4-1 Self-protected Combination Manual Motor Controller when accessories trip indicating auxiliary contact (330-STA22S25) and line side terminal barrier (330-LSTBS25) are assembled for circuits capable of delivering up to 50kA @ 460V. For field assembly only.

Type E devices provide motor disconnect means, branch short circuit and ground fault protection, motor control and motor overload protection, reducing panel size and eliminating upstream fuses or circuit breakers for a motor circuit.

We also offer fully assembled Type E and Type F Direct-On-Line (DOL) Starters, refer to Section 11 Pages 10-17. For Enclosed Type E and Type F assemblies refer to Section 12 Pages 10-17.

IT'S EASY TO BUILD YOUR OWN OPERATING HANDLE

Simply pick the code number from each of the sections below and combine them to build your part number.

Motor Protection Circuit Breaker External Operating Handle

330 - S2 PHG _____ _____
I II III IV V

Example: To build one of our most popular External Operating Handles, the part number would be **330 + S2 + PHG + IV + V** or **330-S2PHGRY06**

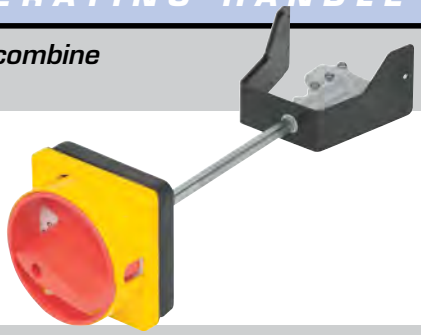

I. OPERATING HANDLE INSTALLATION

CODE	DESCRIPTION	LIST
330	External Operating Handle	$45.00

II. MOTOR PROTECTION CIRCUIT BREAKER FRAME SIZE

CODE	DESCRIPTION
S2	32 Ampere

III. OPERATING HANDLE TYPE

CODE	DESCRIPTION	LIST
PHG	Round (Type 1, 2, 3, 3R, 4/4X, 12, 13 and IP65)	$15.00

Each operating handle includes a support bracket and coupling to ensure alignment with the motor protection circuit breaker even in deep enclosures.

IV. OPERATING HANDLE COLOR

CODE	OPERATOR COLOR	BEZEL COLOR
RY	Red	Yellow
BG	Black	Grey

V. OPERATING SHAFT LENGTH

CODE	DESCRIPTION	LIST
06	150mm (5-57/64")	$ 6.30
12	300mm (11-13/16")	$12.60

DISCOUNT SCHEDULE **F**

UNIQUE PRODUCT FEATURES

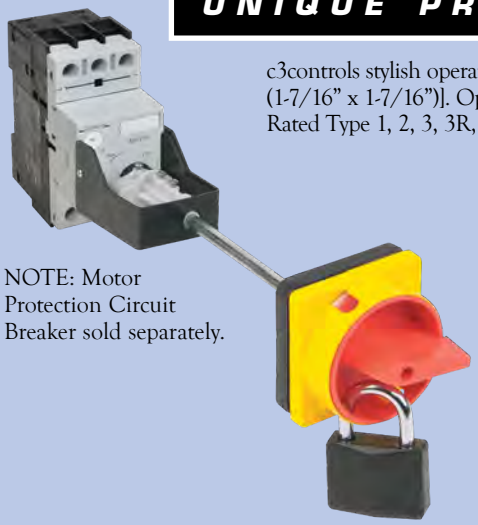

NOTE: Motor Protection Circuit Breaker sold separately.

c3controls stylish operating handles are easy to install in standard 4-hole panel drilling layouts [36mm x 36mm (1-7/16" x 1-7/16")]. Operating handles can be installed in enclosures with door thicknesses up to 4mm (5/32"). Rated Type 1, 2, 3, 3R, 4/4X, 12, 13 and IP65 for the most demanding industrial environments.

1. Provide reliable actuation of Series 330 Motor Protection Circuit Breakers and Series 630 Direct-On-Line (DOL) Starters from the outside of the enclosure and can be locked OFF for extra safety. Refer to Section 9 Pages 6 & 7 for our complete selection of Series 330 Motor Protection Circuit Breakers and Section 11 Pages 6 & 7 for Series 630 Direct-On-Line (DOL) Starters.
2. Handles can be padlocked OFF with up to three padlocks.
3. Operating handles with ON/OFF and I/O markings.
4. Door interlock – can only be opened in the OFF position.
5. Positive, reliable actuation of our Series 330 Motor Protection Circuit Breaker is ensured through the rigid steel operating shaft that can be cut to length to fit in enclosures up to 421mm (16-37/64") deep.

Mix and Match Any Color

64mm x 64mm
(2-17/32" x 2-17/32")

Some of Our Popular Configurations:

MOTOR PROTECTION CIRCUIT BREAKER EXTERNAL OPERATING HANDLE

CATALOG NUMBER	OPERATING HANDLE TYPE	OPERATING HANDLE COLOR	LIST
330-S2PHGRY06	Round	Red/Yellow	$66.30
330-S2PHGRY12	Round	Red/Yellow	$72.60

FRONT MOUNTED AUXILIARY CONTACTS

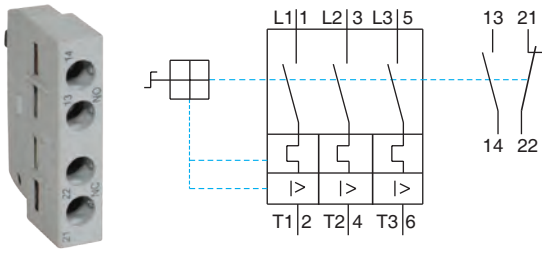

Our front mounted auxiliary contacts do not add depth to the motor protection circuit breaker and installs within its foot print – no extra panel area is required. IP20 guarded terminals protect against accidental contact with live parts. These contacts snap-on and install without the use of tools.

CODE	CONTACT CONFIGURATION	LIST
330-FA11S25	1 Normally Open and 1 Normally Closed	$21.00

MOTOR PROTECTION CIRCUIT BREAKER ENCLOSURES

Our Motor Protection Circuit Breaker Enclosure accessory is a custom fit enclosure design specifically for use with our Series 330 Motor Protection Circuit Breaker providing reliable operation and superior performance. CE certified with an IP55 environmental rating.

Available in two frame sizes: Frame Size 1– 55mm internal mounting width allows the assembly of a side mounted auxiliary contact, and Frame Size 2 – 65mm internal mounting width allows the assembly of a shunt release module or undervoltage module.

The enclosure has integrated ground and neutral connections, and four (4) standard PG16 knock outs (2 on the top and 2 on the bottom).

The operating handle, which is available in two colors, can be padlocked in the "OFF" position with up to three padlocks for extra safety and the security necessary during maintenance activities.

FRAME SIZE 1 (55MM INTERNAL MOUNTING WIDTH)		
CODE	**DESCRIPTION**	**LIST**
330-BABS1RY	Motor Protection Circuit Breaker Enclosure with ABS Plastic and Red/Yellow Handle	$63.00
330-BABS1BG	Motor Protection Circuit Breaker Enclosure with ABS Plastic and Black/Grey Handle	$63.00
FRAME SIZE 2 (65MM INTERNAL MOUNTING WIDTH)		
330-BABS2RY	Motor Protection Circuit Breaker Enclosure with ABS Plastic and Red/Yellow Handle	$78.00
330-BABS2BG	Motor Protection Circuit Breaker Enclosure with ABS Plastic and Black/Grey Handle	$78.00

SIDE MOUNTED AUXILIARY CONTACTS

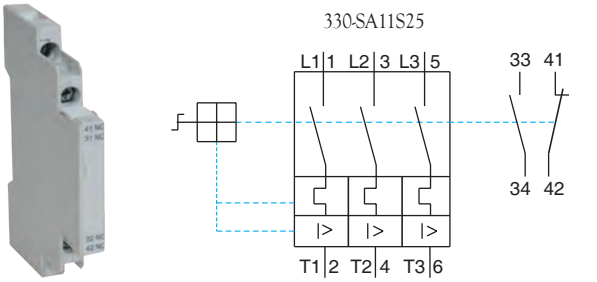

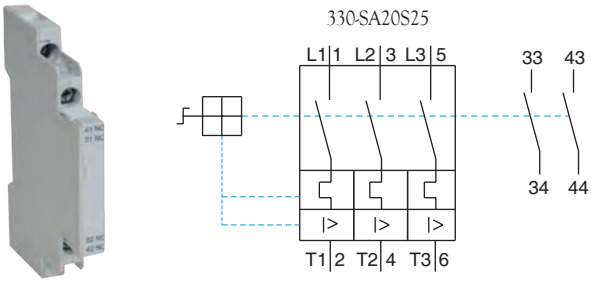

Our side mounted auxiliary contacts feature IP20 guarded terminals to protect against accidental contact with live parts. These contacts snap-on to the left side of the motor protection circuit breaker and install without the use of tools.

CODE	CONTACT CONFIGURATION	LIST
330-SA11S25	1 Normally Open and 1 Normally Closed	$21.00
330-SA20S25	2 Normally Open	$21.00

MOUNTING FOOT KIT

The mounting foot kit enables motor protection circuit breakers to be panel mounted instead of installed on a 35mm DIN rail.

CODE	DESCRIPTION	LIST/PC.
330-MF1	Mounting Foot Kit (2 per pkg.)	$ 1.50

DISCOUNT SCHEDULE F

SHUNT RELEASE MODULES

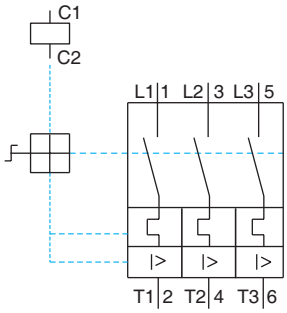

The shunt release module enables the motor protection circuit breaker to be turned "OFF" from a remote location. Snaps-on and installs on the right side of the motor protection circuit breaker without the use of tools. IP20 guarded terminals to protect against accidental contact with live parts. Wide range of 50/60Hz operating voltages. Can be used in conjunction with front mounted and side mounted auxiliary contacts.

CODE	VOLTAGE RANGE	LIST
330-SR25XC	20 ~ 24V 50/60Hz	$50.00
330-SR25XJ	40 ~ 48V 50/60Hz	$50.00
330-SR25XAH	100 ~ 127V 50/60Hz	$50.00
330-SR25XF	200 ~ 240V 50/60Hz	$50.00
330-SR25XQ	365 ~ 440V 50/60Hz	$50.00

TRIP INDICATING AUXILIARY CONTACTS

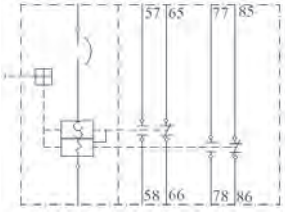

The trip indicating auxiliary contact module includes Overload Contacts and Short Circuit Contacts. When an overload trip occurs the Overload Contacts change state. When a short circuit trip occurs, the Overload Contacts and Short Circuit Contacts change state. In addition to the electrical contacts, the trip indicating auxiliary contact module includes a mechanical trip indication – the blue button protrudes from the module after a short circuit trip. The trip indicating contact module can be field installed without the use of tools on Series 330-T25S and 330-M25S Motor Protection Circuit Breakers and can be used in conjunction with standard front mounted (330-FA) and side mounted (330-SA) auxiliary contacts. NOTE: The Trip Indicating Auxiliary Contact and the Line Side Terminal Barrier are required to achieve Type E construction with a Series 330-T25S device.

CODE	DESCRIPTION	LIST
330-STA22S25	18mm Wide - Left Side Mounted Trip Indicating Auxiliary Contact (1 NO and 1 NC overload and 1 NO and 1 NC short circuit)	$57.00

UNDERVOLTAGE RELEASE MODULES

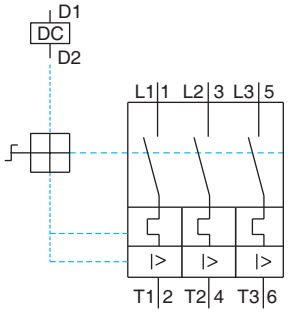

The undervoltage release module automatically trips the motor protection circuit breaker when the supply voltage is less than 70 - 35% of the rated voltage of the undervoltage release module. Undervoltage release modules are ideal to ensure motors do not automatically restart after a power outage when the motor protection circuit breaker is being used by itself as a manual motor controller. Snaps-on and installs on the right side of the motor protection circuit breaker without the use of tools. IP20 guarded terminals to protect against accidental contact with live parts. Wide range of 50/60Hz operating voltages. Can be used in conjunction with front mounted and side mounted auxiliary contacts.

CODE	VOLTAGE RANGE	LIST
330-UR25C	20V 50Hz / 24V 60Hz	$50.00
330-UR25XC	24V 50/60Hz	$50.00
330-UR25H	24V 50Hz / 28V 60Hz	$50.00
330-UR25AG	95V 50Hz / 110V 60Hz	$50.00
330-UR25D	110V 50Hz / 120V 60Hz	$50.00
330-UR25AH	110 ~ 115V 50Hz / 127V 60Hz	$50.00
330-UR25L	180V 50Hz / 208V 60Hz	$50.00
330-UR25AJ	190V 50Hz / 220V 60Hz	$50.00
330-UR25F	208V 50Hz / 240V 60Hz	$50.00
330-UR25P	230 ~ 240V 50Hz / 277V 60Hz	$50.00
330-UR25AL	325V 50Hz / 380V 60Hz	$50.00
330-UR25Q	380V 50Hz / 440V 60Hz	$50.00
330-UR25R	400 ~ 415V 50Hz / 480V 60Hz	$50.00
330-UR25T	500V 50Hz / 600V 60Hz	$50.00

LINE SIDE TERMINAL BARRIER

The line side terminal barrier provides increased electrical clearances to comply with the UL 60947-4-1 Self-Protected Combination Motor Controller (Type E) requirements. The terminal barrier can be field installed on Series 330-T25S and 330-M25S Motor Protection Circuit Breakers. NOTE: The Line Side Terminal Barrier and the Trip Indicating Auxiliary Contact are required to achieve Type E construction with a Series 330-T25S device.

CODE	DESCRIPTION	LIST
330-LSTBS25	Line Side Terminal Barrier	$30.75

DISCOUNT SCHEDULE F

COMMONING LINKS

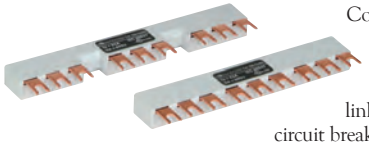

Commoning links provide a convenient means of distributing 3-phase power to a group of motor protection circuits. 45mm spacing commoning links are for use with motor protection circuit breakers without auxiliary contact modules or with a front mounted auxiliary contact module (330-FA11S25). 54mm spacing commoning links are for use with motor protection circuit breakers with a side mounted auxiliary contact module (330-SA11S25 or 330-SA20S25). IP20 construction to guard against accidental contact with live parts. Used in conjunction with 330-FT1S2 Feeder Module.

CODE	FOR USE WITH	CONTINUOUS CURRENT RATING	LENGTH	LIST
	45MM SPACING			
330-CL452S2	2 Motor Protection Circuit Breakers	63A	91mm	$34.00
330-CL453S2	3 Motor Protection Circuit Breakers	63A	136mm	$40.00
330-CL454S2	4 Motor Protection Circuit Breakers	63A	181mm	$45.00
330-CL455S2	5 Motor Protection Circuit Breakers	63A	226mm	$48.00
	54MM SPACING			
330-CL542S2	2 Motor Protection Circuit Breakers	63A	100mm	$35.00
330-CL543S2	3 Motor Protection Circuit Breakers	63A	154mm	$41.00
330-CL544S2	4 Motor Protection Circuit Breakers	63A	208mm	$48.00
330-CL545S2	5 Motor Protection Circuit Breakers	63A	262mm	$51.00

FEEDER TERMINAL FOR COMMONING LINK TERMINALS

The feeder terminal accepts the main branch circuit conductors and distributes power to the 330-CL Commoning Links. The feeder terminal overlaps the commoning link when installed. IP20 guarded terminals to protect against accidental contact with live parts. Continuous current rating: 63A.

CODE	DESCRIPTION	LIST
330-FT1S2	Feeder Terminal	$39.00

ADJUSTMENT SCALE COVER

The adjustment scale cover prevents inadvertent or unauthorized adjustment of the full load current dial setting of the motor protection circuit breaker.

CODE	DESCRIPTION	LIST/PC.
330-SCS2	Adjustment Scale Cover (5 per pkg.)	$ 5.50

SHROUD FOR UNUSED COMMONING LINK TERMINALS

The highly visible yellow terminal shroud with the hazard symbol is for covering unused terminals of the 330-CL commoning links. Use of the shroud insulates the unused terminals and enables the easy installation of additional motor protection circuit breakers in the future.

CODE	DESCRIPTION	LIST
330-CLSS2	Shroud	$11.00

CIRCUIT BREAKER – CONTACTOR LINK MODULE

The circuit breaker – contactor link module provides a mechanical and electrical linkage between a motor protection circuit breaker and a Series 300 Contactor. The circuit breaker – contactor link module makes starter assembly easy and enables the starter assembly to be installed on a single or two 35mm DIN rails.

CODE	FOR USE WITH	LIST
330-CMS216	Series 300-M07 to 300-M16 AC or DC Operated Contactors	$26.00
330-CMS225A	Series 300-S09 to 300-S25 AC Operated Contactors	$26.00
330-CMS225D	Series 300-S09 to 300-S25 DC Operated Contactors	$26.00
330-CMS240A	Series 300-S32 to 300-S40 AC Operated Contactors	$26.00
330-CMS240D	Series 300-S32 to 300-S40 DC Operated Contactors	$26.00

DISCOUNT SCHEDULE F

Specifications:

ELECTRICAL SPECIFICATIONS															
		CAT. NO. 330-T25S**** AND 330-M25S****													
		2C16	2C25	2C40	2C63	2D10	2D16	2D25	2D40	2D63	2U10	2U16	2U20	2U25	2U32
ELECTRICAL GENERAL															
	UNITS														
Rated Operating Current	A	0.16	0.25	0.40	0.63	1.0	1.6	2.5	4.0	6.3	10	16	20	25	32
Current Setting Range①	A	0.10 ~ 0.16	0.16 ~ 0.25	0.25 ~ 0.40	0.40 ~ 0.63	0.63 ~ 1.0	1.0 ~ 1.6	1.6 ~ 2.5	2.5 ~ 4.0	4.0 ~ 6.3	6.3 ~ 10	10 ~ 16	16 ~ 20	20 ~ 25	25 ~ 32
Magnetic Trip Current	A	2.1	3.3	5.2	8.2	13	21	33	52	82	130	208	260	325	416
Operating Frequency	Hz	50/60													
Power Dissipation per pole	W	5	5	5	5	6	6	6	6	6	7	8	8	8	8
Electrical Life	Ops.	100,000													
Maximum Operating Rate	Ops./Hr.	15													
ELECTRICAL UL/CSA APPLICATIONS															
MAIN CIRCUITS															
Rated Operating Voltage, Ue	VAC	600													
RATED 1 PHASE OPERATING POWER, Pe															
115V	HP	—	—	—	—	—	—	—	1/8	1/4	1/2	1	1-1/2	2	—
230V	HP	—	—	—	—	—	1/10	1/6	1/3	3/4	1-1/2	3	3	3	5
RATED 3 PHASE OPERATING POWER, Pe															
200V	HP	—	—	—	—	—	1/4	1/2	3/4	1-1/2	3	5	5	7-1/2	10
230V	HP	—	—	—	—	—	1/3	1/2	1	1-1/2	3	5	7-1/2	7-1/2	10
460V	HP	—	—	—	—	1/2	3/4	1-1/2	2	3	7-1/2	10	15	15	20
575V	HP	—	—	—	1/4	1/2	1	1-1/2	3	5	10	15	20	20	25
MANUAL MOTOR CONTROLLER, MAXIMUM SHORT CIRCUIT CURRENT															
@ 480V	kA	50	50	50	50	50	50	50	50	50	50	50	50	50	50
@ 600V	kA	25	25	25	25	25	25	25	25	25	25	25	25	25	25
MANUAL MOTOR CONTROLLER IN GROUP INSTALLATIONS, MAXIMUM SHORT CIRCUIT CURRENT															
@ 480V	kA	50	50	50	50	50	50	50	50	50	50	50	50	50	50
Maximum Fuse②	A	450	450	450	450	450	450	450	450	450	450	450	450	450	450
@ 600V	kA	25	25	25	25	25	25	25	25	25	25	25	25	25	25
Maximum Fuse②	A	450	450	450	450	450	450	450	450	450	450	450	450	450	450
MANUAL MOTOR CONTROLLER SUITABLE FOR TAP CONDUCTOR PROTECTION IN GROUP INSTALLATIONS, MAXIMUM SHORT CIRCUIT CURRENT															
@ 480V	kA	50	50	50	50	50	50	50	50	50	50	50	50	50	50
Maximum Fuse ②	A	450	450	450	450	450	450	450	450	450	450	450	450	450	450
@ 600V	kA	25	25	25	25	25	25	25	25	25	25	25	25	25	25
Maximum Fuse ②	A	450	450	450	450	450	450	450	450	450	450	450	450	450	450

① 330-T25S only.
② Not to exceed the maximum fuse/circuit breaker size, per the National Electrical Code.
NOTE: **** Represents the current and power ratings code. Refer to pages 6 & 7.

ELECTRICAL, MECHANICAL & ENVIRONMENTAL SPECIFICATIONS

		CAT. NO. 330-T25S✳✳✳✳ AND 330-M25✳✳✳✳													
		2C16	2C25	2C40	2C63	2D10	2D16	2D25	2D40	2D63	2U10	2U16	2U20	2U25	2U32
ELECTRICAL IEC APPLICATIONS															
	UNITS														
MAIN CIRCUITS															
Rated Insulation Voltage, Ui	V	690													
Rated Impulse Voltage, Uimp	kV	6													
Rated Operating Voltage, Ue	VAC	690													
RATED 3 PHASE AC-3 OPERATING POWER, Pe															
230V	kW	—	—	—	0.06	0.12	0.18	0.37	0.75	1.1	2.2	3.7	3.7	5.5	7.5
400/415V	kW	—	0.06	0.09	0.12	0.25	0.55	0.75	1.5	2.2	4	7.5	9	12.5	15
500V	kW	—	0.06	0.12	0.25	0.37	0.75	1.1	2.2	3	4	9	12.5	15	18.5
690V	kW	0.06	0.12	0.18	0.25	0.55	1.1	1.5	3	4	7.5	12.5	15	22	30
ULTIMATE SHORT CIRCUIT BREAKING CAPACITY, Icu															
230V	kA	100	100	100	100	100	100	100	100	100	100	100	100	100	100
400/415V	kA	100	100	100	100	100	100	100	100	100	50	50	50	50	50
440V	kA	100	100	100	100	100	100	100	100	100	50	50	50	50	50
500V	kA	100	100	100	100	100	100	100	100	100	42	10	10	10	10
690V	kA	100	100	100	100	100	100	8	6	6	6	4	4	4	4
RATED SERVICE SHORT CIRCUIT BREAKING CAPACITY, Ics															
230V	kA	100	100	100	100	100	100	100	100	100	100	100	100	100	100
400/415V	kA	100	100	100	100	100	25	25	25	25	25	25	25	25	25
440V	kA	100	100	100	100	100	100	100	100	100	25	15	15	15	15
500V	kA	100	100	100	100	100	100	100	100	100	21	8	8	8	8
690V	kA	100	100	100	100	100	100	8	3	3	3	3	3	3	3
BACK-UP FUSES, gG/gL③															
230V	A	④	④	④	④	④	④	④	④	④	④	④	④	④	④
400/415V	A	④	④	④	④	④	④	④	④	④	④	100	125	125	125
400V	A	④	④	④	④	④	④	④	④	④	80	80	80	100	100
500V	A	④	④	④	④	④	④	④	④	④	63	80	80	80	80
690V	A	④	④	④	④	④	④	25	32	50	50	63	63	63	63
MECHANICAL															
Mechanical Life	Ops.	100,000													
ENVIRONMENTAL															
Ambient Operating Temperature	°C / °F	-20 to 60 / -4 to 140													
Ambient Storage Temperature	°C / °F	-50 to 80 / 58 to 176													
Altitude	m / ft.	2,000 / 6,562													
Shock	g	15													

③ Back-up fuse required only if Icc > Icu.
④ No back-up fuse required.
NOTE: ✳✳✳✳ Represents the current and power ratings code. Refer to pages 6 & 7.

CONSTRUCTION SPECIFICATIONS

		CAT. NO. 330-T25S**** AND 330-M25S****													
		2C16	2C25	2C40	2C63	2D10	2D16	2D25	2D40	2D63	2U10	2U16	2U20	2U25	2U32
CONSTRUCTION															
	UNITS														
Number of Poles	ul	3													
Trip Class	ul	10													
Over Voltage Category	ul	III													
Pollution Degree	ul	3													
INGRESS PROTECTION															
Main Circuit Terminals		IP20													
Control Circuit Terminals		IP20													
WEIGHT	kg	0.32													
	lbs	0.7													
CONDUCTOR SIZE															
UL/CSA	AWG	2 x 14 ~ 10													
Solid	mm^2	2 x 1 ~ 2.5													
Stranded	mm^2	2 x 1 ~ 2.5													
Fine Stranded	mm^2	2 x 1 ~ 2.5													
TERMINAL TORQUE	Nm	2 ~ 2.5													
	Lb-in.	17.7 ~ 22.1													
ROHS COMPLIANCE		For RoHS compliance documentation by product, refer to www.c3controls.com													

NOTE: **** Represents the current and power ratings code. Refer to pages 6 & 7.

TYPE 2 COORDINATION SPECIFICATIONS①

MOTOR PROTECTION CIRCUIT BREAKER				
WITH THERMAL AND MAGNETIC TRIP ELEMENTS	**WITH MAGNETIC TRIP ELEMENT ONLY**	**MAXIMUM SHORT CIRCUIT CURRENT @ 480V**	**MAXIMUM FUSE OR CIRCUIT BREAKER (AMP)②**	**CONTACTOR③**
330-T25S2C16	330-M25S2C16	50kA	450A	300-S09
330-T25S2C25	330-M25S2C25	50kA	450A	300-S09
330-T25S2C40	330-M25S2C40	50kA	450A	300-S09
330-T25S2C63	330-M25S2C63	50kA	450A	300-S09
330-T25S2D10	330-M25S2D10	50kA	450A	300-S09
330-T25S2D16	330-M25S2D16	50kA	450A	300-S09
330-T25S2D25	330-M25S2D25	50kA	450A	300-S09
330-T25S2D40	330-M25S2D40	50kA	450A	300-S09
330-T25S2D63	330-M25S2D63	50kA	450A	300-S09
330-T25S2U10	330-M25S2U10	50kA	450A	300-S09
330-T25S2U16	330-M25S2U16	50kA	450A	300-S12
330-T25S2U20	330-M25S2U20	50kA	450A	300-S18
330-T25S2U25	330-M25S2U25	50kA	450A	300-S25
330-T25S2U32	330-M25S2U32	50kA	450A	300-S32

① Type 2 Coordination requires that, under short-circuit conditions, the contactor or starter shall cause no danger to persons or installation and shall be suitable for further use. The risk of contact welding is recognized, in which case the manufacturer shall indicate the measures to be taken with regard to the maintenance of the equipment.

② Per the National Electrical Code.

③ Minimum size contactor shown. Type 2 Coordination can also be achieved with a larger size contactor. For example: a 300-S12 instead of a 300-S09, or a 300-S18 instead of a 300-S12.

AUXILIARY CONTACTS SPECIFICATIONS

		SIDE MOUNTED AUXILIARY CONTACT 330-SA	FRONT MOUNTED AUXILIARY CONTACT 330-FA
ELECTRICAL GENERAL			
	UNITS		
Minimum Switching Capacity	A	5mA @ 17V	5mA @ 17V
ELECTRICAL UL/CSA APPLICATIONS			
Rated Operating Voltage, Ue	V	600	300
PILOT DUTY RATING		50/60	
AC		A600	C300
DC		Q600	R300
General Use		10A @ 600V	2.5A @ 240V
ELECTRICAL IEC APPLICATIONS			
Rated Insulation Voltage, Ui	V	690	250
Rated Operating Voltage, Ue	V	690	250
RATED AC-15 OPERATING CURRENT, Ie			
24V	A	6	2
230V	A	4	0.5
380-415V	A	3	—
440-500V	A	2	—
RATED DC-13 OPERATING CURRENT, Ie			
24V	A	2	1
60V	A	0.5	0.15
110V	A	0.5	—
220V	A	0.25	—
Short Circuit Protection with Fuses (gG/gL)	A	10	10
CONSTRUCTION			
Over Voltage Category	ul	III	III
Pollution Degree	ul	3	3
INGRESS PROTECTION			
Control Circuit Terminals	ul	IP20	IP20
WEIGHT	g	20	38
	oz.	0.71	1.34
CONDUCTOR SIZE			
UL/CSA	AWG	2 x 18 ~ 14	2 x 18 ~ 14
Solid	mm^2	2 x 0.5 ~ 2.5	2 x 0.5 ~ 2.5
Stranded	mm^2	2 x 0.5 ~ 2.5	2 x 0.5 ~ 2.5
Fine Stranded	mm^2	2 x 0.5 ~ 2.5	2 x 0.5 ~ 2.5
Terminal Torque	Nm	1 ~ 1.25	1 ~ 1.25
	Lb-in.	8.9 ~ 11.1	8.9 ~ 11.1

RELEASE MODULES SPECIFICATIONS			
		UNDER VOLTAGE RELEASE MODULES 330-UR	SHUNT RELEASE MODULES 330-SR
ELECTRICAL			
	UNITS		
Rated Operating Voltage, Ue	V	24 ~ 600	24 ~ 440
Operating Range	ul	—	70 ~ 110%
Pick-Up Voltage	ul	85 ~ 110%	—
Drop-Out Voltage	ul	70 ~ 35%	—
POWER CONSUMPTION			
Pick-Up	VA	—	20.2
Sealed	VA	—	7.2
CONSTRUCTION			
INGRESS PROTECTION			
Control Circuit Terminals	ul	IP20	IP20
WEIGHT	g	115	115
	oz.	4.1	4.1
CONDUCTOR SIZE			
UL/CSA	AWG	2 x 18 ~ 14	2 x 18 ~ 14
Solid	mm^2	2 x 0.5 ~ 2.5	2 x 0.5 ~ 2.5
Stranded	mm^2	2 x 0.5 ~ 2.5	2 x 0.5 ~ 2.5
Fine Stranded	mm^2	2 x 0.5 ~ 2.5	2 x 0.5 ~ 2.5
Terminal Torque	Nm	1 ~ 1.25	1 ~ 1.25
	Lb-in.	8.9 ~ 11.1	8.9 ~ 11.1

CIRCUIT DIAGRAMS

1 Phase – 1 Pole

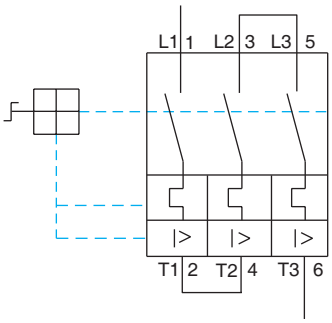

1 Phase – 2 Pole

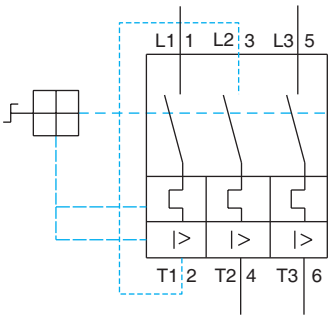

3 Phase – 3 Pole

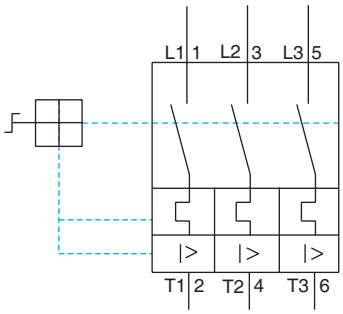

Traditional Multi-Motor Application

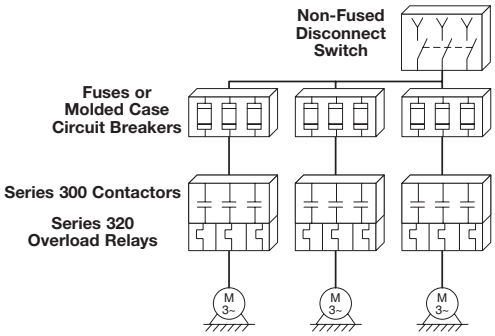

Group Motor Application

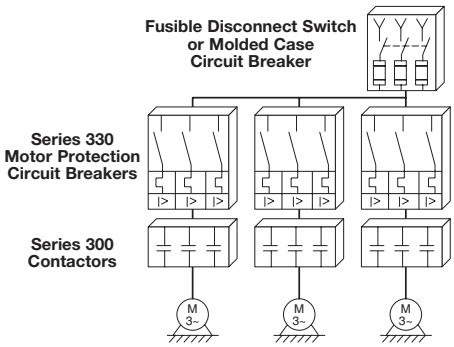

Self-Protected Motor Application

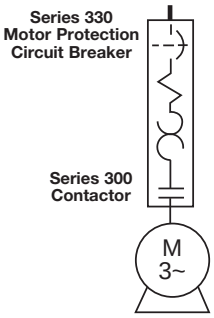

330-T25S & 300-S

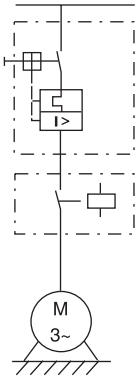

330-M25S & 300-S

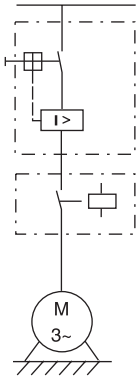

TRIP CHARACTERISTICS

330-T25S

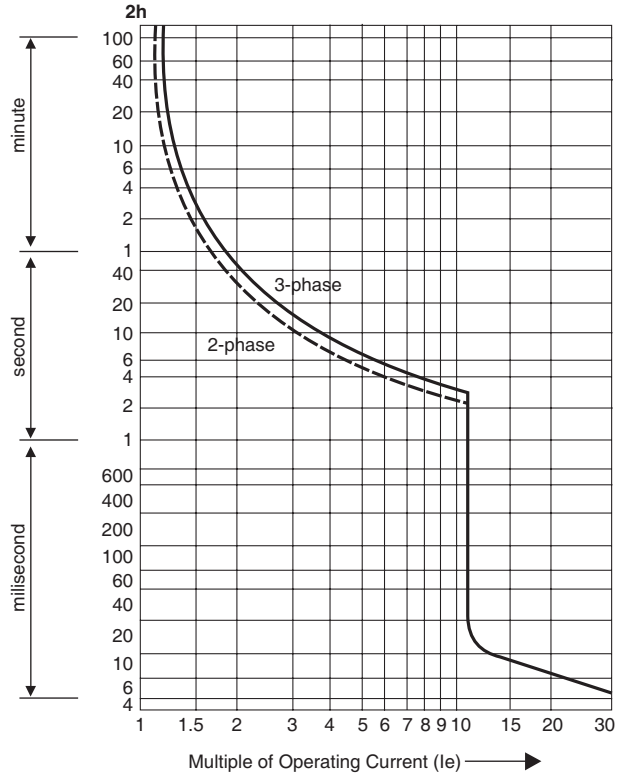

330-M25S*

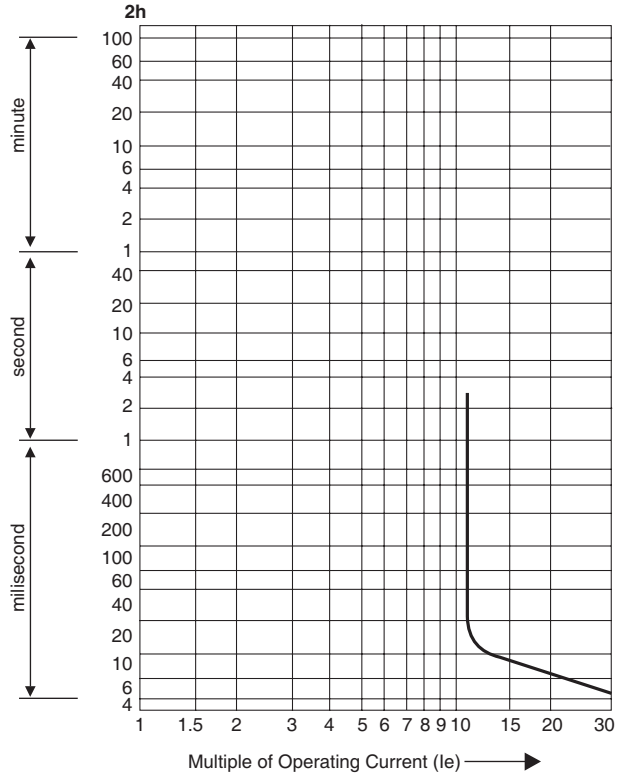

*NOTE: Protection below short circuit rating (12x Full Load Current) is provided by an overload protective device (ex. Series 320 or similar function built into the motor).

OPERATING POSITION

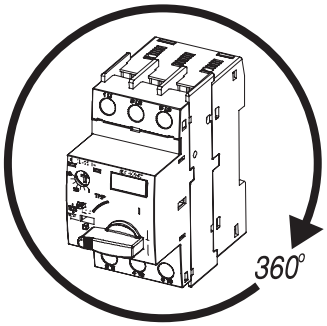

MOTOR PROTECTION CIRCUIT BREAKER

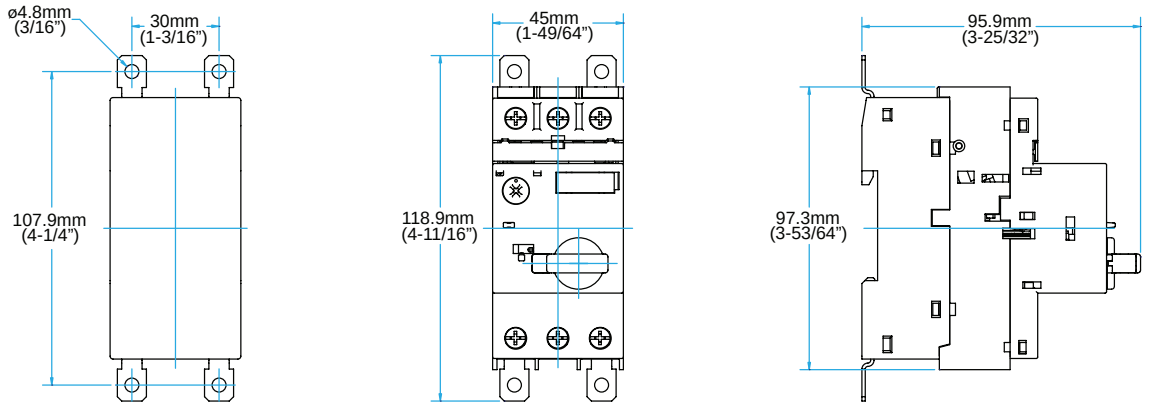

TYPE E CONSTRUCTION – MOTOR PROTECTION CIRCUIT BREAKER

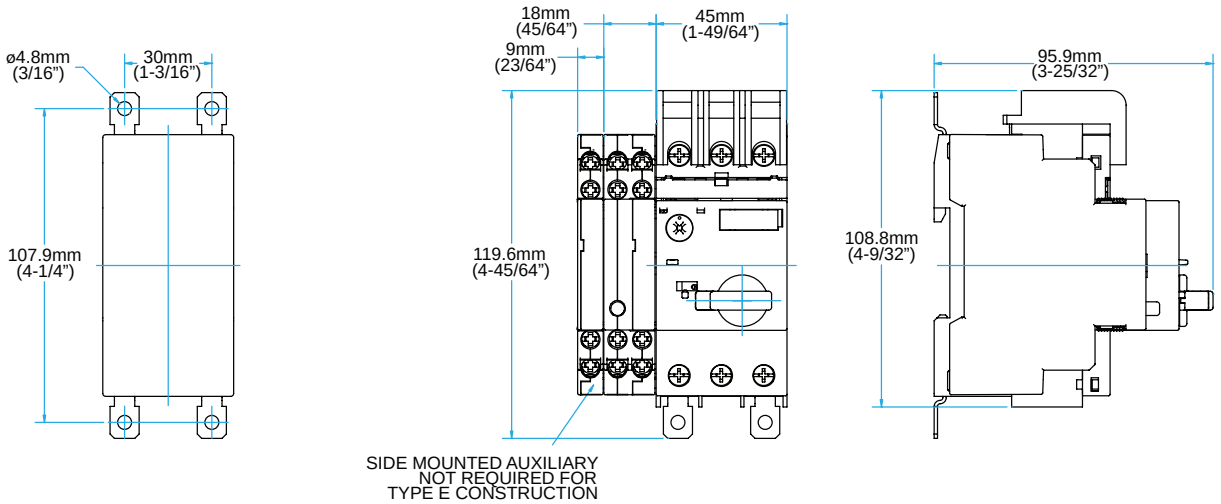

MOTOR PROTECTION CIRCUIT BREAKER WITH SIDE MOUNTED AUXILIARY, FRONT MOUNTED AUXILIARY, SHUNT RELEASE AND UNDERVOLTAGE RELEASE MODULES

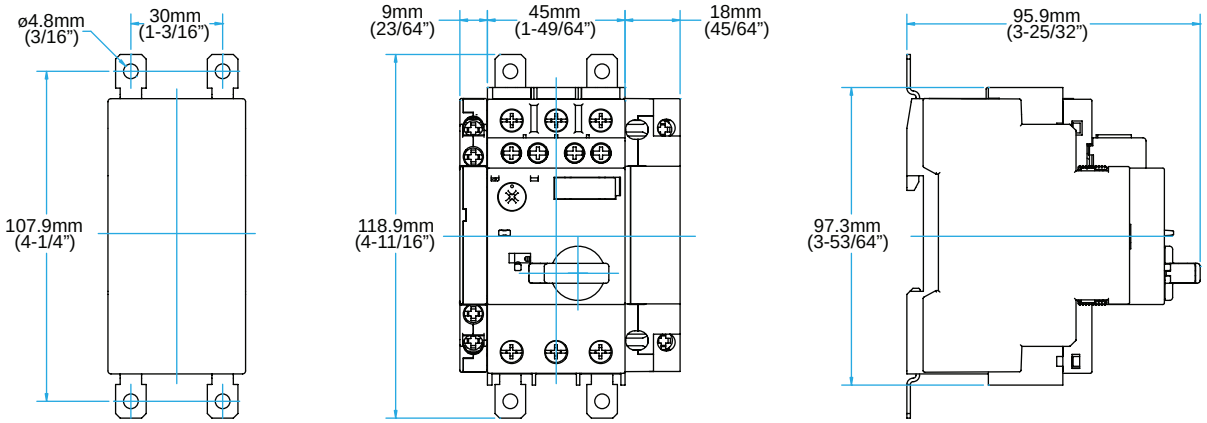

EXTERNAL OPERATING HANDLE

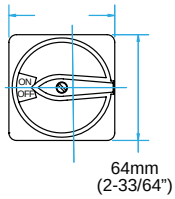

PANEL LAYOUT

NOTE: The center of the handle is 12mm (31/64") below the mounting center of the Series 330 Operator.

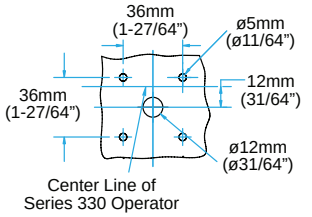

35mm DIN RAIL MOUNTING

PANEL MOUNTING

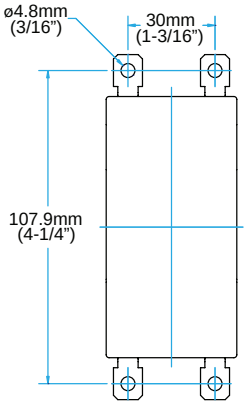

SHAFT CUTTING INSTRUCTIONS

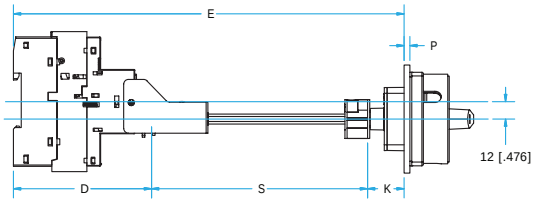

E = Enclosure Depth
P = Panel Thickness
D = Device Depth
S = Shaft Length
K = Shaft Constant (27mm [1.06"])

S = E - D - K*

Minimum Panel Thickness (P) = 1mm (0.04")
Maximum Panel Thickness (P) = 4mm (0.16")

Minimum Enclosure Depth (E) = 177mm (6.97")
Maximum Enclosure Depth (E) = 421mm (16.57")

*NOTE: Subtract an additional 2.3mm (0.09") when mounting the Series 330 Motor Protection Circuit Breaker onto a DIN rail.

MOTOR PROTECTION CIRCUIT BREAKER ENCLOSURES

Frame Size 1

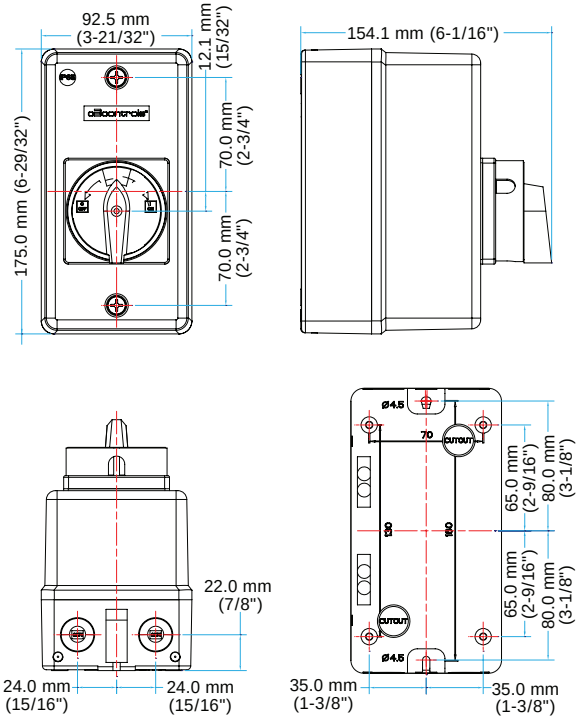

Frame Size 2

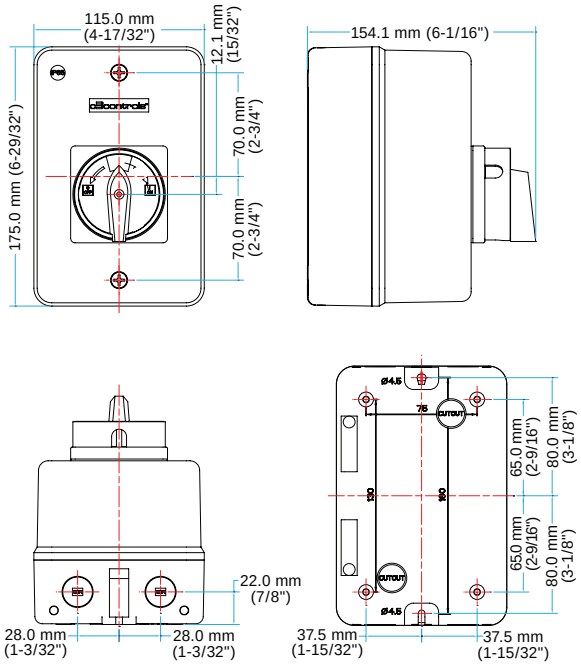

COMMONING LINKS AND FEEDER TERMINAL

330-T25S and 330-M25S with Commoning Links (330-CL45*S2 and 330-CL54*S2) and Feeder Terminal (330-FT1)

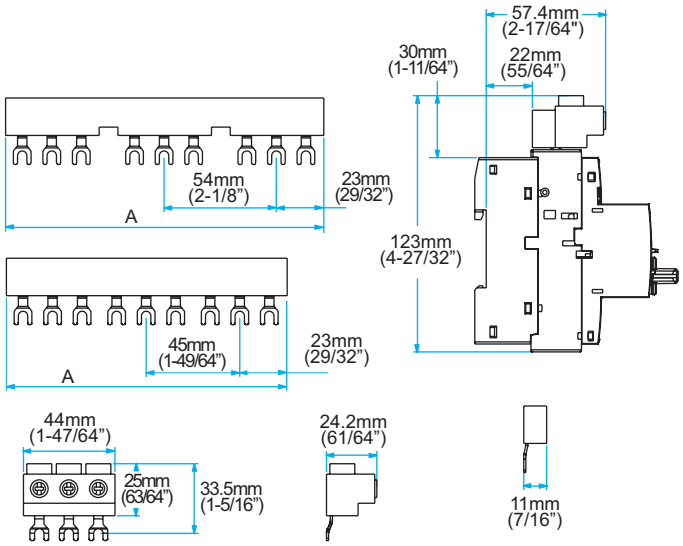

COMMONING LINKS		
CODE	**FOR USE WITH**	**A (LENGTH)**
	45MM SPACING	
330-CL452	2 Motor Protection Circuit Breakers	91mm (3-37/64")
330-CL453	3 Motor Protection Circuit Breakers	136mm (5-23/64")
330-CL454	4 Motor Protection Circuit Breakers	181mm (7-1/8")
330-CL455	5 Motor Protection Circuit Breakers	226mm (8-29/32")
	54MM SPACING	
330-CL542	2 Motor Protection Circuit Breakers	100mm (3-15/16")
330-CL543	3 Motor Protection Circuit Breakers	154mm (6-1/16")
330-CL544	4 Motor Protection Circuit Breakers	208mm (8-3/16")
330-CL545	5 Motor Protection Circuit Breakers	262mm (10-5/16")

NOTE: *Represents the code for the number of motor protection circuit breakers. Refer to the chart above or page 13.

VISIT WWW.C3CONTROLS.COM TO DOWNLOAD CAD DRAWINGS

ENCLOSED MOTOR PROTECTION CIRCUIT BREAKERS

series E330

When you need reliable overload and short circuit protection for your motor control application, look to c3controls. Our Series E330 Enclosed Motor Protection Circuit Breakers are ideal for use in multi-motor applications – providing space, labor, and cost savings. The ABS plastic enclosure is rated IP55 and is CE certified, making them suitable for use anywhere in the world.

Section 10

Enclosed Motor Protection Circuit Breakers	6
Accessories	8
Specifications	9
Dimensions	10

PROVEN

Conformity to Standards:

MOTOR PROTECTION CIRCUIT BREAKERS

UL 508, 60947-4-1

CSA C22.2 No. 14

IEC 60947-1, 60947-4-1

ENCLOSURES

IEC 60529

Certifications:

UL File #: E187641 (Guide NLRV, NLRV7), E312106 (Guide NKJH, NKJH7)

CE Marked (per EU Low Voltage Directive 2006/95/EC and RoHS Directive 2011/65/EU)

CE Marked (per EU Low Voltage Directive 2006/95/EC and RoHS Directive 2011/65/EU)

Visit www.c3controls.com to download product certifications.

NOTE: The scope (range, description, price, specifications, dimensions, etc.) of the product featured in this section is subject to change without notice. Refer to www.c3controls.com for product updates.

ENCLOSED MOTOR PROTECTION CIRCUIT BREAKERS

c3controls offers a comprehensive line of Motor Control products designed and manufactured to meet the needs of the machine builder. We promise durable products at a price that gives you an edge, and we guarantee same-day shipping. Check out all the features of our Series E330 Enclosed Motor Protection Circuit Breakers below!

DELIVERING SUPERIOR PRODUCT QUALITY AND MANUFACTURING EXCELLENCE

✓ **Proven**	Our Series 330 Motor Protection Circuit Breakers are UL Listed and CE marked and our enclosures are CE marked meeting global standards requirements.
✓ **Self-Protected**	Our self-protected devices eliminate the need for upstream fuses and circuit breakers, and they provide reliable motor protection.
✓ **Ratings**	Compact size – Series 330 Motor Protection Circuit Breakers are only 45mm (1-49/64") wide up to 20HP @ 460V (15kW @ 400V).
✓ **Visible Markings**	High visibility labels and markings; dual IEC and NEMA terminal markings for ease of wiring anywhere in the world.
✓ **Convenient**	Factory assembly of a Series 330-T25S Motor Protection Circuit Breaker and ABS Plastic Enclosure, and configured accessories provide the convenience of a single catalog number simplifying bill of material and ordering.
✓ **Space Savings**	Control panel sizes can be reduced because the short circuit protection provided by the Series 330 enables individual motor branch circuit fuses or circuit breakers and overload relays to be eliminated.
✓ **Added Safety**	IP20 guarded terminals with dual terminal markings prevent accidental contact with live parts.
✓ **Reliability**	Series 330 Motor Protection Circuit Breakers provide reliable and accurate Trip Class 10 protection against overload and phase-loss conditions.
✓ **36-Month Warranty***	Every product is backed by our 36-Month Warranty—giving you confidence in the quality, reliability, and performance of components designed for the most demanding applications.
✓ **Guaranteed Same-Day Shipping***	Product availability reduces inventory, and improves cash-flow—saving you money. With c3controls any order for standard catalog items received by 6:00pm ET is guaranteed to ship same-day.
✓ **Advantage Pricing**	Our approach to product development, manufacturing, and focus on servicing the OEM and Electrical Equipment Builder reduces cost. The result—the best value in the industry.

*See c3controls Terms & Conditions

"In an economy where nearly everyone is cutting quality and raising costs, c3controls is still offering an excellent range of products. We've never had a quality control issue and anytime we place an order we know it will be on the truck for delivery that afternoon. When there's a need for a part no one else provides, c3controls always seems to have it, and they make getting it easy."

Jason Clark, Senior Engineer • **Plant Power & Control Systems**

Frame Size 1

Frame Size 2

UNIQUE PRODUCT LINE FEATURES

CUSTOM FIT ENCLOSURE DESIGN

ABS Plastic enclosure designed specifically for the motor protection circuit breaker with integrated ground and neutral connections, and four knock outs.

PADLOCKABLE SWITCHES

Handle can be padlocked in the "OFF" position with up to three padlocks for extra safety during maintenance.

SNAP-ON ACCESSORIES

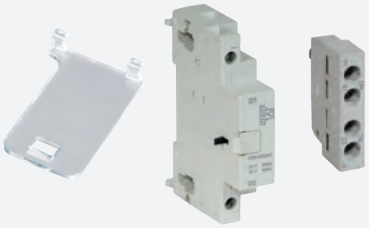

Snap-on side mounted accessories easily install on Series 330 Motor Protection Circuit Breakers without the use of tools, lowering assembly and installation costs.

REMOVABLE MARKINGS

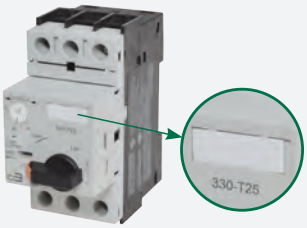

Removable/replaceable identification marker, standard on all c3controls Series 330 Motor Protection Circuit Breakers, simplifies troubleshooting.

ADDED SAFETY

Our door interlock allows entry into the enclosure only when the switch is in the OFF position, while our pistol operating handles include a concealed "defeater mechanism" that must be operated with a tool and allows entry when the switch is in the ON position.

FIND IT FAST

Enclosed Motor Protection Circuit Breakers

- Certifications
- Specifications
- Dimension Drawings
- Installation Instructions
- Easy to Buy

www.c3controls.com

Motor Control Device Solutions

c3controls motor control devices are the perfect solution for manufacturers who want proper motor control and superior motor protection without having to overpay or compromise on quality. In fact, we engineer so much performance and flexibility into our products, we can deliver a remarkably better value than our competitors.

c3controls products deliver like no other.

Seamless Compatibility

Contactors, overload relays and motor protection circuit breakers are designed by c3controls to work together, with common connections and accessories, resulting in a high functioning compact starter.

LEADING THE INDUSTRY
with our compact miniature 10HP contactors and control relays. One frame size (AC or DC)—28% reduction in panel area.

Compact

The small size of c3controls motor control devices, plus features like common accessories, enable assembly into smaller control panels for lower installed costs.

Reliable Protection

Contactors provide the repeated on/off switching for the motor and are designed for motor, actuator, solenoid, and other power switching applications. Overload relays provide Trip Class 10 protection against overload and phase-loss conditions, and have ambient temperature compensation for motor protection in high temperature environments.

Ensures the protection of equipment and user.

Motor protection circuit breakers provide overload, phase-loss and short circuit protection, and can be used by themselves as manual motor controllers or with contactors in group motor installations, and can achieve Type 2 coordination for optimum performance.

Type E self-protected combination manual motor controllers provide disconnecting means, branch circuit protection, motor control and motor overload protection all in a single device.

Proven

Our motor control devices are UL Listed and CE marked, meeting global standards requirements for use anywhere in the world.

NFPA 70 - National Electrical Code (NEC)

Understanding what functions are needed in your motor control circuit is critical when selecting motor control devices. Engineers benefit from the standards and codes established to ensure safety and protection to personnel and equipment.

More than just knowing the standards, c3controls, as a manufacturer of motor control products, has the application expertise you need to select the right products.

c3controls & Article 430 - Motors, Motor Circuits and Controllers

	To Supply	NEC Part	c3controls Product Series		
Motor disconnecting means		Part IX	330	630	Type E: 330 630
Motor branch-circuit, short circuit, and ground-fault protection		Part IV			Type E: 330 630
Motor circuit conductor		Part II			
Motor controller		Part VII	300/310 330	620 630	Type E: 330 630
Motor control circuits		Part VI			
Motor overload protection		Part III	320 330	620 630	Type E: 330 630
Motor		Part I			

Our motor control products align with Article 430 Part VII, Motor Controller, of the NFPA 70, the National Electrical Code.

IT'S EASY TO BUILD YOUR OWN ENCLOSED MOTOR PROTECTION CIRCUIT BREAKER

Simply pick the code number from each of the sections below and combine them to build your part number.

Enclosed Motor Protection Circuit Breakers

E330 – _____ – _____ E _____ – _____ / _____

I II III IV V VI VII

Example: To build one of our most popular Enclosed MPCBs, the part number would be **E330 + II + III + E + V + VI + VII** or **E330-T2U10-ABS1ERY-F11**

I. OPERATOR TYPE

CODE	DESCRIPTION	LIST
E330	32A Motor Protection Circuit Breaker with Thermal and Magnetic Trip Elements	$ 18.00

DISCOUNT SCHEDULE **H**

II. MOTOR PROTECTION CIRCUIT BREAKERS (THERMAL AND MAGNETIC TRIP ELEMENTS)

CODE	RATED OPER. CURRENT (A)	ADJUSTMENT RANGE (A)	MAGNETIC TRIP CURRENT (A)	ULTIMATE INTERRUPTING CURRENT (Icu) (kA)		RATINGS FOR SWITCHING AC MOTORS*								MOTOR PROTECTION CIRCUIT BREAKER CAT. NO.	LIST
						3 PHASE kW (50Hz)				3 PHASE HP (60Hz)					
				400V	480V	230V	400/415V	500V	690V	200V	230V	460V	575V		
T2C16	0.16	0.10 ~ 0.16	2.1	100	100	—	—	—	0.06	—	—	—	—	330-T25S2C16	$122.00
T2C25	0.25	0.16 ~ 0.25	3.3	100	100	—	0.06	0.06	0.12	—	—	—	—	330-T25S2C25	$122.00
T2C40	0.40	0.25 ~ 0.40	5.2	100	100	—	0.09	0.12	0.18	—	—	—	—	330-T25S2C40	$132.00
T2C63	0.63	0.40 ~ 0.63	8.2	100	100	0.06	0.12	0.25	0.25	—	—	—	1/4	330-T25S2C63	$136.00
T2D10	1.0	0.63 ~ 1.0	13	100	100	0.12	0.25	0.37	0.55	—	—	1/2	1/2	330-T25S2D10	$139.00
T2D16	0.6	1.0 ~ 1.6	21	100	100	0.18	0.55	0.75	1.1	1/4	1/3	3/4	1	330-T25S2D16	$139.00
T2D25	2.5	1.6 ~ 2.5	33	100	100	0.37	0.75	1.1	1.5	1/2	1/2	1-1/2	1-1/2	330-T25S2D25	$139.00
T2D40	4.0	2.5 ~ 4.0	52	100	100	0.75	1.5	2.2	3	3/4	1	2	3	330-T25S2D40	$139.00
T2D63	6.3	4.0 ~ 6.3	82	100	100	1.1	2.2	3	4	1-1/2	1-1/2	3	5	330-T25S2D63	$148.00
T2U10	10	6.3 ~ 10	130	100	42	2.2	4	4	7.5	3	3	7-1/2	10	330-T25S2U10	$154.00
T2U16	16	10 ~ 16	208	50	10	3.7	7.5	9	12.5	5	5	10	15	330-T25S2U16	$170.00
T2U20	20	16 ~ 20	260	50	10	3.7	9	12.5	15	5	7-1/2	15	20	330-T25S2U20	$185.00
T2U25	25	20 ~ 25	325	50	10	5.5	12.5	15	22	7-1/2	7-1/2	15	20	330-T25S2U25	$218.00
T2U32	32	25 ~ 32	416	50	10	7.5	15	18.5	30	10	10	20	25	330-T25S2U32	$218.00

*NOTE: HP and kW ratings shown in the table above are for reference. The final selection of the motor protection circuit breaker must be based on the actual motor full load current.

III. ENCLOSURE TYPE

CODE	DESCRIPTION	DIMENSION REF.	CAT. NO.	LIST
ABS1	ABS Plastic	1	330-BABS1	$ 63.00
ABS2	ABS Plastic	2	330-BABS2	$ 78.00

IV. OPERATING HANDLE TYPE

CODE	FOR ENCLOSURE TYPE	DIMENSION REF.	DESCRIPTION
E	ABS	1, 2	Round (IP55)

Available Frame Sizes and Handle Color Options for Enclosed Motor Protection Circuit Breakers

Frame Size 1

Frame Size 2

Some of Our Popular Configurations:

ENCLOSED IEC MOTOR PROTECTION CIRCUIT BREAKERS

CATALOG NUMBER	DESCRIPTION	LIST
E330-T2D63-ABS1ERY	Enclosed Motor Protection Circuit Breaker, Thermal and Magnetic Version, 4.0 ~ 6.3A Adj. Range, ABS Box Dimension 1, Round (IP55) Red/Yellow Handle	$230.00
E330-T2D63-ABS1EBG	Enclosed Motor Protection Circuit Breaker, Thermal and Magnetic Version, 4.0 ~ 6.3A Adj. Range, ABS Box Dimension 1, Round (IP55) Black/Grey Handle	$230.00
E330-T2D63-ABS1ERY-F11	Enclosed Motor Protection Circuit Breaker, Thermal and Magnetic Version, 4.0 ~ 6.3A Adj. Range, ABS Box Dimension 1, Round (IP55) Red/Yellow Handle, Front Mounted 1 NO + 1 NC Auxiliary	$250.00
E330-T2U10-ABS1ERY-F11	Enclosed Motor Protection Circuit Breaker, Thermal and Magnetic Version, 6.3 ~ 10A Adj. Range, ABS Box Dimension 1, Round (IP55) Red/Yellow Handle, Front Mounted 1 NO + 1 NC Auxiliary	$256.00

ENCLOSED MOTOR PROTECTION CIRCUIT BREAKER (CONT.)

V. HANDLE COLOR

CODE	COLOR
BG	Black/Grey
RY	Red/Yellow

VI. FRONT MOUNTED OPTIONS

CODE	FOR ENCLOSURE DIMENSION REF.	DESCRIPTION	CAT. NO.	LIST
(Blank)	—	None	—	—
F11	1, 2	Front Mounted 1 NO and 1 NC	330-FA11S25	$ 21.00

VII. SIDE MOUNTED OPTIONS

CODE	FOR ENCLOSURE DIMENSION REF.	DESCRIPTION	CAT. NO.	LIST
(Blank)	—	None	—	—
S11	1, 2	Side Mounted 1 Normally Open and 1 Normally Closed	330-SA11S25	$ 21.00
S20	1, 2	Side Mounted 2 Normally Open	330-SA20S25	$ 21.00
SR25XC	2	Shunt Release Module 20 ~ 24V 50/60Hz	330-SR25XC	$ 50.00
SR25XJ	2	Shunt Release Module 40 ~ 48V 50/60Hz	330-SR25XJ	$ 50.00
SR25XAH	2	Shunt Release Module 100 ~ 127V 50/60Hz	330-SR25XAH	$ 50.00
SR25XF	2	Shunt Release Module 200 ~ 240V 50/60Hz	330-SR25XF	$ 50.00
SR25XQ	2	Shunt Release Module 365 ~ 440V 50/60Hz	330-SR25XQ	$ 50.00
UR25C	2	Undervoltage Release Module 20V 50Hz / 24V 60Hz	330-UR25C	$ 50.00
UR25XC	2	Undervoltage Release Module 24V 50/60Hz	330-UR25XC	$ 50.00
UR25H	2	Undervoltage Release Module 24V 50Hz / 28V 60Hz	330-UR25H	$ 50.00
UR25AG	2	Undervoltage Release Module 95V 50Hz / 110V 60Hz	330-UR25AG	$ 50.00
UR25D	2	Undervoltage Release Module 110V 50Hz / 120V 60Hz	330-UR25D	$ 50.00
UR25AH	2	Undervoltage Release Module 110 ~ 115V 50Hz / 127V 60Hz	330-UR25AH	$ 50.00
UR25L	2	Undervoltage Release Module 180V 50Hz / 208V 60Hz	330-UR25L	$ 50.00
UR25AJ	2	Undervoltage Release Module 190V 50Hz / 220V 60Hz	330-UR25AJ	$ 50.00
UR25F	2	Undervoltage Release Module 208V 50Hz / 240V 60Hz	330-UR25F	$ 50.00
UR25P	2	Undervoltage Release Module 230 ~ 240V 50Hz / 277V 60Hz	330-UR25P	$ 50.00
UR25AL	2	Undervoltage Release Module 325V 50Hz / 380V 60Hz	330-UR25AL	$ 50.00
UR25Q	2	Undervoltage Release Module 380V 50Hz / 440V 60Hz	330-UR25Q	$ 50.00
UR25R	2	Undervoltage Release Module 400 ~ 415V 50Hz / 480V 60Hz	330-UR25R	$ 50.00
UR25T	2	Undervoltage Release Module 500V 50Hz / 600V 60Hz	330-UR25T	$ 50.00

UNIQUE PRODUCT FEATURES

1. The 330 Motor Protection Circuit Breaker Enclosure Accessory is a custom fit enclosure design specifically for the Motor Protection Circuit Breaker, allowing superior performance.
2. ABS Plastic enclosure has integrated ground and neutral connections, and four (4) standard PG16 knock outs (2 on the top and 2 on the bottom).
3. ABS Plastic enclosure handle can be padlocked in the "OFF" position with up to three padlocks for extra safety and the security needed during maintenance activities.
4. The lift off ABS Plastic enclosure has an IP55 environmental rating and is CE certified. Enclosure is interlocked with device and cannot be removed when in the "ON" position.

FRONT MOUNTED AUXILIARY CONTACTS

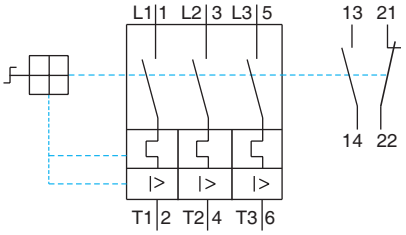

Our front mounted auxiliary contacts do not add depth to the motor protection circuit breaker and installs within its foot print – no extra panel area is required. IP20 guarded terminals protect against accidental contact with live parts. These contacts snap-on and install without the use of tools. NOTE: See chart below for maximum number of front mounted auxiliary contacts. *See MPCB Section 9 Page 10 for front mounted auxiliary contact part number and ordering information.*

MAXIMUM NUMBER OF FRONT OR SIDE MOUNTED AUXILIARY CONTACTS

MOTOR PROTECTION CIRCUIT BREAKER	MAXIMUM NUMBER
330-T25S2, 330-M25S2	8 (one front mounted auxiliary contact module, one side mounted auxiliary contact module, and one side mounted trip indicating auxiliary contact module.)

SHUNT RELEASE MODULES

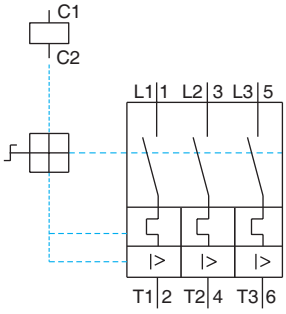

The shunt release module enables the motor protection circuit breaker to be turned "OFF" from a remote location. Snaps-on and installs on the right side of the motor protection circuit breaker without the use of tools. IP20 guarded terminals protect against accidental contact with live parts. Wide range of 50/60Hz operating voltages. Can be used in conjunction with front mounted and side mounted auxiliary contacts. *See MPCB Section 9 Page 11 for shunt release module part number and ordering information.*

ADJUSTMENT SCALE COVER

The adjustment scale cover prevents inadvertent or unauthorized adjustment of the full load current dial setting of the motor protection circuit breaker. *See MPCB Section 9 Page 12 for adjustment scale cover part number and ordering information.*

SIDE MOUNTED AUXILIARY CONTACTS

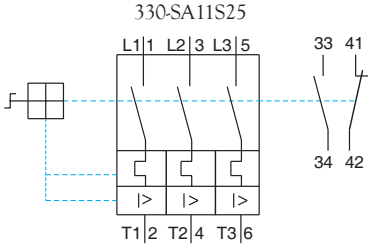

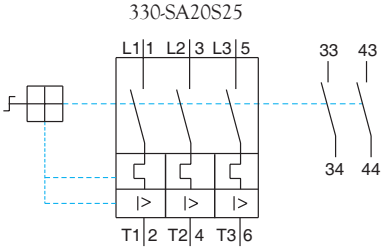

Our side mounted auxiliary contacts feature IP20 guarded terminals to protect against accidental contact with live parts. These contacts snap-on to the left side of the motor protection circuit breaker and install without the use of tools. NOTE: See chart at left for maximum number of side mounted auxiliary contacts. *See MPCB Section 9 Page 10 for side mounted auxiliary contact part number and ordering information.*

UNDERVOLTAGE RELEASE MODULES

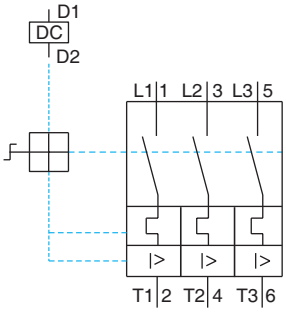

The undervoltage release module automatically trips the motor protection circuit breaker when the supply voltage is less than 70 - 35% of the rated voltage of the undervoltage release module. Undervoltage release modules are ideal to ensure motors do not automatically restart after a power outage when the motor protection circuit breaker is being used by itself as a manual motor controller. Snaps-on and installs on the right side of the motor protection circuit breaker without the use of tools. IP20 guarded terminals to protect against accidental contact with live parts. Wide range of 50/60Hz operating voltages. Can be used in conjunction with front mounted and side mounted auxiliary contacts. *See MPCB Section 9 Page 11 for undervoltage release module part number and ordering information.*

DISCOUNT SCHEDULE H

SPECIFICATIONS:

SERIES E330 ENCLOSED MOTOR PROTECTION CIRCUIT BREAKER SPECIFICATIONS

		SWITCH CURRENT RATING CODE													
	UNITS	T2C16	T2C25	T2C40	T2C63	T2D10	T2D16	T2D25	T2D40	T2D63	T2U10	T2U16	T2U20	T2U25	T2U32
ELECTRICAL GENERAL															
		For detailed motor protection circuit breaker specifications by catalog number, see Section 9 Page 13													
Rated Operating Frequency	Hz	50/60													
ELECTRICAL UL/CSA APPLICATIONS															
		For detailed motor protection circuit breaker specifications by catalog number, see Section 9 Page 13													
Rated Operating Voltage, Ue	VAC	600													
Short Circuit Current Ratings @ 480V AC	kA	50	50	50	50	50	50	50	50	50	50	50	50	50	50
Maximum Fuse or Circuit Breaker Size①	kA	450	450	450	450	450	450	450	450	450	450	450	450	450	450
Short Circuit Current Ratings @ 600V AC	kA	25	25	25	25	25	25	25	25	25	25	25	25	25	25
Maximum Fuse or Circuit Breaker Size①	kA	450	450	450	450	450	450	450	450	450	450	450	450	450	450
ELECTRICAL IEC APPLICATIONS															
		For detailed motor protection circuit breaker specifications by catalog number, see Section 9 Page 14													
Rated Insulation Voltage, Ui	V	690													
Rated Impulse Voltage, Uimp	kV	6													
Rated Operating Voltage, Ue	VAC	690													
MECHANICAL															
		For detailed motor protection circuit breaker specifications by catalog number, see Section 9 Page 14													
ENVIRONMENTAL															
		For detailed motor protection circuit breaker specifications by catalog number, see Section 9 Page 14													
Ambient Operating Temperature	°C / °F	-20 to +55 / -4 to +131													
Ambient Storage Temperature	°C / °F	-50 to +80 / -58 to +176													
Altitude	m / ft.	2,000 / 6,562													
CONSTRUCTION - GENERAL															
		For detailed motor protection circuit breaker specifications by catalog number, see Section 9 Page 15													
Number of Poles		3													
Pollution Degree		3													
Trip Class		10													
INGRESS PROTECTION															
Main Terminals (with conductors connected)		IP20													
Operating Handle															
Code E		IP55													
Enclosure															
Code ABS		IP55													
CONSTRUCTION - CONDUCTOR CROSS SECTIONS		For detailed motor protection circuit breaker specifications by catalog number, see Section 9 Page 15													
ROHS COMPLIANCE		For RoHS compliance documentation by product, refer to www.c3controls.com													

① Not to exceed the maximum fuse/circuit breaker size. Per the National Electrical Code.

MOTOR PROTECTION CIRCUIT BREAKER ENCLOSURES

Frame Size 1

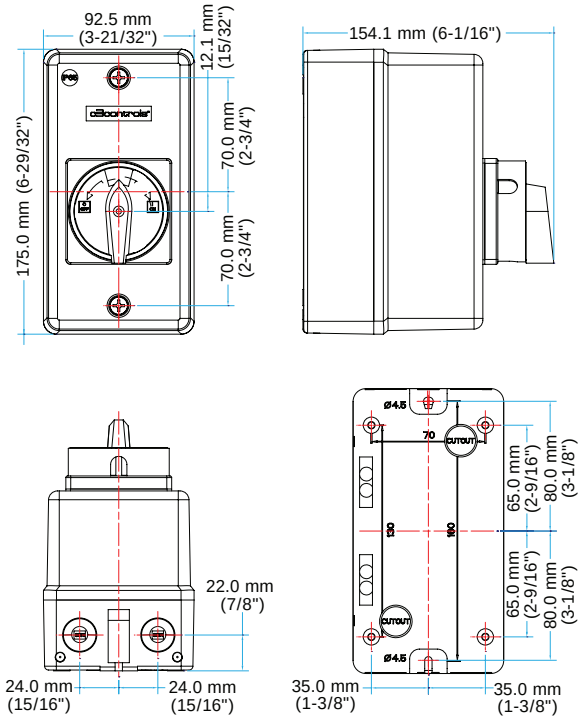

Frame Size 2

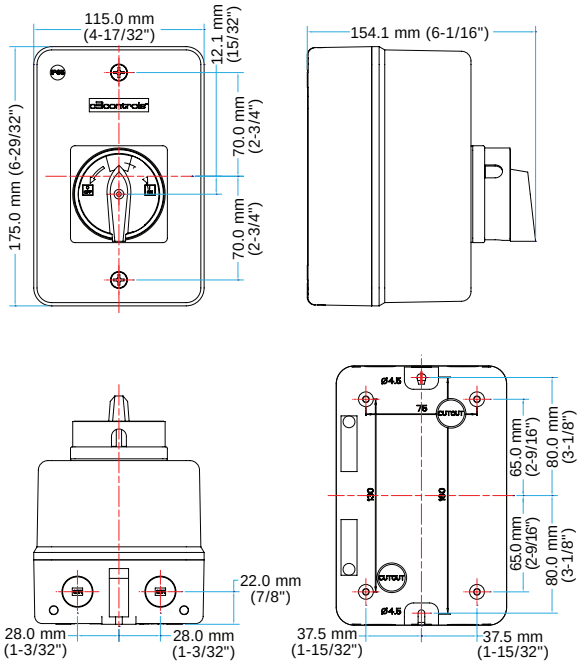

MOTOR PROTECTION CIRCUIT BREAKER & CONTACTOR ASSEMBLIES

series 630

If you're looking for a line of compact, easy-to-install assembled starters that offer reliable protection for your motors against short circuit, overload, and phase loss conditions, look to c3controls. Our Series 630 assembled starters are ideal for use in multi-motor applications, and feature power and control circuit terminals that are readily accessible for easy wiring. They're perfect for where panel space is a premium and device modularity is a must.

Section 11

Direct-On-Line Starters 6
Motor Protection Circuit Breaker + Contactor

Type E Direct-On-Line Starters 9
Motor Protection Circuit Breaker + Contactor

For 200V 3 Phase Motors 10

For 240V 3 Phase Motors 12

For 480Y/277V 3 Phase Motors 14

For 600Y/347V 3 Phase Motors 16

Accessories 18

Specifications 20

Circuit Diagrams & Dimensions 21

PROVEN

Conformity to Standards:

MOTOR PROTECTION CIRCUIT BREAKERS

UL 508, 60947-4-1
CSA C22.2 No. 14
IEC 60947-1, 60947-4-1

CONTACTORS

UL 508, 60947-4-1
CSA C22.2 No. 14
IEC 60947-1, 60947-4-1

Certifications:

UL File #: E187641 (Guide NLRV, NLRV7), E312106 (Guide NKJH, NKJH7)

CE Marked (per EU Low Voltage Directive 2006/95/EC and RoHS Directive 2011/65/EU)

UL File #: E236197 (Guide NLDX, NLDX7), E68568 (Guide NKCR, NKCR7)

CE Marked (per EU Low Voltage Directive 2006/95/EC and RoHS Directive 2011/65/EU)

Visit www.c3controls.com to download product certifications.

NOTE: The scope (range, description, price, specifications, dimensions, etc.) of the product featured in this section is subject to change without notice. Refer to www.c3controls.com for product updates.

MPCB & CONTACTOR ASSEMBLIES

c3controls offers a comprehensive line of Motor Control products designed and manufactured to meet the needs of the machine builder. We promise durable products at a price that gives you an edge, and we guarantee same-day shipping. Check out all the features of our Series 630 Motor Protection Circuit Breaker and Contactor Assemblies below!

DELIVERING SUPERIOR PRODUCT QUALITY AND MANUFACTURING EXCELLENCE

✓ **Proven**	Our Series 630 DOL Starters are UL Listed and CE marked, meeting global standards requirements.
✓ **Modular Design**	The modular design allows Series 300 and Series 330 to be mixed-and-matched in an assembled starter for any combination of a FLC and desired electrical life.
✓ **Circuit Isolation**	The "ON/OFF" manual operator enables individual motor circuits to be easily isolated without having to disconnect all of the circuits in a control panel.
✓ **Type 2 Coordination**	Designed for optimum performance in multi-motor installations, and can achieve Type 2 coordination in circuits capable of delivering up to 50kA at 460V.
✓ **Wide Variety of Accessories**	Including standard auxiliary contacts, trip indicating auxiliary contacts, shunt and undervoltage release modules, and many wiring accessories such as commoning links and feeder terminals for easy distribution of power to multiple motor protection circuit breakers.
✓ **Easy to Install**	35mm DIN rail mounting for fast and easy installation and removal, or panel mounting with mounting feet for more secure installation in high shock and vibration applications.
✓ **Visible Markings**	High visibility labels and markings; dual IEC and NEMA terminal markings for ease of wiring anywhere in the world.
✓ **Space Savings**	Control panel sizes can be reduced because the short circuit protection provided by the Series 330 enables individual motor branch circuit fuses or circuit breakers and overload relays to be eliminated.
✓ **Added Safety**	IP20 guarded terminals with dual terminal markings prevent accidental contact with live parts.
✓ **Limited Lifetime Warranty***	Every product is backed by our limited lifetime warranty—unmatched in the industry—bringing you quality components that perform in the most demanding applications.
✓ **Guaranteed Same-Day Shipping***	Product availability reduces inventory, and improves cash-flow—saving you money. With c3controls any order for standard catalog items received by 6:00pm ET is guaranteed to ship same-day.
✓ **Advantage Pricing**	Our approach to product development, manufacturing, and focus on servicing the OEM and Electrical Equipment Builder reduces cost. The result—the best value in the industry.

*See c3controls Terms & Conditions

> *"Even though they come from the factory preassembled, c3controls' Series 630 starters are much more affordable than the individual parts from Allen Bradley."*

Larry Fontaine, EE Design/Purchasing • **Teemark Corp.**

MPCB + Contactor Assembly

Type E MPCB + Contactor Assembly

UNIQUE PRODUCT LINE FEATURES

CONVENIENCE

Factory assembly of a Series 330 Motor Protection Circuit Breaker and Series 300 Contactor provides the convenience of a single catalog number and shorter control panel bill of material.

SELF-PROTECTED

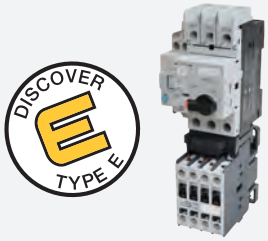

Listed as a UL 60947-4-1 Type E self-protected combination Motor Controller for circuits capable of delivering up to 50kA @ 460V.

HIGH FAULT SCCR

High fault short circuit current rating of 50kA @ 480V provides safety and reliability in high fault applications.

INTEGRATED AUXILIARY CONTACTS

Integral right side mounted auxiliary contacts, 3 power poles + 1 auxiliary, are standard on all c3controls 9A to 25A non-reversing contactors.

ADJUSTABLE CURRENT SETTING

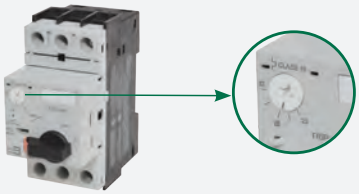

Full load current adjustment ratio enables overload relay to be set to exact FLA of motor. Provides phase protection for the motor against overload currents.

SNAP-ON ACCESSORIES

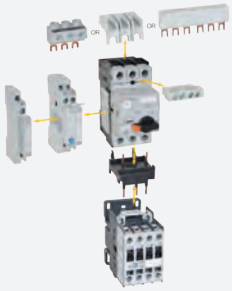

Snap-on accessories are easily installed without the use of tools, lowering assembly and installation costs.

FIND IT FAST

MPCB & Contactor Assemblies

- Certifications
- Specifications
- Dimension Drawings
- Installation Instructions
- Easy to Buy

www.c3controls.com

Motor Control Device Solutions

c3controls motor control devices are the perfect solution for manufacturers who want proper motor control and superior motor protection without having to overpay or compromise on quality. In fact, we engineer so much performance and flexibility into our products, we can deliver a remarkably better value than our competitors.

c3controls products deliver like no other.

Seamless Compatibility

Contactors, overload relays and motor protection circuit breakers are designed by c3controls to work together, with common connections and accessories, resulting in a high functioning compact starter.

LEADING THE INDUSTRY
with our compact miniature 10HP contactors and control relays. One frame size (AC or DC)—28% reduction in panel area.

Compact

The small size of c3controls motor control devices, plus features like common accessories, enable assembly into smaller control panels for lower installed costs.

Reliable Protection

Contactors provide the repeated on/off switching for the motor and are designed for motor, actuator, solenoid, and other power switching applications. Overload relays provide Trip Class 10 protection against overload and phase-loss conditions, and have ambient temperature compensation for motor protection in high temperature environments.

Ensures the protection of equipment and user.

Motor protection circuit breakers provide overload, phase-loss and short circuit protection, can be used by themselves as manual motor controllers or with contactors in group motor installations, and can achieve Type 2 coordination for optimum performance.

Type E self-protected combination manual motor controllers provide disconnecting means, branch circuit protection, motor control and motor overload protection all in a single device.

Proven

Our motor control devices are UL Listed and CE marked, meeting global standards requirements for use anywhere in the world.

NFPA 70 - National Electrical Code (NEC)

Understanding what functions are needed in your motor control circuit is critical when selecting motor control devices. Engineers benefit from the standards and codes established to ensure safety and protection to personnel and equipment.

More than just knowing the standards, c3controls, as a manufacturer of motor control products, has the application expertise you need to select the right products.

c3controls & Article 430 - Motors, Motor Circuits and Controllers

	To Supply	NEC Part	c3controls Product Series		
Motor disconnecting means		Part IX	330	630	Type E: 330 630
Motor branch-circuit, short circuit, and ground-fault protection		Part IV			Type E: 330 630
Motor circuit conductor		Part II			
Motor controller		Part VII	300/310 330	620 630	Type E: 330 630
Motor control circuits		Part VI			
Motor overload protection		Part III	320 330	620 630	Type E: 330 630
Motor		Part I			

Our motor control products align with Article 430 Part VII, Motor Controller, of the NFPA 70, the National Electrical Code.

IT'S EASY TO BUILD YOUR OWN DIRECT-ON-LINE (DOL) STARTER

Simply pick the code number from each of the sections below and combine them to build your part number.

Direct-On-Line (DOL) Starters

630 – ____ ____ ____ – ____ – ____ / ____ – ____ – ____

I *II* *III* *IV* *V* *VI* *VII* *VIII* *IX*

Example: To build one of our most popular DOL Starters (MPCB + Contactor), the part number would be **630 + II + III + IV + V + VI + VII + VIII + IX** or **630-S09D10-2D63-F11**

I. STARTER TYPE

CODE	DESCRIPTION	LIST
630	Direct-On-Line (DOL) Starter: Series 330 Motor Protection Circuit Breaker + Series 300 Contactor	$ 58.00

II. NON-REVERSING CONTACTOR (3 NORMALLY OPEN POLES)

	MAX. Ie (A)		RATINGS FOR SWITCHING AC MOTORS - AC-2, AC-3										CONTACTOR CAT. NO.	
			kW (50Hz)				HP (60Hz)							
			3 PHASE				1 PHASE			3 PHASE				
CODE	AC-3	AC-1	230V	400/415V	500V	690V	115V	230V	200V	230V	460V	575V	PREFIX	LIST
S09	9	25	2.2	4	5.5	5.5	1/2	1-1/2	3	3	5	7-1/2	300-S09N30	$ 53.00
S12	12	25	3	5.5	7.5	7.5	3/4	2	3	3	7-1/2	10	300-S12N30	$ 79.00
S18	18	32	4	7.5	10	10	1	3	5	5	10	15	300-S18N30	$ 87.00
S25	25	45	7.5	11	15	15	2	3	7-1/2	7-1/2	15	15	300-S25N30	$ 99.00
S32	32	60	9	15	18.5	18.5	3	5	10	10	20	25	300-S32N30	$130.00
S40	40	60	11	18.5	25	30	3	5	10	15	30	25	300-S40N30	$178.00

III. CONTACTOR COIL VOLTAGE CODE

AC COIL VOLTAGE CODES

VOLTAGE	12	24	48	110 / 120	208	220	230	240	277	400	400 ~ 415	480	500	550	600
50Hz	—	—	—	D	—	—	—	—	—	—	R	—	T	U	—
60Hz	—	—	—	D	L	—	—	F	P	—	—	R	—	—	T
50/60Hz	XB	XC	XJ	—	—	XAJ	XN	—	—	XAM	—	—	—	—	—

DC COIL VOLTAGE CODES

VOLTAGE	12	24	125	250	LIST
-S09 to -S25	ZB	ZC	ZQ	ZP	$ 35.00
-S32 to -S40	ZB	ZC	ZQ	ZP	$ 78.00

SOME OF OUR MOST POPULAR DOL STARTER CONFIGURATIONS

MAX. IE (A)	RATINGS FOR SWITCHING AC MOTORS* AC-2, AC-3						COIL VOLTAGE	CONTACTOR AUX. CONTACTS		MPCB CURRENT ADJUSTMENT RANGE (A)	MPCB STD. AUX. CONTACTS FRONT MOUNTED		CAT. NO.	LIST
	HP (60HZ)													
	1 PHASE		3 PHASE											
AC-3	115V	230V	200V	230V	460V	575V		NO	NC		NO	NC		
9						1/2	120V 60Hz/110V 50Hz	1	0	0.63 ~ 1.0	1	1	630-S09D10-2D10-F11	$289.00
					1/2	3/4	120V 60Hz/110V 50Hz	1	0	1.0 ~ 1.6	1	1	630-S09D10-2D16-F11	$289.00
					3/4	1	120V 60Hz/110V 50Hz	1	0	1.6 ~ 2.5	1	1	630-S09D10-2D25-F11	$289.00
		1/6		1/2	1	1-1/2	120V 60Hz/110V 50Hz	1	0		1	1		
		1/4	1/2	3/4	1-1/2	2	120V 60Hz/110V 50Hz	1	0	2.5 ~ 4.0	1	1	630-S09D10-2D40-F11	$289.00
		1/3	3/4		2	3	120V 60Hz/110V 50Hz	1	0		1	1		
	1/6	1/2	1	1	3	5	120V 60Hz/110V 50Hz	1	0	4.0 ~ 6.3	1	1	630-S09D10-2D63-F11	$298.00
	1/4						120V 60Hz/110V 50Hz	1	0		1	1		
	1/3	3/4	1-1/2	1-1/2	5	7-1/2	120V 60Hz/110V 50Hz	1	0	6.3 ~ 10	1	1	630-S09D10-2U10-F11	$304.00
	1/2	1	2	2			120V 60Hz/110V 50Hz	1	0		1	1		
				3			120V 60Hz/110V 50Hz	1	0		1	1		
		1-1/2	3				120V 60Hz/110V 50Hz	1	0	10 ~ 16	1	1	630-S09D10-2U16-F11	$320.00
12	3/4	2			7-1/2	10	120V 60Hz/110V 50Hz	1	0	10 ~ 16	1	1	630-S12D10-2U16-F11	$346.00
18				5	10		120V 60Hz/110V 50Hz	1	0	10 ~ 16	1	1	630-S18D10-2U16-F11	$354.00
	1	3	5			15	120V 60Hz/110V 50Hz	1	0	16 ~ 20	1	1	630-S18D10-2U20-F11	$369.00
25	2		7-1/2	7-1/2	15		120V 60Hz/110V 50Hz	1	0	20 ~ 25	1	1	630-S25D10-2U25-F11	$414.00
32		5	10	10	20	25	120V 60Hz/110V 50Hz	1	0	25 ~ 32	1	1	630-S32D10-2U32-F11	$445.00

*NOTE: HP and kW ratings shown in the table above are for reference. The final selection of the motor protection circuit breaker must be based on the actual motor full load current.

DIRECT-ON-LINE (DOL) STARTER PART BUILDER (CONT.)

IV. CONTACTOR AUXILIARY CONTACT CONFIGURATION

CODE	DESCRIPTION	LIST
00	Without Auxiliary Contacts (Contactors S32 - S40 only)	—
10	Normally Open*	$ 18.00
01	Normally Closed*	$ 18.00

*NOTE: Integral right side mounted on S09 to S25 contactors, front mounted on S32 to S40 contactors.

DISCOUNT SCHEDULE F

V. MOTOR PROTECTION CIRCUIT BREAKER WITH THERMAL AND MAGNETIC TRIP ELEMENTS

CODE	RATED OPER. CURRENT (A)	ADJUSTMENT RANGE (A)	MAGNETIC TRIP CURRENT (A)	ULTIMATE INTERRUPTING CURRENT (Icu) (kA)		RATINGS FOR SWITCHING AC MOTORS*								MOTOR PROTECTION CIRCUIT BREAKER CAT. NO.	LIST
						3 PHASE kW (50Hz)				3 PHASE HP (60Hz)					
				400V	480V	230V	400/415V	500V	690V	200V	230V	460V	575V		
2C16	0.16	0.10 ~ 0.16	2.1	100	100	—	—	—	0.06	—	—	—	—	330-T25S2C16	$122.00
2C25	0.25	0.16 ~ 0.25	3.3	100	100	—	0.06	0.06	0.12	—	—	—	—	330-T25S2C25	$122.00
2C40	0.40	0.25 ~ 0.40	5.2	100	100	—	0.09	0.12	0.18	—	—	—	—	330-T25S2C40	$132.00
2C63	0.63	0.40 ~ 0.63	8.2	100	100	0.06	0.12	0.25	0.25	—	—	—	1/4	330-T25S2C63	$136.00
2D10	1.0	0.63 ~ 1.0	13	100	100	0.12	0.25	0.37	0.55	—	—	1/2	1/2	330-T25S2D10	$139.00
2D16	1.6	1.0 ~ 1.6	21	100	100	0.18	0.55	0.75	1.1	1/4	1/3	3/4	1	330-T25S2D16	$139.00
2D25	2.5	1.6 ~ 2.5	33	100	100	0.37	0.75	1.1	1.5	1/2	1/2	1-1/2	1-1/2	330-T25S2D25	$139.00
2D40	4.0	2.5 ~ 4.0	52	100	100	0.75	1.5	2.2	3	3/4	1	2	3	330-T25S2D40	$139.00
2D63	6.3	4.0 ~ 6.3	82	100	100	1.1	2.2	3	4	1-1/2	1-1/2	3	5	330-T25S2D63	$148.00
2U10	10	6.3 ~ 10	130	100	42	2.2	4	4	7.5	3	3	7-1/2	10	330-T25S2U10	$154.00
2U16	16	10 ~ 16	208	50	10	3.7	7.5	9	12.5	5	5	10	15	330-T25S2U16	$170.00
2U20	20	16 ~ 20	260	50	10	3.7	9	12.5	15	5	7-1/2	15	20	330-T25S2U20	$185.00
2U25	25	20 ~ 25	325	50	10	5.5	12.5	15	22	7-1/2	7-1/2	15	20	330-T25S2U25	$218.00
2U32	32	25 ~ 32	416	50	10	7.5	15	18.5	30	10	10	20	25	330-T25S2U32	$218.00

*NOTE: HP and kW ratings shown in the table above are for reference. The final selection of the motor protection circuit breaker must be based on the actual motor full load current.

VI. MOTOR PROTECTION CIRCUIT BREAKER STANDARD AUXILIARY CONTACT CONFIGURATION (FRONT MOUNTED)

CODE	DESCRIPTION	CAT. NO.	LIST
(Blank)	None	—	—
F11	1NO + 1NC Std. Auxiliary Contacts	330-FA11S25	$ 21.00

VII. MOTOR PROTECTION CIRCUIT BREAKER STANDARD AUXILIARY CONTACT CONFIGURATION (LEFT SIDE MOUNTED)

CODE	DESCRIPTION	CAT. NO.	LIST
(Blank)	None	—	—
S11	1NO + 1NC Std. Auxiliary Contacts	330-SA11S25	$ 21.00
S20	2NO Std. Auxiliary Contacts	330-SA20S25	$ 21.00

VIII. MOTOR PROTECTION CIRCUIT BREAKER TRIP INDICATING AUXILIARY CONTACT CONFIGURATION (LEFT SIDE MOUNTED)

CODE	DESCRIPTION	CAT. NO.	LIST
(Blank)	None	—	—
T22	1NO + 1NC Overload and 1NO + 1NC Short Circuit Trip Indicating Auxiliary Contacts	330-STA22S25	$ 57.00

IX. MOTOR PROTECTION CIRCUIT BREAKER LINE SIDE TERMINAL BARRIER

CODE	DESCRIPTION	CAT. NO.	LIST
(Blank)	None	—	—
L	Line Side Terminal Barrier	330-LSTBS25	$ 54.00

Direct-On-Line (DOL) Starters

c3controls Series 630 Direct-On-Line (DOL) Starters are assemblies of a Series 330 Motor Protection Circuit Breaker and a Series 300 Contactor. The motor protection circuit breaker includes both thermal and magnetic trip elements for overload and short circuit protection of the motor, and motor branch circuit components including the conductors. The contactor provides the repeated ON/OFF switching for the motor. These assemblies are ideal for use in multi-motor installations where panel space is at a premium and device modularity is required to satisfy virtually any application requirement. Small size, IP20 guarded terminals with dual terminal markings, and shared accessories will help reduce your total installed costs and enhance the features and performance of your equipment. Just look and see what our Series 630 assembled starters have to offer.

Product features include:

- The Line Side Terminal Barrier accessory snaps on and installs without the use of tools.
- Removable and replaceable identification marker, standard on all c3controls Series 630 DOL Starters, simplifies troubleshooting in panels with many devices.
- Modular design and a wide variety of contactor and motor protection circuit breaker accessories including standard auxiliary contacts, trip indicating auxiliary contacts, shunt release modules and surge suppressors.
- Many wiring accessories such as commoning links and feeder terminals for easy distribution of power to multiple starters.
- Snap-on accessories are easily installed without the use of tools, lowering assembly and installation costs.
- Compact size – only 45mm (1-49/64") wide up to 20HP @ 460V (15kW @ 400V) to minimize the amount of panel area required.
- The "ON/OFF" manual operator enables individual motor circuits to be easily isolated without having to disconnect all of the circuits in a control panel.
- Operators can be padlocked in the "OFF" position (max. one 4.9mm [3/16"] padlock) preventing the motor protection circuit breaker from being turned "ON" when the equipment is being serviced.
- Visible trip indication for fast identification of which device tripped in a control panel where multiple starters with motor protection circuit breakers are installed.
- Trip indicating auxiliary contacts can be used to identify the trip cause - overload (1 NO and 1 NC) or short circuit (1 NO and 1 NC), to help determine the type of service/maintenance that may be required.
- IP20 guarded terminals with dual terminal markings prevent accidental contact with live parts.
- The contactor and motor protection circuit breaker are assembled with a contactor-circuit breaker link module, enabling the starter to be installed on a single 35mm DIN rail. Installation is fast and the starter can be removed from the DIN rail easily without tools.
- Unobstructed access to the two contactor coil terminals on the load-side of the starter makes control circuit wiring simple.
- Designed for optimum performance in multi-motor installations, and can achieve Type 2 coordination in circuits capable of delivering up to 50kA at 460V.
- All Series 300 Contactor and Series 330 Motor Protection Circuit Breaker features.

UNIQUE PRODUCT FEATURES

Space Savings

Control panel sizes can be reduced because the short circuit protection provided by the Series 330 Motor Protection Circuit Breaker enables individual motor branch circuit fuses or circuit breakers and overload relays to be eliminated.

Labor Savings

Starter assembly and installation of the starter assemblies in Group Motor Installations is easier and faster with the use of connection modules between the contactor and motor protection circuit breaker and commoning links to conveniently distribute power to multiple starter assemblies. In addition to labor savings, the components look nice too, and provide IP20 protection to guard against accidental contact with live parts.

Cost Savings

Smaller size enclosures, reduced wiring, and DIN rail installation all combine to provide a lower cost control panel with superior performance in normal operating conditions as well as in overload or short circuit conditions.

Type E Direct-On-Line (DOL) Starters

Traditionally, motor short circuit protection has been provided by fuses or molded case circuit breakers that are often cumbersome and costly. Type E has proven to be a simple and cost-effective alternative, providing all the protection required for your motor circuit. As you search for ways to reduce panel size, expense and total cost of installation, Discover Type E and simplify your motor circuit.

Product features include:

- A Type E self-protected combination motor controller integrates protective functions into a single unit suitable for use in circuits delivering up to 50kA at 480V.
- Type E devices provide motor disconnecting means, branch short circuit and ground fault protection, motor control and motor overload protection, reducing size and eliminating upstream fuses or circuit breakers for a motor circuit.
- Modular design and a wide variety of contactor and motor protection circuit breaker accessories including standard auxiliary contacts, trip indicating auxiliary contacts, and line side terminal barriers.
- Snap-on accessories are easily installed without the use of tools, lowering assembly and installation costs.
- Trip indicating auxiliary contacts can be used to identify the trip cause – overload (1 NO and 1 NC) or short circuit (1 NO and 1 NC), to help determine the type of service/ maintenance that may be required.
- Trip Class 10 overload protection.
- All Series 300 Contactor, Series 330 Motor Protection Circuit Breaker, and standard Series 630 DOL Starter features.

UNIQUE PRODUCT FEATURES

DISCOVER E TYPE

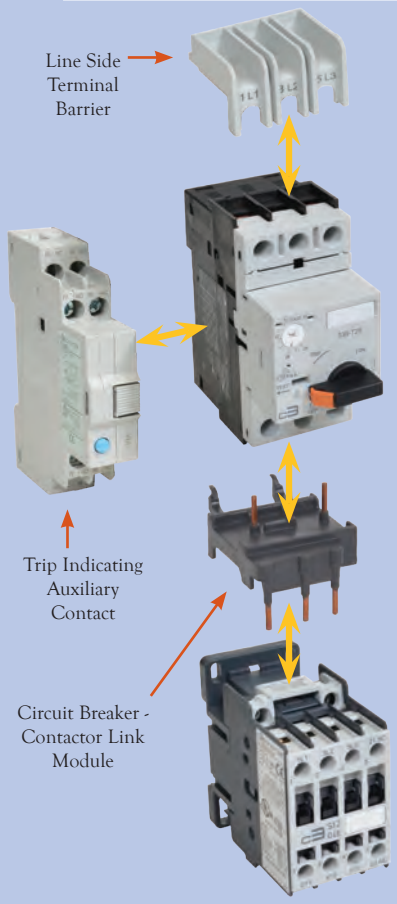

The trip indicating auxiliary contact accessory distinguishes between overload and short circuit fault conditions. This enhances functionality, minimizes downtime and reduces cost after a fault because the fault can be easily identified.

Trip indicating auxiliary and line side terminal barrier accessories are required to construct a UL 60947-4-1 combination motor controller.

Selecting The Components Needed To Configure A Type E or Type F Combination Motor Controller

c3controls makes it easy to identify and select the components needed to configure our Series 630 Direct-On-Line (DOL) Starters listed as a UL 60947-4-1 self-protected combination motor controller.

The Type E and Type F parts configurator charts on pages 10-17 of this catalog are broken down by motor voltage, therefore you will need to know your Motor Voltage and Motor Size prior to configuring a Type E or Type F Direct-On-Line (DOL) Starter.

1. Select your appropriate Motor Voltage: 200V, 240V, 480Y/277V or 600Y/347V. Motor Voltages are located at the top of pages 10-17 for easy reference.
2. Follow the step-by-step parts configurator by simply choosing a code from each of the sections and create the exact product match for your needs. If a code is pre-filled, that means there is no option for that part, but you MUST include that code in your part builder number. Don't forget to include hyphens and slashes where indicated.
3. The motor protection circuit breaker options are broken down by type of contactor and motor size. Select the appropriate motor protection circuit breaker by choosing from the options listed below the Motor Size.
4. Type E self-protected combination motor controllers as fully assembled Direct-On-Line (DOL) Starters are available in up to 10A relay ranges. Type F combination motor controllers as fully assembled Direct-On-Line (DOL) Starters are available in up to 32A.

Our complete line of Type E and Type F Direct-On-Line (DOL) Starters can be found on our website at www.c3controls.com, and have the same easy step-by-step configurator to help you create the exact product match for your needs.

IT'S EASY TO BUILD YOUR OWN TYPE E DIRECT-ON-LINE (DOL) STARTER

Simply pick the code number from each of the sections below and combine them to build your part number.

Type E Direct-On-Line (DOL) Starters (FOR MOTOR VOLTAGE 200V)

630 – ____ ____ ____ – ____ – ____ / ____ – T22 – L
I II III IV V VI VII VIII IX

Example: To build one of our most popular Type E DOL Starters (MPCB + Contactor), the part number would be 630 + II + III + IV + V + VI + VII + T22 + L
or 630-S09D10-2D63-F11-T22-L

I. STARTER TYPE

CODE	DESCRIPTION	LIST
630	Type E Direct On-Line (DOL) Starter: Series 330 Motor Protection Circuit Breaker + Series 300 Contactor	$ 58.00

II. NON-REVERSING CONTACTOR (3 NORMALLY OPEN POLES)

CODE	MAX. Ie (A) AC-3	MOTOR SIZE @ 3 PHASE 200V < 1/4HP	1/3HP	1/2HP	1HP	1-1/2HP	3HP	5HP	7-1/2HP	10HP	CONTACTOR CAT. NO. PREFIX	LIST
S09	9	✔	✔	✔	✔	✔	✔	—	—	—	300-S09N30	$ 53.00
S18	18	—	—	—	—	—	—	✔	—	—	300-S18N30	$ 87.00
S25	25	—	—	—	—	—	—	✔	—	—	300-S25N30	$ 99.00
S32	32	—	—	—	—	—	—	—	✔	—	300-S32N30	$130.00
S40	40	—	—	—	—	—	—	—	—	✔	300-S40N30	$178.00

III. CONTACTOR COIL VOLTAGE CODE

AC COIL VOLTAGE CODES

VOLTAGE	12	24	48	110 / 120	208	220	230	240	277	400	400 ~ 415	480	500	550	600
50Hz	—	—	—	D	—	—	—	—	—	—	R	—	T	U	—
60Hz	—	—	—	D	L	—	—	F	P	—	—	R	—	—	T
50/60Hz	XB	XC	XJ	—	—	XAJ	XN	—	—	XAM	—	—	—	—	—

DC COIL VOLTAGE CODES

VOLTAGE	12	24	125	250	LIST
-S09 to -S25	ZB	ZC	ZQ	ZP	$ 35.00
-S32 to -S40	ZB	ZC	ZQ	ZP	$ 78.00

IV. CONTACTOR AUXILIARY CONTACT CONFIGURATION

CODE	DESCRIPTION	LIST
00	Without Auxiliary Contacts (Contactors S32 to S40 only)	—
10	Normally Open*	$ 18.00
01	Normally Closed*	$ 18.00

*NOTE: Integral right side mounted on S09 to S25 contactors, front mounted on S32 to S40 contactors.

DISCOVER E TYPE E

DISCOUNT SCHEDULE F

SEE OPPOSITE PAGE FOR PART BUILDER CHARTS V-IX.

TYPE E DIRECT-ON-LINE (DOL) STARTER PART BUILDER (CONT.)

V. MOTOR PROTECTION CIRCUIT BREAKER WITH THERMAL AND MAGNETIC TRIP ELEMENTS

CODE	ADJUSTMENT RANGE (A)	MAGNETIC TRIP CURRENT (A)	ULTIMATE INTERRUPTING CURRENT (Icu) (kA) 400V	480V	MOTOR PROTECTION CIRCUIT BREAKER CAT. NO.	LIST
FOR CONTACTORS S09 & MOTOR SIZE <1/4HP						
2C16	0.10 ~ 0.16	2.1	100	100	330-T25S2C16	$122.00
2C25	0.16 ~ 0.25	3.3	100	100	330-T25S2C25	$122.00
2C40	0.25 ~ 0.40	5.2	100	100	330-T25S2C40	$132.00
2C63	0.40 ~ 0.63	8.2	100	100	330-T25S2C63	$136.00
2D10	0.63 ~ 1.0	13	100	100	330-T25S2D10	$139.00
FOR CONTACTORS S09 & MOTOR SIZE 1/3HP						
2D16	1.0 ~ 1.6	21	100	100	330-T25S2D16	$139.00
FOR CONTACTORS S09 & MOTOR SIZE 1/2HP						
2D25	1.6 ~ 2.5	33	100	100	330-T25S2D25	$139.00
FOR CONTACTORS S09 & MOTOR SIZE 1HP						
2D40	2.5 ~ 4.0	52	100	100	330-T25S2D40	$139.00
FOR CONTACTORS S09 & MOTOR SIZE 1-1/2HP						
2D63	4.0 ~ 6.3	82	100	100	330-T25S2D63	$148.00
FOR CONTACTORS S09 & MOTOR SIZE 3HP						
2U10	6.3 ~ 10	130	100	42	330-T25S2U10	$154.00
FOR CONTACTORS S18 & MOTOR SIZE 5HP						
2U16*	10 ~ 16	208	50	10	330-T25S2U16	$170.00
FOR CONTACTORS S25 & MOTOR SIZE 5HP						
2U20*	16 ~ 20	260	50	10	330-T25S2U20	$185.00
FOR CONTACTORS S32 & MOTOR SIZE 7-1/2HP						
2U25*	20 ~ 25	325	50	10	330-T25S2U25	$218.00
2U32*	25 ~ 32	416	50	10	330-T25S2U32	$218.00
FOR CONTACTORS S40 & MOTOR SIZE 10HP						
2U32*	25 ~ 32	416	50	10	330-T25S2U32	$218.00

*NOTE: Type F combination motor controller configuration only.

VI. MOTOR PROTECTION CIRCUIT BREAKER STANDARD AUXILIARY CONTACT CONFIGURATION (FRONT MOUNTED)

CODE	DESCRIPTION	CAT. NO.	LIST
(Blank)	None	—	—
F11	1NO + 1NC Std. Auxiliary Contacts	330-FA11S25	$ 21.00

VII. MOTOR PROTECTION CIRCUIT BREAKER STANDARD AUXILIARY CONTACT CONFIGURATION (LEFT SIDE MOUNTED)

CODE	DESCRIPTION	CAT. NO.	LIST
(Blank)	None	—	—
S11	1NO + 1NC Std. Auxiliary Contacts	330-SA11S25	$ 21.00
S20	2NO Std. Auxiliary Contacts	330-SA20S25	$ 21.00

VIII. MOTOR PROTECTION CIRCUIT BREAKER TRIP INDICATING AUXILIARY CONTACT CONFIGURATION (LEFT SIDE MOUNTED)

CODE	DESCRIPTION	CAT. NO.	LIST
T22	1NO + 1NC Overload and 1NO + 1NC Short Circuit Trip Indicating Auxiliary Contacts	330-STA22S25	$ 57.00

IX. MOTOR PROTECTION CIRCUIT BREAKER LINE SIDE TERMINAL BARRIER

CODE	DESCRIPTION	CAT. NO.	LIST
L	Line Side Terminal Barrier	330-LSTBS25	$ 54.00

SOME OF OUR MOST POPULAR TYPE E DOL STARTER CONFIGURATIONS

MAX. LE (A) AC-3	3Φ HP @200V AC	COIL VOLTAGE	CONTACTOR AUXILIARY CONTACTS NO	NC	CURRENT ADJUSTMENT RANGE (A)	MPCB STANDARD AUXILIARY CONTACTS, FRONT MOUNTED NO	NC	MPCB TRIP INDICATING AUXILIARY CONTACTS, LEFT SIDE MOUNTED NO	NC	CATALOG NUMBER	LIST
9	1-1/2	120V 60Hz/110V 50Hz	1	0	4.0 ~ 6.3	1	1	2	2	630-S09D10-2D63-F11-T22-L	$409.00
9	3	120V 60Hz/110V 50Hz	1	0	6.3 ~ 10	1	1	2	2	630-S09D10-2U10-F11-T22-L	$415.00
25	5	120V 60Hz/110V 50Hz	1	0	16 ~ 20	1	1	2	2	630-S25D10-2U20-F11-T22-L	$492.00
32	7-1/2	120V 60Hz/110V 50Hz	0	0	20 ~ 25	1	1	2	2	630-S32D00-2U25-F11-T22-L	$538.00

IT'S EASY TO BUILD YOUR OWN TYPE E DIRECT-ON-LINE (DOL) STARTER

Simply pick the code number from each of the sections below and combine them to build your part number.

Type E Direct-On-Line (DOL) Starters (FOR MOTOR VOLTAGE 240V)

630 – ____ ____ ____ – ____ – ____ / ____ – T22 – L
I II III IV V VI VII VIII IX

Example: To build one of our most popular Type E DOL Starters (MPCB + Contactor), the part number would be 630 + II + III + IV + V + VI + VII + T22 + L
or 630-S09D10-2D63-F11-T22-L

I. STARTER TYPE

CODE	DESCRIPTION	LIST
630	Type E Direct-On-Line (DOL) Starter: Series 330 Motor Protection Circuit Breaker + Series 300 Contactor	$ 58.00

II. NON-REVERSING CONTACTOR (3 NORMALLY OPEN POLES)

CODE	MAX. Ie (A) AC-3	MOTOR SIZE @ 240V 3 PHASE < 1/4HP	1/3HP	1/2HP	1HP	1-1/2HP	3HP	5HP	7-1/2HP	10HP	CONTACTOR CAT. NO. PREFIX	LIST
S09	9	✔	✔	✔	✔	✔	✔	—	—	—	300-S09N30	$ 53.00
S18	18	—	—	—	—	—	—	✔	—	—	300-S18N30	$ 87.00
S25	25	—	—	—	—	—	—	—	✔	—	300-S25N30	$ 99.00
S32	32	—	—	—	—	—	—	—	✔	—	300-S32N30	$130.00
S40	40	—	—	—	—	—	—	—	—	✔	300-S40N30	$178.00

III. CONTACTOR COIL VOLTAGE CODE

AC COIL VOLTAGE CODES

VOLTAGE	12	24	48	110 / 120	208	220	230	240	277	400	400 ~ 415	480	500	550	600
50Hz	—	—	—	D	—	—	—	—	—	—	R	—	T	U	—
60Hz	—	—	—	D	L	—	—	F	P	—	—	R	—	—	T
50/60Hz	XB	XC	XJ	—	—	XAJ	XN	—	—	XAM	—	—	—	—	—

DC COIL VOLTAGE CODES

VOLTAGE	12	24	125	250	LIST
-S09 to -S25	ZB	ZC	ZQ	ZP	$ 35.00
-S32 to -S40	ZB	ZC	ZQ	ZP	$ 78.00

IV. CONTACTOR AUXILIARY CONTACT CONFIGURATION

CODE	DESCRIPTION	LIST
00	Without Auxiliary Contacts (Contactors S32 to S40 only)	—
10	Normally Open*	$ 18.00
01	Normally Closed*	$ 18.00

*NOTE: Integral right side mounted on S09 to S25 contactors, front mounted on S32 to S40 contactors.

DISCOVER E TYPE E

DISCOUNT SCHEDULE F

SEE OPPOSITE PAGE FOR PART BUILDER CHARTS V-IX.

TYPE E DIRECT-ON-LINE (DOL) STARTER PART BUILDER (CONT.)

V. MOTOR PROTECTION CIRCUIT BREAKER WITH THERMAL AND MAGNETIC TRIP ELEMENTS

CODE	ADJUSTMENT RANGE (A)	MAGNETIC TRIP CURRENT (A)	ULTIMATE INTERRUPTING CURRENT (Icu) (kA) 400V	480V	MOTOR PROTECTION CIRCUIT BREAKER CAT. NO.	LIST
FOR CONTACTORS S09 & MOTOR SIZE <1/4HP						
2C16	0.10 ~ 0.16	2.1	100	100	330-T25S2C16	$122.00
2C25	0.16 ~ 0.25	3.3	100	100	330-T25S2C25	$122.00
2C40	0.25 ~ 0.40	5.2	100	100	330-T25S2C40	$132.00
2C63	0.40 ~ 0.63	8.2	100	100	330-T25S2C63	$136.00
2D10	0.63 ~ 1.0	13	100	100	330-T25S2D10	$139.00
FOR CONTACTORS S09 & MOTOR SIZE 1/3HP						
2D16	1.0 ~ 1.6	21	100	100	330-T25S2D16	$139.00
FOR CONTACTORS S09 & MOTOR SIZE 1/2HP						
2D25	1.6 ~ 2.5	33	100	100	330-T25S2D25	$139.00
FOR CONTACTORS S09 & MOTOR SIZE 1HP						
2D40	2.5 ~ 4.0	52	100	100	330-T25S2D40	$139.00
FOR CONTACTORS S09 & MOTOR SIZE 1-1/2HP						
2D63	4.0 ~ 6.3	82	100	100	330-T25S2D63	$148.00
FOR CONTACTORS S09 & MOTOR SIZE 3HP						
2U10	6.3 ~ 10	130	100	42	330-T25S2U10	$154.00
FOR CONTACTORS S18 & MOTOR SIZE 5HP						
2U16*	10 ~ 16	208	50	10	330-T25S2U16	$170.00
FOR CONTACTORS S25 & MOTOR SIZE 7-1/2HP						
2U20*	16 ~ 20	260	50	10	330-T25S2U20	$185.00
FOR CONTACTORS S32 & MOTOR SIZE 7-1/2HP						
2U25*	20 ~ 25	325	50	10	330-T25S2U25	$218.00
2U32*	25 ~ 32	416	50	10	330-T25S2U32	$218.00
FOR CONTACTORS S40 & MOTOR SIZE 10HP						
2U32*	25 ~ 32	416	50	10	330-T25S2U32	$218.00

*NOTE: Type F combination motor controller configuration only.

VI. MOTOR PROTECTION CIRCUIT BREAKER STANDARD AUXILIARY CONTACT CONFIGURATION (FRONT MOUNTED)

CODE	DESCRIPTION	CAT. NO.	LIST
(Blank)	None	—	—
F11	1NO + 1NC Std. Auxiliary Contacts	330-FA11S25	$ 21.00

VII. MOTOR PROTECTION CIRCUIT BREAKER STANDARD AUXILIARY CONTACT CONFIGURATION (LEFT SIDE MOUNTED)

CODE	DESCRIPTION	CAT. NO.	LIST
(Blank)	None	—	—
S11	1NO + 1NC Std. Auxiliary Contacts	330-SA11S25	$ 21.00
S20	2NO Std. Auxiliary Contacts	330-SA20S25	$ 21.00

VIII. MOTOR PROTECTION CIRCUIT BREAKER TRIP INDICATING AUXILIARY CONTACT CONFIGURATION (LEFT SIDE MOUNTED)

CODE	DESCRIPTION	CAT. NO.	LIST
T22	1NO + 1NC Overload and 1NO + 1NC Short Circuit Trip Indicating Auxiliary Contacts	330-STA22S25	$ 57.00

IX. MOTOR PROTECTION CIRCUIT BREAKER LINE SIDE TERMINAL BARRIER

CODE	DESCRIPTION	CAT. NO.	LIST
L	Line Side Terminal Barrier	330-LSTBS25	$ 54.00

SOME OF OUR MOST POPULAR TYPE E DOL STARTER CONFIGURATIONS

MAX. LE (A) AC-3	3Φ HP @240V AC	COIL VOLTAGE	CONTACTOR AUXILIARY CONTACTS NO	NC	CURRENT ADJUSTMENT RANGE (A)	MPCB STANDARD AUXILIARY CONTACTS, FRONT MOUNTED NO	NC	MPCB TRIP INDICATING AUXILIARY CONTACTS, LEFT SIDE MOUNTED NO	NC	CATALOG NUMBER	LIST
9	1-1/2	120V 60Hz/110V 50Hz	1	0	4.0 ~ 6.3	1	1	2	2	630-S09D10-2D63-F11-T22-L	$409.00
9	3	120V 60Hz/110V 50Hz	1	0	6.3 ~ 10	1	1	2	2	630-S09D10-2U10-F11-T22-L	$415.00
18	5	120V 60Hz/110V 50Hz	1	0	10 ~ 16	1	1	2	2	630-S18D10-2U16-F11-T22-L	$465.00
32	7-1/2	120V 60Hz/110V 50Hz	0	0	20 ~ 25	1	1	2	2	630-S32D00-2U25-F11-T22-L	$538.00

IT'S EASY TO BUILD YOUR OWN TYPE E DIRECT-ON-LINE (DOL) STARTER

Simply pick the code number from each of the sections below and combine them to build your part number.

Type E Direct-On-Line (DOL) Starters (FOR MOTOR VOLTAGE 480Y/277V)

630 – ____ ____ ____ – ____ – ____ / ____ – T22 – L

I II III IV V VI VII VIII IX

Example: To build one of our most popular Type E DOL Starters (MPCB + Contactor), the part number would be **630 + II + III + IV + V + VI + VII + T22 + L** or **630-S09D10-2D63-F11-T22-L**

I. STARTER TYPE

CODE	DESCRIPTION	LIST
630	Type E Direct-On-Line (DOL) Starter: Series 330 Motor Protection Circuit Breaker + Series 300 Contactor	$ 58.00

II. NON-REVERSING CONTACTOR (3 NORMALLY OPEN POLES)

CODE	MAX. Ie (A) AC-3	MOTOR SIZE @ 480V 3 PHASE < 1/2HP	1/2HP	3/4HP	1-1/2HP	2HP	3HP	5HP	10HP	15HP	20HP	CONTACTOR CAT. NO. PREFIX	LIST
S09	9	✔	✔	✔	✔	✔	✔	✔	—	—	—	300-S09N30	$ 53.00
S18	18	—	—	—	—	—	—	—	✔	—	—	300-S18N30	$ 87.00
S25	25	—	—	—	—	—	—	—	—	✔	—	300-S25N30	$ 99.00
S32	32	—	—	—	—	—	—	—	—	✔	—	300-S32N30	$130.00
S40	40	—	—	—	—	—	—	—	—	—	✔	300-S40N30	$178.00

III. CONTACTOR COIL VOLTAGE CODE

AC COIL VOLTAGE CODES

VOLTAGE	12	24	48	110 / 120	208	220	230	240	277	400	400 ~ 415	480	500	550	600
50Hz	—	—	—	D	—	—	—	—	—	—	R	—	T	U	—
60Hz	—	—	—	D	L	—	—	F	P	—	—	R	—	—	T
50/60Hz	XB	XC	XJ	—	—	XAJ	XN	—	—	XAM	—	—	—	—	—

DC COIL VOLTAGE CODES

VOLTAGE	12	24	125	250	LIST
-S09 to -S25	ZB	ZC	ZQ	ZP	$ 35.00
-S32 to -S40	ZB	ZC	ZQ	ZP	$ 78.00

IV. CONTACTOR AUXILIARY CONTACT CONFIGURATION

CODE	DESCRIPTION	LIST
00	Without Auxiliary Contacts (Contactors S32 to S40 only)	—
10	Normally Open*	$ 18.00
01	Normally Closed*	$ 18.00

*NOTE: Integral right side mounted on S09 to S25 contactors, front mounted on S32 to S40 contactors.

DISCOVER E TYPE E

DISCOUNT SCHEDULE F

SEE OPPOSITE PAGE FOR PART BUILDER CHARTS V-IX.

TYPE E DIRECT-ON-LINE (DOL) STARTER PART BUILDER (CONT.)

V. MOTOR PROTECTION CIRCUIT BREAKER WITH THERMAL AND MAGNETIC TRIP ELEMENTS

CODE	ADJUSTMENT RANGE (A)	MAGNETIC TRIP CURRENT (A)	ULTIMATE INTERRUPTING CURRENT (Icu) (kA) 400V	480V	MOTOR PROTECTION CIRCUIT BREAKER CAT. NO.	LIST
FOR CONTACTORS S09 & MOTOR SIZE <1/2HP						
2C16	0.10 ~ 0.16	2.1	100	100	330-T25S2C16	$122.00
2C25	0.16 ~ 0.25	3.3	100	100	330-T25S2C25	$122.00
2C40	0.25 ~ 0.40	5.2	100	100	330-T25S2C40	$132.00
2C63	0.40 ~ 0.63	8.2	100	100	330-T25S2C63	$136.00
FOR CONTACTORS S09 & MOTOR SIZE 1/2HP						
2D10	0.63 ~ 1.0	13	100	100	330-T25S2D10	$139.00
FOR CONTACTORS S09 & MOTOR SIZE 3/4HP						
2D16	1.0 ~ 1.6	21	100	100	330-T25S2D16	$139.00
FOR CONTACTORS S09 & MOTOR SIZE 1-1/2HP						
2D25	1.6 ~ 2.5	33	100	100	330-T25S2D25	$139.00
FOR CONTACTORS S09 & MOTOR SIZE 2HP						
2D40	2.5 ~ 4.0	52	100	100	330-T25S2D40	$139.00
FOR CONTACTORS S09 & MOTOR SIZE 3HP						
2D63	4.0 ~ 6.3	82	100	100	330-T25S2D63	$148.00
FOR CONTACTORS S09 & MOTOR SIZE 5HP						
2U10	6.3 ~ 10	130	100	42	330-T25S2U10	$154.00
FOR CONTACTORS S18 & MOTOR SIZE 10HP						
2U16*	10 ~ 16	208	50	10	330-T25S2U16	$170.00
FOR CONTACTORS S25 & MOTOR SIZE 15HP						
2U20*	16 ~ 20	260	50	10	330-T25S2U20	$185.00
FOR CONTACTORS S32 & MOTOR SIZE 15HP						
2U25*	20 ~ 25	325	50	10	330-T25S2U25	$218.00
2U32*	25 ~ 32	416	50	10	330-T25S2U32	$218.00
FOR CONTACTORS S40 & MOTOR SIZE 20HP						
2U32*	25 ~ 32	416	50	10	330-T25S2U32	$218.00

*NOTE: Type F combination motor controller configuration only.

VI. MOTOR PROTECTION CIRCUIT BREAKER STANDARD AUXILIARY CONTACT CONFIGURATION (FRONT MOUNTED)

CODE	DESCRIPTION	CAT. NO.	LIST
(Blank)	None	—	—
F11	1NO + 1NC Std. Auxiliary Contacts	330-FA11S25	$ 21.00

VII. MOTOR PROTECTION CIRCUIT BREAKER STANDARD AUXILIARY CONTACT CONFIGURATION (LEFT SIDE MOUNTED)

CODE	DESCRIPTION	CAT. NO.	LIST
(Blank)	None	—	—
S11	1NO + 1NC Std. Auxiliary Contacts	330-SA11S25	$ 21.00
S20	2NO Std. Auxiliary Contacts	330-SA20S25	$ 21.00

VIII. MOTOR PROTECTION CIRCUIT BREAKER TRIP INDICATING AUXILIARY CONTACT CONFIGURATION (LEFT SIDE MOUNTED)

CODE	DESCRIPTION	CAT. NO.	LIST
T22	1NO + 1NC Overload and 1NO + 1NC Short Circuit Trip Indicating Auxiliary Contacts	330-STA22S25	$ 57.00

IX. MOTOR PROTECTION CIRCUIT BREAKER LINE SIDE TERMINAL BARRIER

CODE	DESCRIPTION	CAT. NO.	LIST
L	Line Side Terminal Barrier	330-LSTBS25	$ 54.00

SOME OF OUR MOST POPULAR TYPE E DOL STARTER CONFIGURATIONS

MAX. LE (A) AC-3	3Φ HP @480V AC	COIL VOLTAGE	CONTACTOR AUXILIARY CONTACTS NO	NC	CURRENT ADJUSTMENT RANGE (A)	MPCB STANDARD AUXILIARY CONTACTS, FRONT MOUNTED NO	NC	MPCB TRIP INDICATING AUXILIARY CONTACTS, LEFT SIDE MOUNTED NO	NC	CATALOG NUMBER	LIST
9	3	120V 60Hz/110V 50Hz	1	0	4.0 ~ 6.3	1	1	2	2	630-S09D10-2D63-F11-T22-L	$409.00
9	5	120V 60Hz/110V 50Hz	1	0	6.3 ~ 10	1	1	2	2	630-S09D10-2U10-F11-T22-L	$415.00
18	10	120V 60Hz/110V 50Hz	1	0	10 ~ 16	1	1	2	2	630-S18D10-2U16-F11-T22-L	$465.00
32	15	120V 60Hz/110V 50Hz	0	0	20 ~ 25	1	1	2	2	630-S32D00-2U25-F11-T22-L	$538.00

IT'S EASY TO BUILD YOUR OWN TYPE E DIRECT-ON-LINE (DOL) STARTER

Simply pick the code number from each of the sections below and combine them to build your part number.

Type E Direct-On-Line (DOL) Starters (FOR MOTOR VOLTAGE 600Y/347V)

630 – ____ ____ ____ – ____ – ____ / ____ – **T22** – **L**

I *II* *III* *IV* *V* *VI* *VII* *VIII* *IX*

Example: To build one of our most popular Type E DOL Starters (MPCB + Contactor), the part number would be **630 + II + III + IV + V + VI + VII + T22 + L**
or **630-S09D10-2D63-F11-T22-L**

I. STARTER TYPE

CODE	DESCRIPTION	LIST
630	Type E Direct-On-Line (DOL) Starter: Series 330 Motor Protection Circuit Breaker + Series 300 Contactor	$ 58.00

II. NON-REVERSING CONTACTOR (3 NORMALLY OPEN POLES)

CODE	MAX. Ie (A) AC-3	MOTOR SIZE @ 600V 3 PHASE < 1/4HP	1/4HP	1/2HP	1HP	1-1/2HP	3HP	5HP	7-1/2HP	15HP	20HP	25HP	CONTACTOR CAT. NO. PREFIX	LIST
S09	9	✔	✔	✔	✔	✔	✔	✔	✔	—	—	—	300-S09N30	$ 53.00
S18	18	—	—	—	—	—	—	—	—	✔	—	—	300-S18N30	$ 87.00
S25	25	—	—	—	—	—	—	—	—	✔	—	—	300-S25N30	$ 99.00
S32	32	—	—	—	—	—	—	—	—	—	✔	—	300-S32N30	$130.00
S40	40	—	—	—	—	—	—	—	—	—	—	✔	300-S40N30	$178.00

III. CONTACTOR COIL VOLTAGE CODE

AC COIL VOLTAGE CODES

VOLTAGE	12	24	48	110 / 120	208	220	230	240	277	400	400 ~ 415	480	500	550	600
50Hz	—	—	—	D	—	—	—	—	—	—	R	—	T	U	—
60Hz	—	—	—	D	L	—	—	F	P	—	—	R	—	—	T
50/60Hz	XB	XC	XJ	—	—	XAJ	XN	—	—	XAM	—	—	—	—	—

DC COIL VOLTAGE CODES

VOLTAGE	12	24	125	250	LIST
-S09 to -S25	ZB	ZC	ZQ	ZP	$ 35.00
-S32 to -S40	ZB	ZC	ZQ	ZP	$ 78.00

IV. CONTACTOR AUXILIARY CONTACT CONFIGURATION

CODE	DESCRIPTION	LIST
00	Without Auxiliary Contacts (Contactors S32 to S40 only)	—
10	Normally Open*	$ 18.00
01	Normally Closed*	$ 18.00

*NOTE: Integral right side mounted on S09 to S25 contactors, front mounted on S32 to S40 contactors.

DISCOVER E TYPE E

DISCOUNT SCHEDULE F

SEE OPPOSITE PAGE FOR PART BUILDER CHARTS V-IX.

TYPE E DIRECT-ON-LINE (DOL) STARTER PART BUILDER (CONT.)

V. MOTOR PROTECTION CIRCUIT BREAKER WITH THERMAL AND MAGNETIC TRIP ELEMENTS

CODE	ADJUSTMENT RANGE (A)	MAGNETIC TRIP CURRENT (A)	ULTIMATE INTERRUPTING CURRENT (Icu) (kA) 400V	480V	MOTOR PROTECTION CIRCUIT BREAKER CAT. NO.	LIST
FOR CONTACTORS S09 & MOTOR SIZE <1/4HP						
2C16	0.10 ~ 0.16	2.1	100	100	330-T25S2C16	$122.00
2C25	0.16 ~ 0.25	3.3	100	100	330-T25S2C25	$122.00
2C63	0.40 ~ 0.63	8.2	100	100	330-T25S2C63	$136.00
FOR CONTACTORS S09 & MOTOR SIZE 1/4HP						
2C40	0.25 ~ 0.40	5.2	100	100	330-T25S2C40	$132.00
FOR CONTACTORS S09 & MOTOR SIZE 1/2HP						
2D10	0.63 ~ 1.0	13	100	100	330-T25S2D10	$139.00
FOR CONTACTORS S09 & MOTOR SIZE 1HP						
2D16	1.0 ~ 1.6	21	100	100	330-T25S2D16	$139.00
FOR CONTACTORS S09 & MOTOR SIZE 1-1/2HP						
2D25	1.6 ~ 2.5	33	100	100	330-T25S2D25	$139.00
FOR CONTACTORS S09 & MOTOR SIZE 3HP						
2D40	2.5 ~ 4.0	52	100	100	330-T25S2D40	$139.00
FOR CONTACTORS S09 & MOTOR SIZE 5HP						
2D63	4.0 ~ 6.3	82	100	100	330-T25S2D63	$148.00
FOR CONTACTORS S09 & MOTOR SIZE 7-1/2HP						
2U10	6.3 ~ 10	130	100	42	330-T25S2U10	$154.00
FOR CONTACTORS S18 & MOTOR SIZE 15HP						
2U16*	10 ~ 16	208	50	10	330-T25S2U16	$170.00
FOR CONTACTORS S25 & MOTOR SIZE 15HP						
2U20*	16 ~ 20	260	50	10	330-T25S2U20	$185.00
FOR CONTACTORS S32 & MOTOR SIZE 20HP						
2U25*	20 ~ 25	325	50	10	330-T25S2U25	$218.00
2U32*	25 ~ 32	416	50	10	330-T25S2U32	$218.00
FOR CONTACTORS S40 & MOTOR SIZE 25HP						
2U32*	25 ~ 32	416	50	10	330-T25S2U32	$218.00

*NOTE: Type F combination motor controller configuration only.

VI. MOTOR PROTECTION CIRCUIT BREAKER STANDARD AUXILIARY CONTACT CONFIGURATION (FRONT MOUNTED)

CODE	DESCRIPTION	CAT. NO.	LIST
(Blank)	None	—	—
F11	1NO + 1NC Std. Auxiliary Contacts	330-FA11S25	$ 21.00

VII. MOTOR PROTECTION CIRCUIT BREAKER STANDARD AUXILIARY CONTACT CONFIGURATION (LEFT SIDE MOUNTED)

CODE	DESCRIPTION	CAT. NO.	LIST
(Blank)	None	—	—
S11	1NO + 1NC Std. Auxiliary Contacts	330-SA11S25	$ 21.00
S20	2NO Std. Auxiliary Contacts	330-SA20S25	$ 21.00

VIII. MOTOR PROTECTION CIRCUIT BREAKER TRIP INDICATING AUXILIARY CONTACT CONFIGURATION (LEFT SIDE MOUNTED)

CODE	DESCRIPTION	CAT. NO.	LIST
T22	1NO + 1NC Overload and 1NO + 1NC Short Circuit Trip Indicating Auxiliary Contacts	330-STA22S25	$ 57.00

IX. MOTOR PROTECTION CIRCUIT BREAKER LINE SIDE TERMINAL BARRIER

CODE	DESCRIPTION	CAT. NO.	LIST
L	Line Side Terminal Barrier	330-LSTBS25	$ 54.00

SOME OF OUR MOST POPULAR TYPE E DOL STARTER CONFIGURATIONS

MAX. LE (A) AC-3	3Φ HP @600V AC	COIL VOLTAGE	CONTACTOR AUXILIARY CONTACTS NO	NC	CURRENT ADJUSTMENT RANGE (A)	MPCB STANDARD AUXILIARY CONTACTS, FRONT MOUNTED NO	NC	MPCB TRIP INDICATING AUXILIARY CONTACTS, LEFT SIDE MOUNTED NO	NC	CATALOG NUMBER	LIST
9	5	120V 60Hz/110V 50Hz	1	0	4.0 ~ 6.3	1	1	2	2	630-S09D10-2D63-F11-T22-L	$409.00
9	7-1/2	120V 60Hz/110V 50Hz	1	0	10 ~ 16	1	1	2	2	630-S09D10-2U16-F11-T22-L	$431.00
25	15	120V 60Hz/110V 50Hz	1	0	16 ~ 20	1	1	2	2	630-S25D10-2U20-F11-T22-L	$492.00
32	20	120V 60Hz/110V 50Hz	0	0	20 ~ 25	1	1	2	2	630-S32D00-2U25-F11-T22-L	$538.00

Accessories for Series 300 Contactors

Modular contactor accessories can be installed in the field on all starters. Front and side mounted auxiliary contacts are common to all starter sizes. Surge suppressors install easily and securely to the contactor coil terminals.

Front Mounted Auxiliary Contacts

Our front mounted auxiliary contacts feature IP20 guarded terminals to protect against accidental contact with live parts. The device identification marker simplifies trouble shooting in panels with many contactors. These contacts snap-on and install without the use of tools. NOTE: See chart below for maximum number of front mounted auxiliary contacts. *See Contactor Section 4 Page 10 for front mounted auxiliary contact part number and ordering information.*

MAXIMUM NUMBER OF FRONT OR SIDE MOUNTED AUXILIARY CONTACTS

CONTACTOR	MAXIMUM NUMBER
S09, S12, S18, S25	4
S32, S40	6

Surge Suppressors

Coil mounted surge suppressors protect sensitive electronic components in control circuits from damaging line voltage spikes. *See Contactor Section 4 Page 11 for surge suppressor part number and ordering information.*

DISCOUNT SCHEDULE F

Side Mounted Auxiliary Contacts

Side mounted auxiliary contacts feature IP20 guarded terminals to protect against accidental contact with live parts. NOTE: See chart at left for maximum number of side mounted auxiliary contacts. *See Contactor Section 4 Page 10 for side mounted auxiliary contact part number and ordering information.*

Operating Coils

Replacement coils for use with S09 - S40 Contactors. *See Contactor Section 4 Page 12 for operating coil part number and ordering information.*

Accessories for Series 330 Motor Protection Circuit Breakers

Trip Indicating Auxiliary Contacts

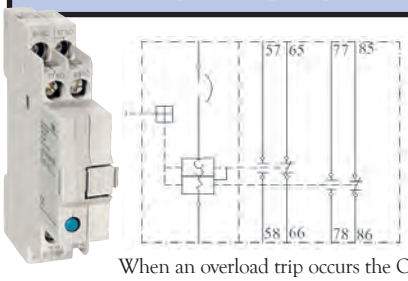

The trip indicating auxiliary contact module includes Overload Contacts and Short Circuit Contacts. When an overload trip occurs the Overload Contacts change state. When a short circuit trip occurs, the Overload Contacts and Short Circuit Contacts change state. In addition to the electrical contacts, the trip indicating auxiliary contact module includes a mechanical trip indication – the blue button protrudes from the module after a short circuit trip. The trip indicating contact module can be field installed without the use of tools on Series 330-T25S and 330-M25S Motor Protection Circuit Breakers and can be used in conjunction with standard front mounted (330-FA) and side mounted (330-SA) auxiliary contacts. NOTE: The Trip Indicating Auxiliary Contact and the Line Side Terminal Barrier are required to achieve Type E construction with a Series 330-T25S device. *See MPCB Section 9 Page 11 for trip indicating auxiliary contact part number and ordering information.*

Line Side Terminal Barrier

The line side terminal barrier provides increased electrical clearances to comply with the UL 60947-4-1 Self-protected Combination Motor Controller (Type E) requirements. The terminal barrier can be field installed on Series 330-T25S and 330-M25S Motor Protection Circuit Breakers. NOTE: The Line Side Terminal Barrier and the Trip Indicating Auxiliary Contact are required to achieve Type E construction with a Series 330-T25S device. *See MPCB Section 9 Page 11 for line side terminal barrier part number and ordering information.*

DISCOUNT SCHEDULE F

Accessories for Series 330 Motor Protection Circuit Breakers

FRONT MOUNTED AUXILIARY CONTACTS

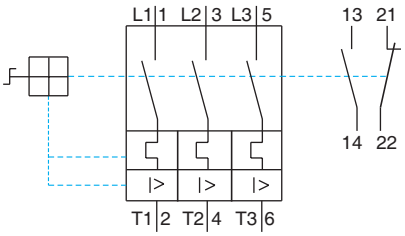

Our front mounted auxiliary contacts do not add depth to the motor protection circuit breaker and installs within its foot print – no extra panel area is required. IP20 guarded terminals protect against accidental contact with live parts. These contacts snap-on and install without the use of tools. *See MPCB Section 9 Page 10 for front mounted auxiliary contact part number and ordering information.*

SHUNT RELEASE MODULES

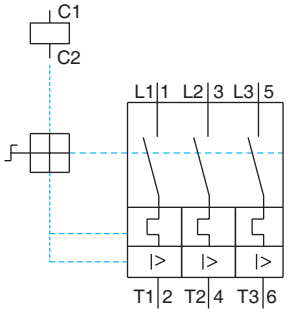

The shunt release module enables the motor protection circuit breaker to be turned "OFF" from a remote location. Snaps on and installs on the right side of the motor protection circuit breaker without the use of tools. IP20 guarded terminals to protect against accidental contact with live parts. Wide range of 50/60Hz operating voltages. Can be used in conjunction with front mounted and side mounted auxiliary contacts. *See MPCB Section 9 Page 11 for shunt release module part number and ordering information.*

COMMONING LINKS

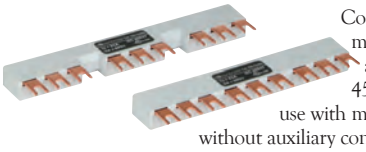

Commoning links provide a convenient means of distributing 3-phase power to a group of motor protection circuits. 45mm spacing commoning links are for use with motor protection circuit breakers without auxiliary contact modules or with a front mounted auxiliary contact module (330-FA). 54mm spacing commoning links are for use with motor protection circuit breakers with a side mounted auxiliary contact module (330-SA). IP20 construction to guard against accidental contact with live parts. Used in conjunction with 330-FT1S2 Feeder Module. *See MPCB Section 9 Page 12 for commoning link part number and ordering information.*

EXTERNAL OPERATING HANDLE

Our external operating handle provides reliable actuation of Series 630 Direct-On-Line (DOL) Starters from the outside of the enclosure and can be locked "OFF" for extra safety. Operating handles can be installed in enclosures with door thicknesses up to 4mm (5/32"). IP65 Ingress protection rating for the most demanding industrial environments. *See MPCB Section 9 Page 10 for external operating handle part number and ordering information.*

SIDE MOUNTED AUXILIARY CONTACTS

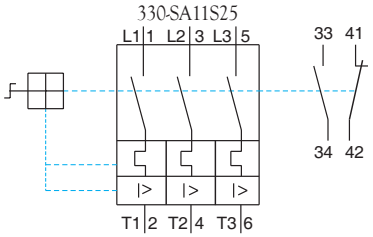

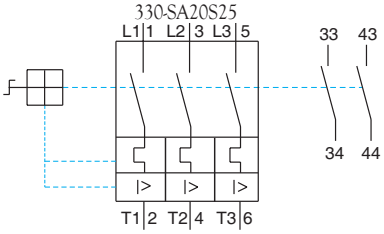

Our side mounted auxiliary contacts feature IP20 guarded terminals to protect against accidental contact with live parts. These contacts snap-on to the left side of the motor protection circuit breaker and install without the use of tools. *See MPCB Section 9 Page 10 for side mounted auxiliary contact part number and ordering information.*

ADJUSTMENT SCALE COVER

The adjustment scale cover prevents inadvertent or unauthorized adjustment of the full load current dial setting of the motor protection circuit breaker. *See MPCB Section 9 Page 12 for adjustment scale cover part number and ordering information.*

SHROUD FOR UNUSED COMMONING LINK TERMINALS

The highly visible yellow terminal shroud with the hazard symbol is for covering unused terminals of the 330-CL commoning links. Use of the shroud insulates the unused terminals and enables the easy installation of additional motor protection circuit breakers in the future. *See MPCB Section 9 Page 12 for shroud part number and ordering information.*

FEEDER TERMINAL FOR COMMONING LINK TERMINALS

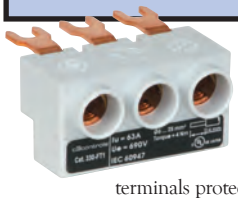

The feeder terminal accepts the main branch circuit conductors and distributes power to the 330-CL Commoning Links. The feeder terminal overlaps the commoning link when installed. IP20 guarded terminals protect against accidental contact with live parts. Continuous current rating: 63A. *See MPCB Section 9 Page 12 for feeder terminal part number and ordering information.*

DISCOUNT SCHEDULE F

Specifications:

SERIES 630 DIRECT ON-LINE (DOL) STARTER SPECIFICATIONS								
		STARTER CURRENT RATING CODE						
	UNITS	S09	S12	S18	S25	S32	S40	
ELECTRICAL GENERAL		For detailed contactor specifications by starter rating code, see Section 4 Page 13						
		For detailed motor protection circuit breaker specifications by catalog number, see Section 9 Page 13						
Rated Operating Frequency	Hz	50/60						
Rated Control Frequencies	Hz	AC: 50Hz, 60Hz, 50/60Hz and DC						
ELECTRICAL UL/CSA APPLICATIONS		For detailed contactor specifications by starter rating code, see Section 4 Page 13						
		For detailed motor protection circuit breaker specifications by catalog number, see Section 9 Page 13						
Rated Operating Voltage, Ue	VAC	600						
Short Circuit Current Rating @ 460V AC	kA	50						
Maximum Fuse or Circuit Breaker Size	A	450						
Short Circuit Current Rating @ 600V AC	kA	25						
Maximum Fuse or Circuit Breaker Size	A	450						
ELECTRICAL IEC APPLICATIONS		For detailed contactor specifications by starter rating code, see Section 4 Page 13						
		For detailed motor protection circuit breaker specifications by catalog number, see Section 9 Page 14						
Rated Insulation Voltage, Ui	V	690						
Rated Impulse Voltage, Uimp	kV	6						
Rated Operating Voltage, Ue	VAC	690						
COIL CHARACTERISTICS		For detailed contactor specifications by starter rating code, see Section 4 Page 14						
Rated Insulation Voltage, Ui	V	1,000						
Operating Limits		80 ~ 110% of Rated Coil Voltage						
MECHANICAL		For detailed contactor specifications by starter rating code, see Section 4 Page 15						
		For detailed motor protection circuit breaker specifications by catalog number, see Section 9 Page 14						
ENVIRONMENTAL		For detailed contactor specifications by starter rating code, see Section 4 Page 15						
		For detailed motor protection circuit breaker specifications by catalog number, see Section 9 Page 14						
Ambient Operating Temperature	°C / °F	-20 to +55 / -4 to +131						
Ambient Storage Temperature	°C / °F	-50 to +80 / -58 to +176						
Altitude	m / ft.	2,000 / 6,562						
CONSTRUCTION - GENERAL		For detailed contactor specifications by starter rating code, see Section 4 Page 15						
		For detailed motor protection circuit breaker specifications by catalog number, see Section 9 Page 15						
Number of Poles		3						
Pollution Degree		3						
Trip Class		10						
INGRESS PROTECTION								
Main Terminals (with conductors connected)		IP20						
Coil Terminals		IP20						
Auxiliary Contact Terminals		IP20						
CONSTRUCTION - CONDUCTOR CROSS SECTIONS		For detailed contactor specifications by starter rating code, see Section 4 Page 15						
		For detailed motor protection circuit breaker specifications by catalog number, see Section 9 Page 15						
ROHS COMPLIANCE		For RoHS compliance documentation by product, refer to www.c3controls.com.						

SERIES 630 DOL STARTER CIRCUIT DIAGRAMS

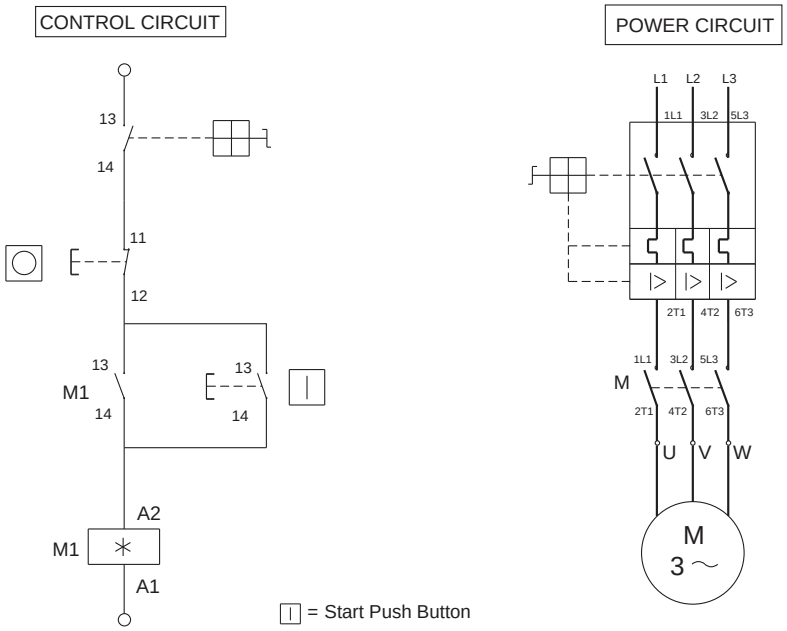

= Start Push Button

= Emergency Stop Push Button

MPCB = Equipped for Thermal/Magnetic Protection

✳ = Coil Voltage Code

MOTOR PROTECTION CIRCUIT BREAKER AND S09, S12, S18 OR S25 AC CONTACTOR ASSEMBLY

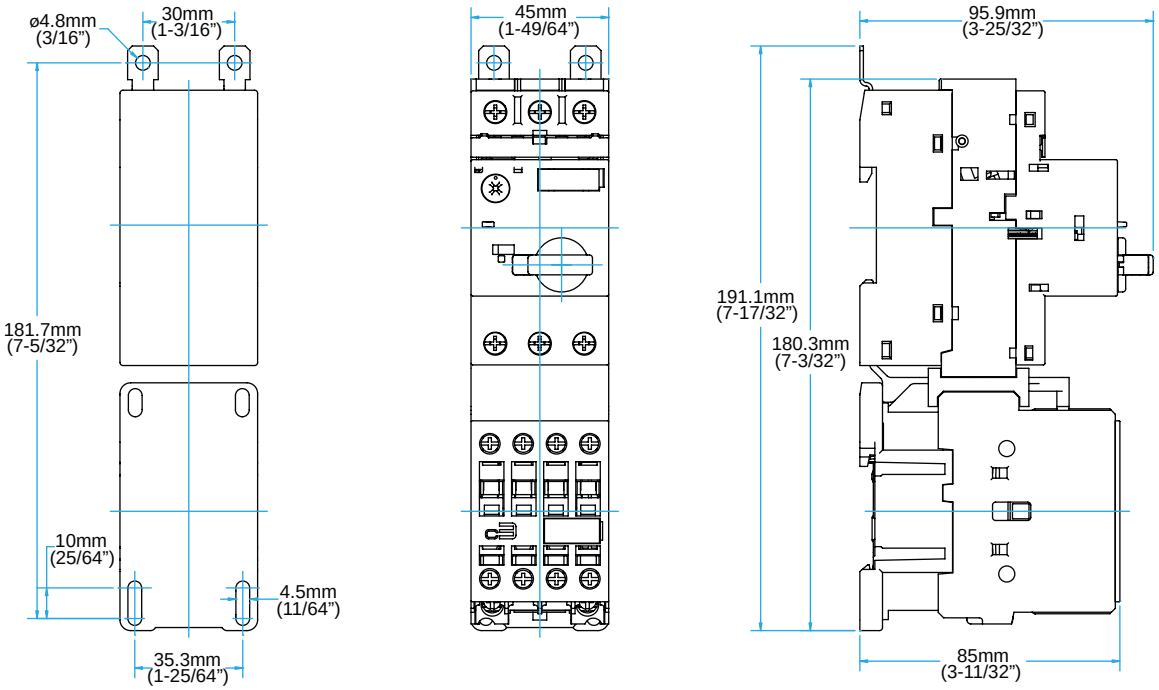

MOTOR PROTECTION CIRCUIT BREAKER AND S32 OR S40 AC CONTACTOR ASSEMBLY

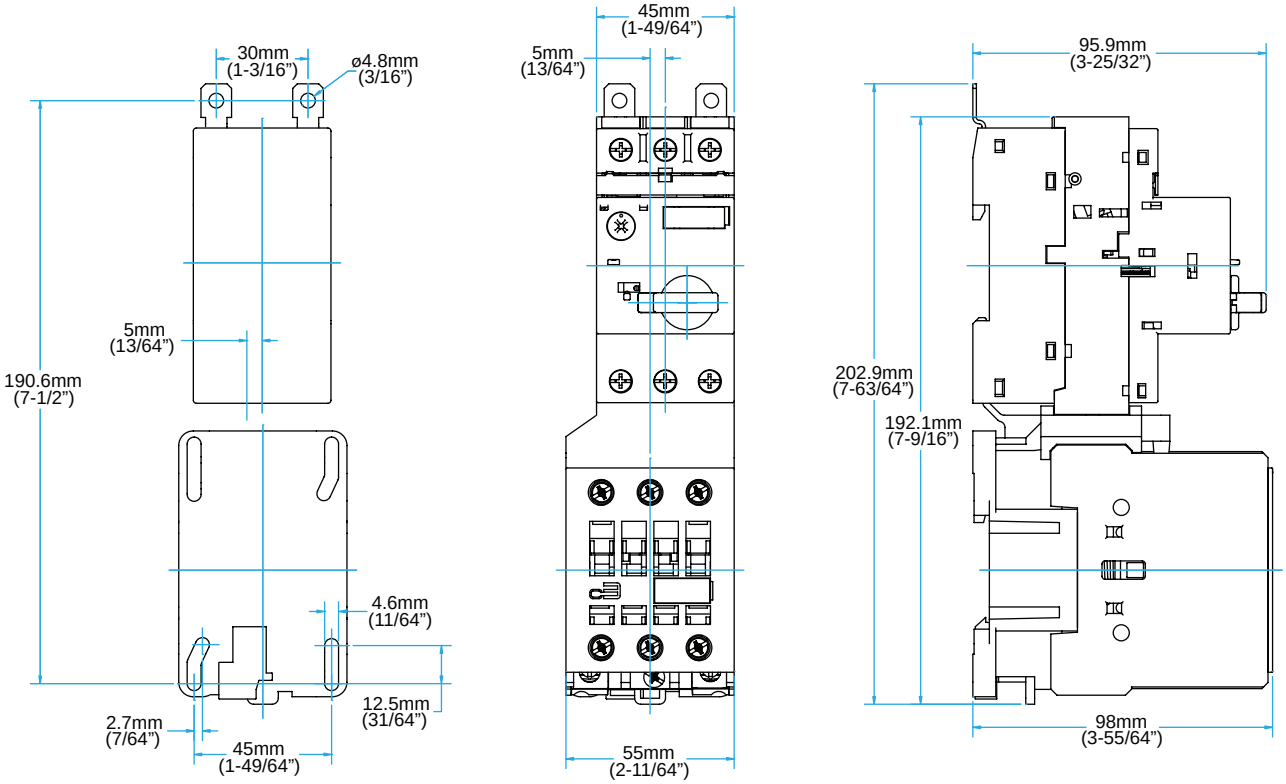

MOTOR PROTECTION CIRCUIT BREAKER AND M07, M09, M12 OR M16 MINIATURE CONTACTOR ASSEMBLY

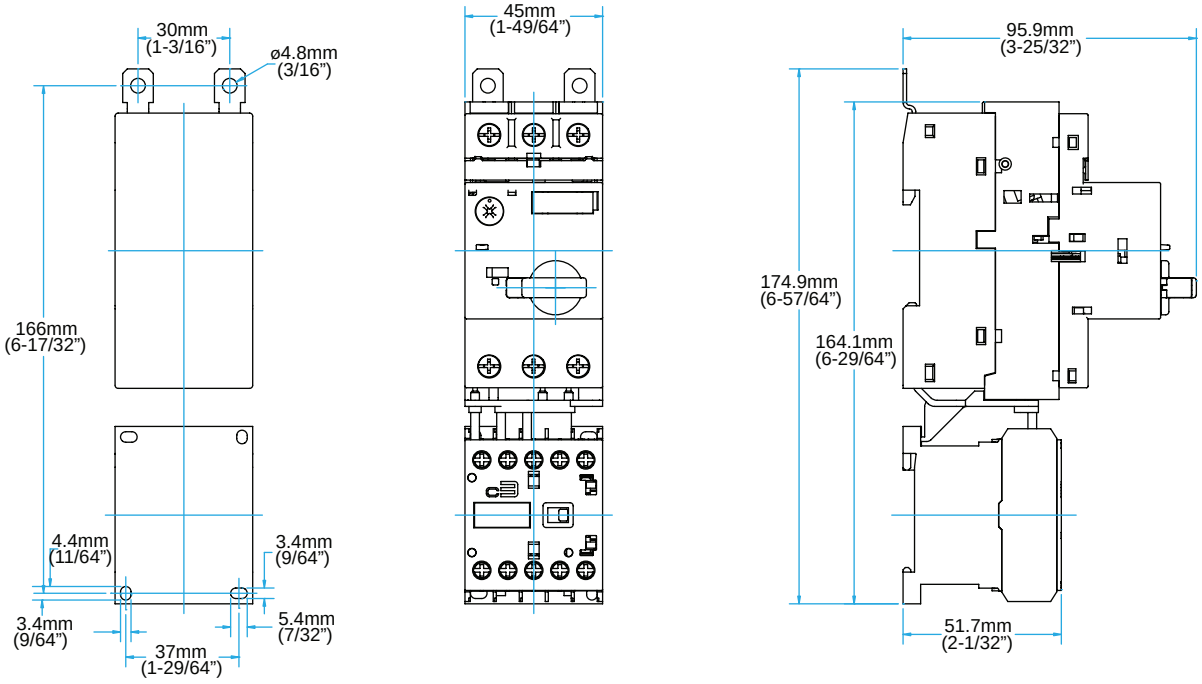

MOTOR PROTECTION CIRCUIT BREAKER AND S09, S12, S18 OR S25 DC CONTACTOR ASSEMBLY

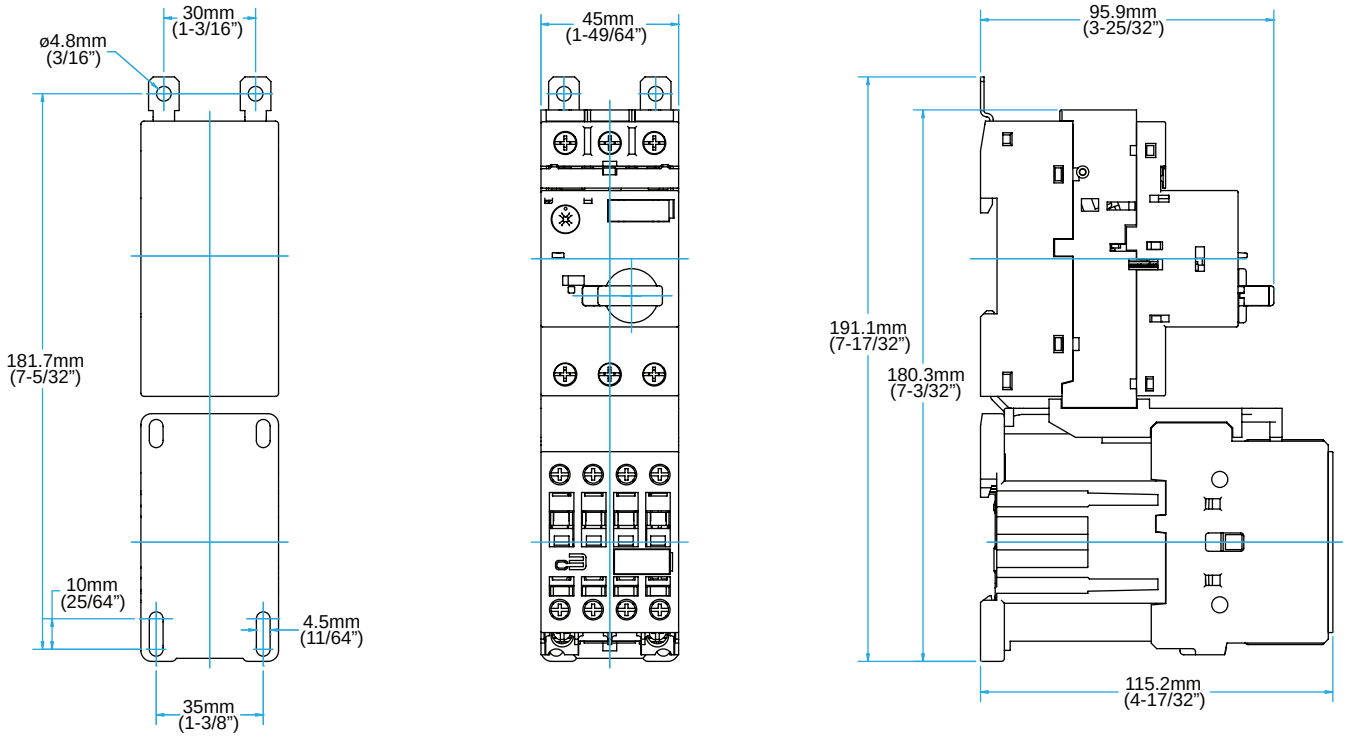

MOTOR PROTECTION CIRCUIT BREAKER AND S32 OR S40 DC CONTACTOR ASSEMBLY

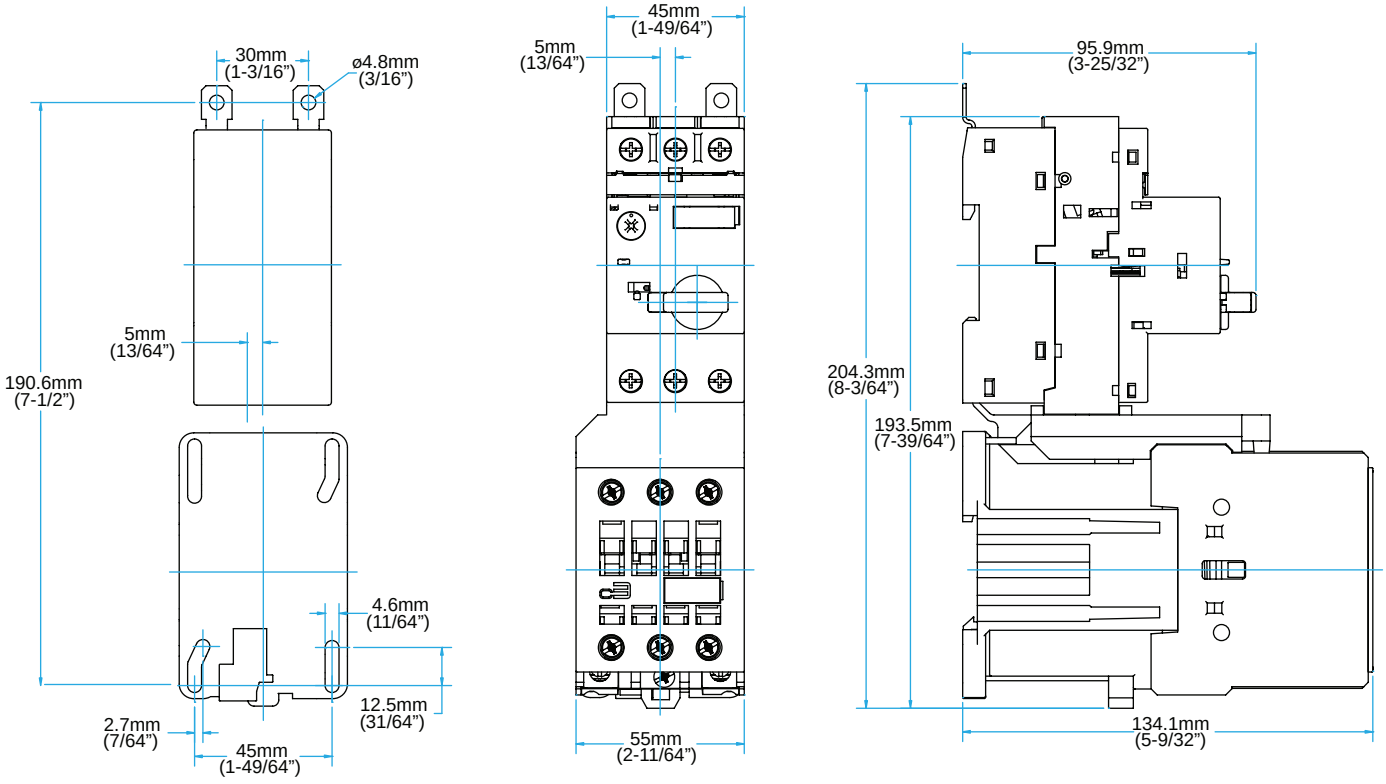

TYPE E CONSTRUCTION – MOTOR PROTECTION CIRCUIT BREAKER AND S09, S12, S18 OR S25 AC CONTACTOR ASSEMBLY

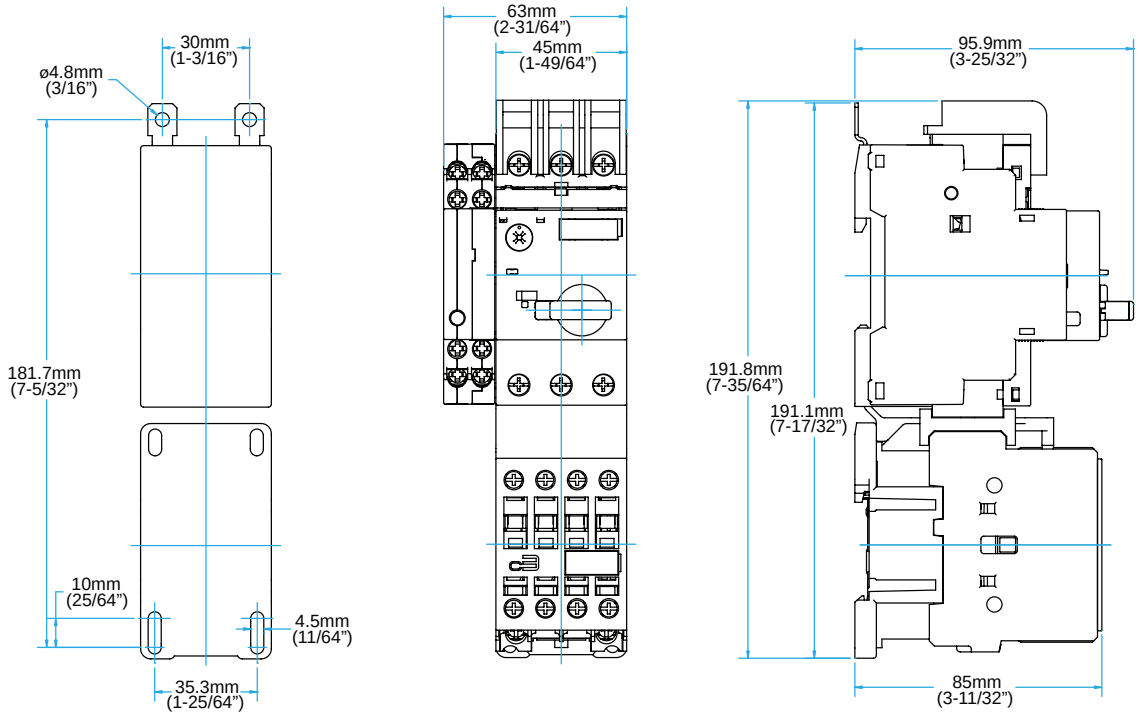

TYPE E CONSTRUCTION – MOTOR PROTECTION CIRCUIT BREAKER AND S32 OR S40 AC CONTACTOR ASSEMBLY

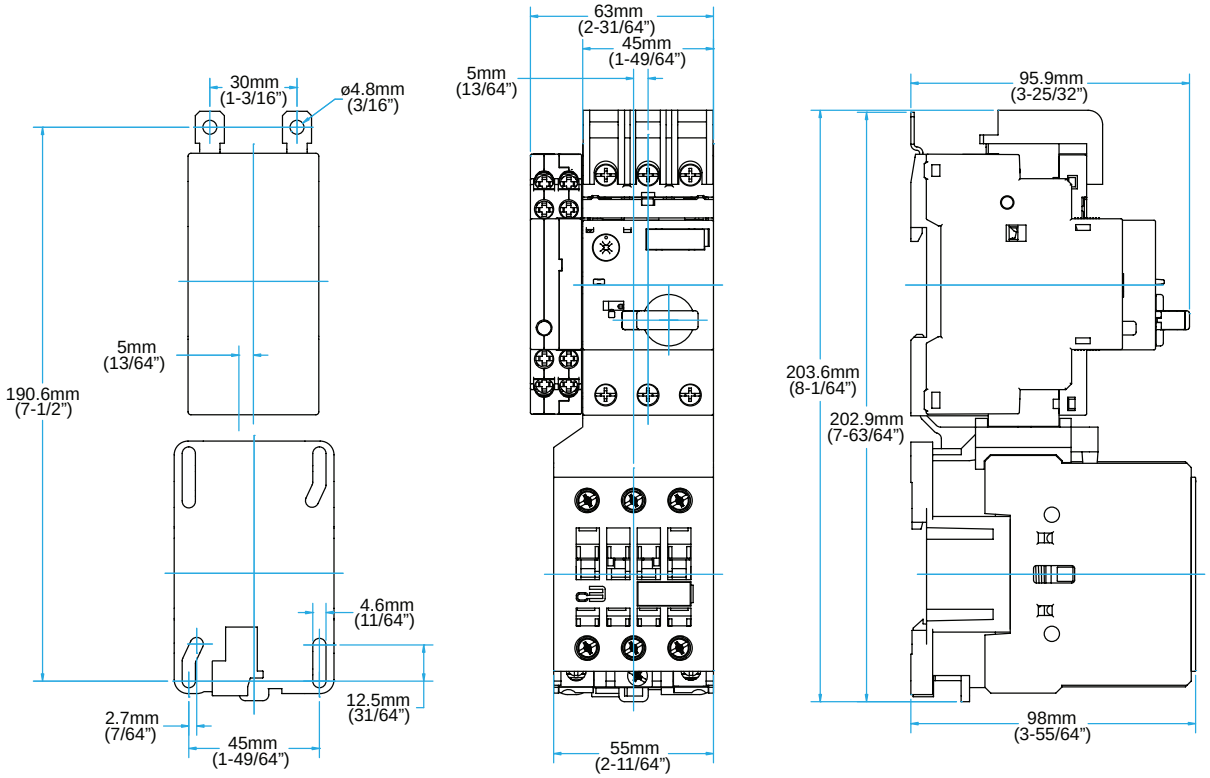

TYPE E CONSTRUCTION – MOTOR PROTECTION CIRCUIT BREAKER AND S09, S12, S18 OR S25 DC CONTACTOR ASSEMBLY

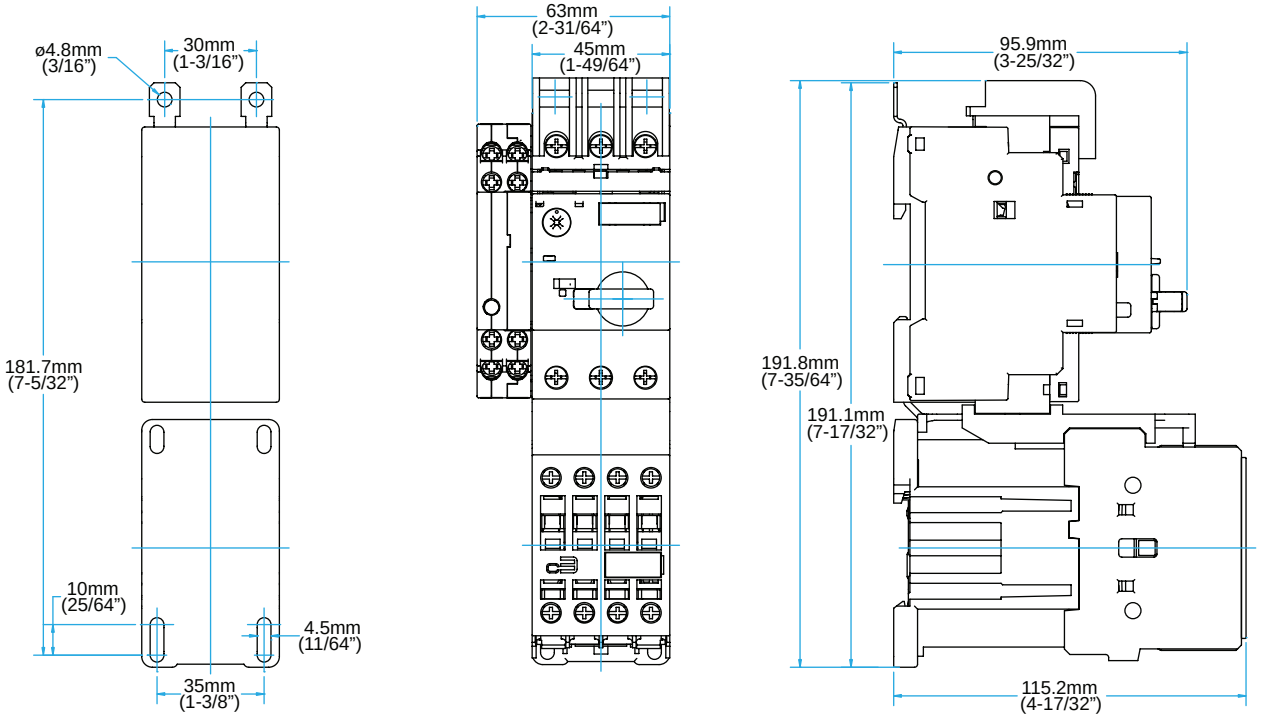

TYPE E CONSTRUCTION – MOTOR PROTECTION CIRCUIT BREAKER AND S32 OR S40 DC CONTACTOR ASSEMBLY

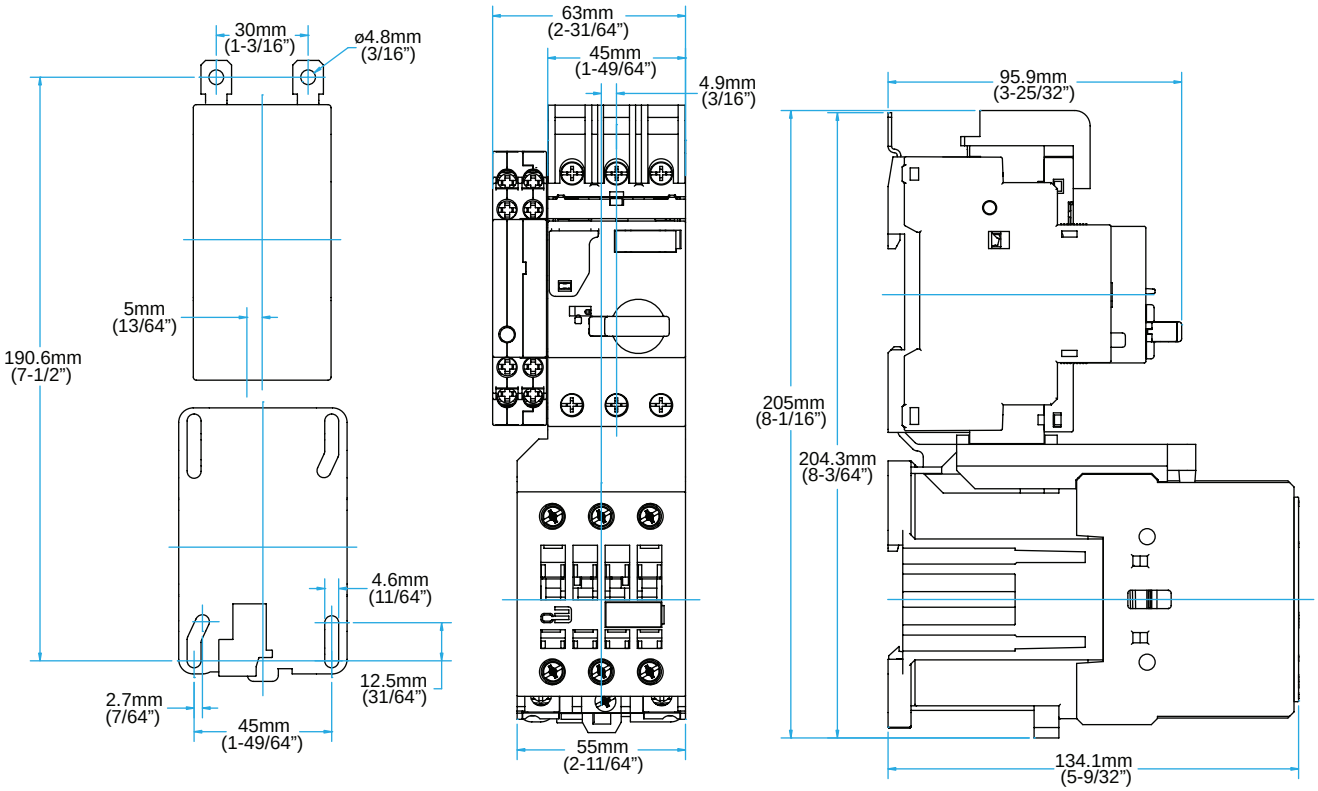

ENCLOSED MOTOR PROTECTION CIRCUIT BREAKER & CONTACTOR ASSEMBLIES

series E630

c3controls' Series E630 Enclosed Direct-On-Line (DOL) Starters come with all the features and benefits of our Series 330 Motor Protection Circuit Breaker, Series 300 Contactor, and 22mm IEC pilot devices with the added protection of our Polycarbonate enclosures rated Type 4X and IP65. Our compact components and enclosures save space in your control panel, and come pre-assembled and wired to reduce your installation time and costs. c3controls' Series E630 is also available in Type E.

Section 12

Enclosed Direct-On-Line Starters
Motor Protection Circuit Breaker + Contactor 6

Enclosed Type E Direct-On-Line Starters
Motor Protection Circuit Breaker + Contactor 8

For 200V 3 Phase Motors 10

For 240V 3 Phase Motors 12

For 480Y/277V 3 Phase Motors 14

For 600Y/347V 3 Phase Motors 16

Specifications 18

Dimensions 19

PROVEN

Conformity to Standards:	Certifications:
MOTOR PROTECTION CIRCUIT BREAKERS	
UL 508, 60947-4-1	UL File #: E187641 (Guide NLRV, NLRV7), E312106 (Guide NKJH, NKJH7)
CSA C22.2 No. 14	
IEC 60947-1, 60947-4-1	CE Marked (per EU Low Voltage Directive 2006/95/EC and RoHS Directive 2011/65/EU)
CONTACTORS	
UL 508, 60947-4-1	UL File #: E236197 (Guide NLDX, NLDX7), E68568 (Guide NKCR, NKCR7)
CSA C22.2 No. 14	
IEC 60947-1, 60947-4-1	CE Marked (per EU Low Voltage Directive 2006/95/EC and RoHS Directive 2011/65/EU)
ENCLOSURES	
UL 50	UL Listed
CSA C22.2 No. 94	CSA Certified
IEC 60529	

Visit www.c3controls.com to download product certifications.

NOTE: The scope (range, description, price, specifications, dimensions, etc.) of the product featured in this section is subject to change without notice. Refer to www.c3controls.com for product updates.

ENCLOSED MPCB & CONTACTOR ASSEMBLIES

c3controls offers a comprehensive line of Motor Control products designed and manufactured to meet the needs of the machine builder. We promise durable products at a price that gives you an edge. Check out all the features of our Series E630 Enclosed Motor Protection Circuit Breaker and Contactor Assemblies below!

DELIVERING SUPERIOR PRODUCT QUALITY AND MANUFACTURING EXCELLENCE

✓ **Proven**	Our Series E630 Enclosed DOL Starters are UL Listed and CE marked meeting global standards requirements.
✓ **Compact**	Reduced panel area for lower installed costs—Three (3) contactor frame sizes directly interchangeable with other manufacturers.
✓ **Simple Customization**	Our Series E630 Enclosed DOL Starters are available with various pilot device and wiring options for appropriate operator interface.
✓ **Polycabonate Enclosures**	Available in two sizes, our polycarbonate enclosures come with a lift-off cover, and are rated Type 1, 4, 4X, and IP66 for the most demanding applications—including wash-downs and corrosive environments.
✓ **Reliable**	Contactor provides repeated ON/OFF switching for the motor, and the motor protection circuit breaker includes both a Class 10 thermal and magnetic trip elements for overload and short circuit protection of the motor and motor branch circuit conductors.
✓ **Environmentally Secure**	With 4/4X and IP65, our Series E630 line is built to last and withstand dust, corrosion, ice and rain.
✓ **Limited Lifetime Warranty***	Every product is backed by our limited lifetime warranty—unmatched in the industry—bringing you quality components that perform in the most demanding applications.
✓ **Quick Shipment**	We assemble, test and ship within 3 days, including legend plates—and confirm every order ensuring accuracy.
✓ **Advantage Pricing**	Our approach to product development, manufacturing, and focus on servicing the OEM and Electrical Equipment Builder reduces cost. The result—the best value in the industry.

*See c3controls Terms & Conditions

> *c3controls' products uphold our commitment to provide quality solutions to our customers while keeping our costs under control.*

Len Frid, Electrical Engineer • **Advanced Poly-Packaging, Inc.**

Type G Enclosure
(255mm x 180mm x 177mm)

Type H Enclosure
(378mm x 188mm x 181mm)

UNIQUE PRODUCT LINE FEATURES

FACTORY ASSEMBLED AND WIRED

Factory assembled and wired starters and pilot devices provide the convenience of a single catalog number and shorter control panel bill of material.

SELF-PROTECTED

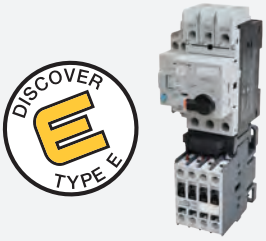

Listed as a UL 60947-4-1 Type E Self-protected Combination Motor Controller for circuits capable of delivering up to 50kA @ 480V.

HIGH FAULT SCCR

High fault short circuit current rating of 50kA @ 480V provides safety and reliability in high fault applications.

MULTI-FUNCTION DEVICE

ARTICLE 430 PART VII - NFPA 70

	To Supply	NEC Part
Motor disconnecting means		Part IX
Motor branch-circuit, short circuit, and ground-fault protection		Part IV
Motor circuit conductor		Part II
Motor controller		Part VII
Motor control circuits		Part VI
Motor overload protection		Part III
Motor		Part I

Our Series 330 MPCBs are certified as Manual Motor Controllers Suitable as Motor Disconnects, can be used in Group Motor Installations, and can be used to manually control individual motors and protect them against overload and short circuit currents.

ADJUSTABLE CURRENT SETTING

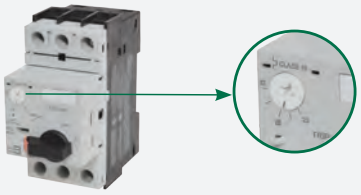

Full load current adjustment ratio enables overload relay to be set to exact FLA of motor. Provides phase protection for the motor against overload currents.

FIND IT FAST

Enclosed MPCB & Contactor Assemblies

- Certifications
- Specifications
- Dimension Drawings
- Installation Instructions
- Easy to Buy

www.c3controls.com

Motor Control Device Solutions

c3controls motor control devices are the perfect solution for manufacturers who want proper motor control and superior motor protection without having to overpay or compromise on quality. In fact, we engineer so much performance and flexibility into our products, we can deliver a remarkably better value than our competitors.

c3controls products deliver like no other.

Seamless Compatibility

Contactors, overload relays and motor protection circuit breakers are designed by c3controls to work together, with common connections and accessories, resulting in a high functioning compact starter.

LEADING THE INDUSTRY
with our compact miniature 10HP contactors and control relays. One frame size (AC or DC)—28% reduction in panel area.

Compact

The small size of c3controls motor control devices, plus features like common accessories, enable assembly into smaller control panels for lower installed costs.

Reliable Protection

Contactors provide the repeated on/off switching for the motor and are designed for motor, actuator, solenoid, and other power switching applications. Overload relays provide Trip Class 10 protection against overload and phase-loss conditions, and have ambient temperature compensation for motor protection in high temperature environments.

Ensures the protection of equipment and user.

Motor protection circuit breakers provide overload, phase-loss and short circuit protection, can be used by themselves as manual motor controllers or with contactors in group motor installations, and can achieve Type 2 coordination for optimum performance.

Type E self-protected combination manual motor controllers provide disconnecting means, branch circuit protection, motor control and motor overload protection all in a single device.

Proven

Our motor control devices are UL Listed and CE marked, meeting global standards requirements for use anywhere in the world.

NFPA 70 - National Electrical Code (NEC)

Understanding what functions are needed in your motor control circuit is critical when selecting motor control devices. Engineers benefit from the standards and codes established to ensure safety and protection to personnel and equipment.

More than just knowing the standards, c3controls, as a manufacturer of motor control products, has the application expertise you need to select the right products.

c3controls & Article 430 - Motors, Motor Circuits and Controllers

	To Supply	NEC Part	c3controls Product Series		
Motor disconnecting means		Part IX	330	630	Type E: 330 630
Motor branch-circuit, short circuit, and ground-fault protection		Part IV			Type E: 330 630
Motor circuit conductor		Part II			
Motor controller		Part VII	300/310 330	620 630	Type E: 330 630
Motor control circuits		Part VI			
Motor overload protection		Part III	320 330	620 630	Type E: 330 630
Motor		Part I			

Our motor control products align with Article 430 Part VII, Motor Controller, of the NFPA 70, the National Electrical Code.

IT'S EASY TO BUILD YOUR OWN ENCLOSED DOL STARTER

Simply pick the code number from each of the sections below and combine them to build your part number.

Enclosed Direct-On-Line (DOL) Starters

E630 – ____ ____ ____ – ____ – ____ – ____ ____ – ____ ____ – ____

I II III IV V VI VII VIII IX X XI

Example: To build one of our most popular Enclosed DOL Starters, the part number would be
E630 + II + III + IV + V + VI + VII + VIII + IX + X + XI or **E630-GD10-10-10-GGRY-02G-W3**

I. ENCLOSED STARTER TYPE

CODE	DESCRIPTION	LIST
E630	Enclosed Series 630 DOL Starter: Series 330 MPCB + Series 300 Contactor	$198.00

II. NON-REVERSING CONTACTOR (3 NORMALLY OPEN POLES)

	MAX. Ie (A)		RATINGS FOR SWITCHING AC MOTORS - AC-2, AC-3										CONTACTOR CAT. NO.	
			3 PHASE kW (50Hz)				1 PHASE HP (60Hz)		3 PHASE HP (60Hz)					
CODE	AC-3	AC-1	230V	400/415V	500V	690V	115V	230V	200V	230V	460V	575V	PREFIX	LIST
G	9	25	2.2	4	5.5	5.5	1/2	1-1/2	3	3	5	7-1/2	300-S09N30	$ 53.00
H	12	25	3	5.5	7.5	7.5	3/4	2	3	3	7-1/2	10	300-S12N30	$ 79.00
J	18	32	4	7.5	10	10	1	3	5	5	10	15	300-S18N30	$ 87.00
K	25	45	7.5	11	15	15	2	3	7-1/2	7-1/2	15	15	300-S25N30	$ 99.00
L	32	60	9	15	18.5	18.5	3	5	10	10	20	25	300-S32N30	$130.00
M	40	60	11	18.5	25	30	3	5	10	15	30	25	300-S40N30	$178.00

III. CONTACTOR COIL VOLTAGE CODE

AC COIL VOLTAGE CODES

VOLTAGE	12	24	48	110 / 120	208	220	230	240	277	400	400 ~ 415	480	500	550	600
50Hz	—	—	—	D	—	—	—	—	—	—	R	—	T	U	—
60Hz	—	—	—	D	L	—	—	F	P	—	—	R	—	—	T
50/60Hz	XB	XC	XJ	—	—	XAJ	XN	—	—	XAM	—	—	—	—	—

DC COIL VOLTAGE CODES

VOLTAGE	12	24	125	250	LIST
-S09 to -S25	ZB	ZC	ZQ	ZP	$ 35.00
-S32 to -S40	ZB	ZC	ZQ	ZP	$ 78.00

IV. CONTACTOR AUXILIARY CONTACT CONFIGURATION

CODE	DESCRIPTION	LIST
00	Without Auxiliary Contacts (Contactor Codes L and M)	—
10	1 Normally Open*	$ 18.00
01	1 Normally Closed*	$ 18.00

*NOTE: Integral right side mounted on Contactor Codes G to K, front mounted on Contactor Codes L and M.

SEE OPPOSITE PAGE FOR PART BUILDER CHARTS VI – XI

V. MOTOR PROTECTION CIRCUIT BREAKER WITH THERMAL AND MAGNETIC TRIP ELEMENTS

CODE	RATED OPER. CURRENT (A)	ADJUSTMENT RANGE (A)	MAGNETIC TRIP CURRENT (A)	ULTIMATE INTERRUPTING CURRENT (Icu) (kA)		RATINGS FOR SWITCHING AC MOTORS*								MOTOR PROTECTION CIRCUIT BREAKER CAT. NO.	LIST
						3 PHASE kW (50Hz)				3 PHASE HP (60Hz)					
				400V	480V	230V	400/415V	500V	690V	200V	230V	460V	575V		
01	0.16	0.10 ~ 0.16	2.1	100	100	—	—	—	0.06	—	—	—	—	330-T25S2C16	$122.00
02	0.25	0.16 ~ 0.25	3.3	100	100	—	0.06	0.06	0.12	—	—	—	—	330-T25S2C25	$122.00
03	0.40	0.25 ~ 0.40	5.2	100	100	—	0.09	0.12	0.18	—	—	—	—	330-T25S2C40	$132.00
04	0.63	0.40 ~ 0.63	8.2	100	100	0.06	0.12	0.25	0.25	—	—	—	1/4	330-T25S2C63	$136.00
05	1.0	0.63 ~ 1.0	13	100	100	0.12	0.25	0.37	0.55	—	—	1/2	1/2	330-T25S2D10	$139.00
06	1.6	1.0 ~ 1.6	21	100	100	0.18	0.55	0.75	1.1	1/4	1/3	3/4	1	330-T25S2D16	$139.00
07	2.5	1.6 ~ 2.5	33	100	100	0.37	0.75	1.1	1.5	1/2	1/2	1-1/2	1-1/2	330-T25S2D25	$139.00
08	4.0	2.5 ~ 4.0	52	100	100	0.75	1.5	2.2	3	3/4	1	2	3	330-T25S2D40	$139.00
09	6.3	4.0 ~ 6.3	82	100	100	1.1	2.2	3	4	1-1/2	1-1/2	3	5	330-T25S2D63	$148.00
10	10	6.3 ~ 10	130	100	42	2.2	4	4	7.5	3	3	7-1/2	10	330-T25S2U10	$154.00
11	16	10 ~ 16	208	50	10	3.7	7.5	9	12.5	5	5	10	15	330-T25S2U16	$170.00
12	20	16 ~ 20	260	50	10	3.7	9	12.5	15	5	7-1/2	15	20	330-T25S2U20	$185.00
13	25	20 ~ 25	325	50	10	5.5	12.5	15	22	7-1/2	7-1/2	15	20	330-T25S2U25	$218.00
14	32	25 ~ 32	416	50	10	7.5	15	18.5	30	10	10	20	25	330-T25S2U32	$218.00

*NOTE: HP and kW ratings shown are for reference. The final selection of the Motor Protection Circuit Breaker must be based on the acutal motor full load current.

ENCLOSED DOL STARTER PART BUILDER (CONT.)

VI. MOTOR PROTECTION CIRCUIT BREAKER ACCESSORIES

CODE	FRONT MOUNT AUX., 1 NO + 1 NC 330-FA11S25	SIDE MOUNT AUX., 1 NO + 1 NC 330-SA11S25	SIDE MOUNT AUX., 2 NO 330-SA20S25	TRIP IND. AUX., 2 NO + 2 NC 330-STA22S25	LINE SIDE TERM. BARRIER 330-LSTB25	LIST
00	—	—	—	—	—	—
01	1	—	—	—	—	$ 21.00
02	—	1	—	—	—	$ 21.00
03	—	—	1	—	—	$ 21.00
04	—	—	—	1	—	$ 57.00
05	—	—	—	—	1	$ 54.00
06	1	1	—	—	—	$ 42.00
07	1	1	—	1	—	$ 99.00
08	1	1	—	—	1	$ 96.00
09	1	—	1	—	—	$ 42.00
10	1	—	1	1	—	$ 99.00
11	1	—	1	—	1	$ 96.00
12	1	—	—	1	—	$ 78.00
13	1	—	—	—	1	$ 75.00
14	—	1	—	1	—	$ 78.00
15	—	1	—	—	1	$ 75.00
16	—	—	1	1	—	$ 78.00
17	—	—	1	—	1	$ 75.00
18	—	—	—	1	1	$111.00
19	1	—	—	1	1	$132.00
20	—	1	—	1	1	$132.00
21	—	—	1	1	1	$132.00
22	1	1	—	1	1	$153.00
23	1	—	1	1	1	$153.00

VII. POLYCARBONATE ENCLOSURE DIMENSION (TYPE 4X & IP66)

CODE	FOR CONTACTOR CODES	DIMENSION REF. / H x W x D	LIST
G	AC and DC: G, H, J, K	1 / 255mm x 180mm x 177mm	$270.00
H	AC and DC: G, H, J, K, L, M	2 / 378mm x 188mm x 181mm	$648.00

VIII. MPCB EXTERNAL OPERATING HANDLE OPTIONS

CODE	DESCRIPTION	OPERATOR COLOR	BEZEL COLOR	LIST
(Blank)	None	—	—	—
GRY	Round (Type 1, 2, 3, 3R, 4/4X, 12, 13 and IP65)	Red	Yellow	$109.50
GBG	Round (Type 1, 2, 3, 3R, 4/4X, 12, 13 and IP65)	Black	Grey	$109.50

X. 22MM IEC UNIBODY PILOT LIGHT OPTIONS

CODE	DESCRIPTION	LED/LENS COLOR	CAT. NO.	LEGEND PLATE†
(Blank)	None	—	—	—
A	Non-Relampable	Amber	W22UNR-***LA-WNLA	FAULT
G	Non-Relampable	Green	W22UNR-***LG-WNLG	RUN
R	Non-Relampable	Red	W22UNR-***LR-WNLR	RUN

NOTE: † The legend plate face color is black with white letters.
*** Represents the Unibody pilot light voltage code. Voltage code will be based on the contactor coil voltage.

XI. WIRING OPTIONS

CODE	DESCRIPTION	FOR PILOT DEVICE CODES	FOR PILOT LIGHT CODES	WIRING DIAGRAM REF.‡	LIST
WW	Without Wiring	ALL	ALL	—	—
W2	Two Wire Control Wiring†	03, 04	(Blank), G*, R*	1a	$ 18.00
		04	A	1b	
		05, 06	(Blank), G*, R*	2a	
		06	A	2b	
W3	Three Wire Control Wiring*†◊	01, 02, 08, 09	(Blank), G, R	3a	$ 18.00
		02, 09	A	3b	

NOTE: * Contactor Auxiliary Contact Configuration Code 10 must be selected for this option.
† Motor protection circuit breaker front mounted auxiliary 330-FA11S25 must be used.
◊ Use W3 for Remote Wiring, refer to the installation instructions for details.
‡ For wiring diagrams go to www.c3controls.com.

DISCOUNT SCHEDULE **H**

SEE TOP OF PAGE FOR PART BUILDER CHARTS X – XI

IX. 22MM IEC PILOT DEVICE OPTIONS

CODE	DESCRIPTION	22MM CAT. NO.	LEGEND PLATE†	LIST
00	None	—	—	—
01	Momentary, Non-Illuminated Push Buttons:			$ 44.20
	Flush Green with 1NO Contact Block	W22PB-FG-10	START	
	Extended Red with 1NC Contact Block	W22PB-ER-01	STOP	
02	Momentary, Non-Illuminated Push Buttons with Pilot Light:			$ 63.20
	Flush Green with 1NO Contact Block	W22PB-FG-10	START	
	Extended Red with 1NC Contact Block	W22PB-ER-01	STOP	
	Unibody, Non-Relampable*	Refer to Chart X	Refer to Chart X	
03	Maintained, Non-Illuminated Selector Switch:			$ 27.20
	2-Position with 1NO Contact Block	W22S2-HW-10	OFF , ON	
04	Maintained, Non-Illuminated Selector Switch with Pilot Light:			$ 46.20
	2-Position with 1NO Contact Block	W22S2-HW-10	OFF , ON	
	Unibody, Non-Relampable*	Refer to Chart X	Refer to Chart X	
05	Maintained, Non-Illuminated Selector Switch:			$ 39.30
	3-Position with 2NO Contact Blocks	W22S3-HW-10/10	H , O , A	
06	Maintained, Non-Illuminated Selector Switch with Pilot Light:			$ 58.30
	3-Position with 2NO Contact Blocks	W22S3-HW-10/10	H , O , A	
	Unibody, Non-Relampable*	Refer to Chart X	Refer to Chart X	
07	Pilot Light:			$ 19.00
	Unibody, Non-Relampable*	Refer to Chart X	Refer to Chart X	
08	Momentary, Non-Illuminated Dual Push Buttons:			$ 40.20
	Extended Red (Bottom) with 1NC Contact Block and Flush Green (Top) with 1NO Contact Block	W22DPB-ERFG-01/10	—	
09	Momentary, Non-Illuminated Dual Push Buttons with Pilot Light:			$ 59.20
	Extended Red (Bottom) with 1NC Contact Block and Flush Green (Top) with 1NO Contact Block	W22DPB-ERFG-01/10	—	
	Unibody, Non-Relampable*	Refer to Chart X	Refer to Chart X	

NOTE: * Pilot lights only available if Contactor Coil Voltage Code (III) XC, D, XAJ, XN, F, ZC or ZQ is selected. Pilot light voltage will be 24V AC/DC, 110-130V AC/DC, or 220-240V AC to match contactor coil voltage.
† The legend plate face color is black with white letters.

Series E630 and Series E630 Type E Enclosed Direct-On-Line (DOL) Starters

c3controls Series E630 Enclosed Direct-On-Line (DOL) Starters are assemblies of a Polycarbonate Enclosure, Series 330 Motor Protection Circuit Breaker, Series 300 Contactor and Series 22mm IEC pilot devices. Our pilot devices and enclosures are rated for Type 4X and IP65. The motor protection circuit breaker includes both a class 10 thermal and magnetic trip elements for overload and short circuit protection of the motor and motor branch circuit components including the conductors. The contactor provides the repeated On/Off switching for the motor. A variety of pilot devices are available, including non-illuminated momentary push buttons, non-illuminated momentary dual push buttons (flush green and extended red), maintained selector switches (2 and 3 position), auxiliary contacts (NO and NC) and pilot lights (red, green and amber) for operation and indication. These assemblies are designed for controlling and protecting single and three phase motors. To save time and reduce installation cost, c3controls Series E630 and Type E are factory assembled and wired. We also offer the option of no pre-wiring.

Product features include:

- Enclosed starters provide the convenience of a single catalog number.
- Our compact, polycarbonate enclosures come with a lift-off cover and are rated Type 1, 4/4X and IP66, making them suitable for the most demanding applications – including wash-downs and corrosive environments.
- Pilot devices installed and a variety of wiring options are available.
- Red/Yellow or Black/Grey Operating Handles that can be padlocked in the "OFF" position with up to three padlocks for extra safety and the security needed during maintenance activities.
- Universal ratings and markings: A, kW, and HP ratings as well as applicable 3rd party certification markings.
- Unobstructed access to the two contactor coil terminals on the load-side of the starter makes control circuit wiring simple.
- Provides the same great features and benefits as our Enclosures, Series 330 Motor Protection Circuit Breakers, Series 300 Contactors and Series 22mm IEC pilot devices.
- Compact starter size reduces enclosure size resulting in space savings and lower installed costs.
- Single phase sensitivity to protect motors against damaging phase loss conditions.
- Series E630 provides Type 2 coordination in circuits capable of delivering up to 50kA at 460V.
- Trip indicating auxiliary contact can be used to identify the trip cause, either overload (1 NO and 1 NC) or short circuit (1 NO and 1 NC) – helping you determine the type of service/maintenance that may be required.
- Available as Enclosed Type E Starter.

UNIQUE PRODUCT FEATURES

Space Savings

Overall space requirement can be reduced because the short circuit protection provided by the Series 330 enables individual motor branch circuit fuses or circuit breakers and overload relays to be eliminated.

Labor Savings

Enclosed starters are factory assembled and wired, reducing installation time.

Cost Savings

Smaller size enclosures, reduced wiring, and factory wired pilot devices all combine to provide a lower cost enclosed starter with superior performance in normal operating conditions as well as in overload or short circuit conditions.

Discover Type E

UL 60947-4-1 Self-protected combination motor controller integrates protective functions into a single unit suitable for use in circuits delivering up to 50kA at 480V.

Type E devices provide motor disconnecting means, branch short circuit and ground fault protection, motor control and motor overload protection, reducing size and eliminating upstream fuses or circuit breakers for a motor circuit.

Series E630 Type E Enclosed Direct-On-Line (DOL) Starters

TYPE E FEATURES

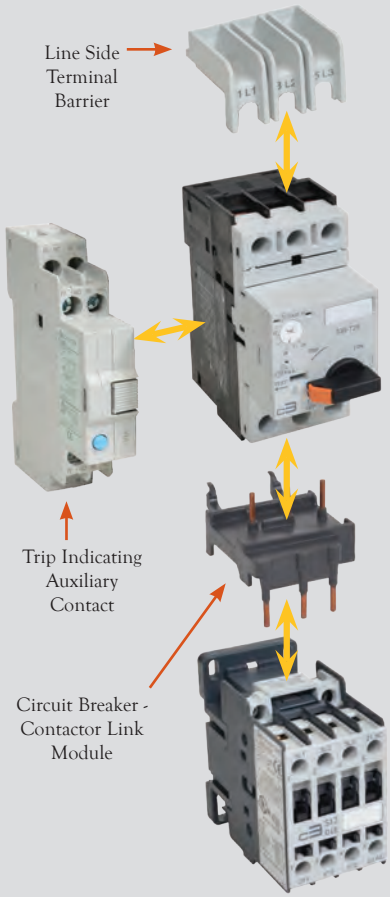

The trip indicating auxiliary contact accessory distinguishes between overload and short circuit fault conditions. This enhances functionality, minimizes downtime and reduces cost after a fault because the fault can be easily identified.

Trip indicating auxiliary contact and line side terminal barrier accessories are required to construct a UL 60947-4-1 combination motor controller.

Selecting The Components Needed To Configure A Type E or Type F Combination Motor Controller

c3controls makes it easy to identify and select the components needed to configure our Series E630 Enclosed Direct-On-Line (DOL) Starters as a listed UL 60947-4-1 combination motor controller.

The Type E and Type F configurator charts on pages 10-17 of this catalog are broken down by motor voltage, therefore you will need to know your Motor Voltage and Motor Size prior to configuring a Series E630 Type E or Type F Enclosed Direct-On-Line (DOL) Starter.

1. Select your appropriate Motor Voltage: 200V, 240V, 480Y/277V or 600Y/347V. Motor Voltages are located at the top of pages 10-17 for easy reference.
2. Follow the step-by-step configurator by simply choosing a code from each of the sections and create the exact product match for your needs. If a code is pre-filled, that means there is no option for that part, but you MUST include that code in your part builder number. Don't forget to include hyphens where indicated.
3. The motor protection circuit breaker options are broken down by type of contactor and motor size. Select the appropriate motor protection circuit breaker by choosing from the options listed below the Motor Size.
4. Type E self-protected combination motor controllers as fully assembled Direct-On-Line (DOL) Starters are available in up to 10A relay ranges. Type F combination motor controllers as fully assembled Direct-On-Line (DOL) Starters are available in up to 32A.

Our complete line of Series 630 Type E and Type F and Series E630 Type E and Type F Enclosed Direct-On-Line (DOL) Starters can be found on our website at www.c3controls.com, and have the same easy step-by-step configurator to help you create the exact product match for your needs.

IT'S EASY TO BUILD YOUR OWN ENCLOSED DOL STARTER

Simply pick the code number from each of the sections below and combine them to build your part number.

Enclosed Type E Direct-On-Line (DOL) Starters (FOR MOTOR VOLTAGE 200V)

E630 – ____ ____ ____ – ____ – ____ – ____ ____ – ____ ____ – ____

I II III IV V VI VII VIII IX X XI

Example: To build one of our most popular Enclosed DOL Starters, the part number would be
E630 + II + III + IV + V + VI + VII + VIII + IX + X + XI or **E630-GD10-10-23-HGRY-06R-W2**

I. ENCLOSED STARTER TYPE

CODE	DESCRIPTION	LIST
E630	Enclosed Series 630 Type E DOL Starter: Series 330 MPCB + Series 300 Contactor	$198.00

II. NON-REVERSING CONTACTOR (3 NORMALLY OPEN POLES)

CODE	MAX. Ie (A) AC-3	MOTOR SIZE @ 200V 3 PHASE < 1/4HP	1/3HP	1/2HP	1HP	1-1/2HP	3HP	5HP	7-1/2HP	10HP	CONTACTOR CAT. NO. PREFIX	LIST
G	9	✔	✔	✔	✔	✔	✔	—	—	—	300-S09N30	$ 53.00
J	18	—	—	—	—	—	—	✔	—	—	300-S18N30	$ 87.00
K	25	—	—	—	—	—	—	✔	—	—	300-S25N30	$ 99.00
L	32	—	—	—	—	—	—	—	✔	—	300-S32N30	$130.00
M	40	—	—	—	—	—	—	—	—	✔	300-S40N30	$178.00

DISCOVER E TYPE E

III. CONTACTOR COIL VOLTAGE CODE

AC COIL VOLTAGE CODES

VOLTAGE	12	24	48	110 / 120	208	220	230	240	277	400	400 ~ 415	480	500	550	600
50Hz	—	—	—	D	—	—	—	—	—	—	R	—	T	U	—
60Hz	—	—	—	D	L	—	—	F	P	—	—	R	—	—	T
50/60Hz	XB	XC	XJ	—	—	XAJ	XN	—	—	XAM	—	—	—	—	—

DC COIL VOLTAGE CODES

VOLTAGE	12	24	125	250	LIST
-S09 to -S25	ZB	ZC	ZQ	ZP	$ 35.00
-S32 to -S40	ZB	ZC	ZQ	ZP	$ 78.00

IV. CONTACTOR AUXILIARY CONTACT CONFIGURATION

CODE	DESCRIPTION	LIST
00	Without Auxiliary Contacts (Contactor Codes L & M)	—
10	1 Normally Open*	$ 18.00
01	1 Normally Closed*	$ 18.00

*NOTE: Integral right side mounted on Contactor Codes G, J & K, front mounted on Contactor Codes L & M.

V. MOTOR PROTECTION CIRCUIT BREAKER W/THERMAL AND MAGNETIC TRIP ELEMENTS

CODE	ADJUSTMENT RANGE (A)	MAGNETIC TRIP CURRENT (A)	INTERRUPT CURRENT (Icu) (kA) 400V	480V	MPCB CAT. NO.	LIST
FOR CONTACTOR CODE G & MOTOR SIZE <1/4HP						
01	0.10 ~ 0.16	2.1	100	100	330-T25S2C16	$122.00
02	0.16 ~ 0.25	3.3	100	100	330-T25S2C25	$122.00
03	0.25 ~ 0.40	5.2	100	100	330-T25S2C40	$132.00
04	0.40 ~ 0.63	8.2	100	100	330-T25S2C63	$136.00
05	0.63 ~ 1.0	13	100	100	330-T25S2D10	$139.00
FOR CONTACTOR CODE G & MOTOR SIZE 1/3HP						
06	1.0 ~ 1.6	21	100	100	330-T25S2D16	$139.00
FOR CONTACTOR CODE G & MOTOR SIZE 1/2HP						
07	1.6 ~ 2.5	33	100	100	330-T25S2D25	$139.00
FOR CONTACTOR CODE G & MOTOR SIZE 1HP						
08	2.5 ~ 4.0	52	100	100	330-T25S2D40	$139.00
FOR CONTACTOR CODE G & MOTOR SIZE 1-1/2HP						
09	4.0 ~ 6.3	82	100	100	330-T25S2D63	$148.00
FOR CONTACTOR CODE G & MOTOR SIZE 3HP						
10	6.3 ~ 10	130	100	42	330-T25S2U10	$154.00
FOR CONTACTOR CODE J & MOTOR SIZE 5HP						
11*	10 ~ 16	208	50	10	330-T25S2U16	$170.00
FOR CONTACTOR CODE K & MOTOR SIZE 5HP						
12*	16 ~ 20	260	50	10	330-T25S2U20	$185.00
FOR CONTACTOR CODE L & MOTOR SIZE 7-1/2HP						
13*	20 ~ 25	325	50	10	330-T25S2U25	$218.00
FOR CONTACTOR CODE M & MOTOR SIZE 10HP						
14*	25 ~ 32	416	50	10	330-T25S2U32	$218.00

*NOTE: Type F combination motor controller configuration only.

DISCOUNT SCHEDULE H

SEE OPPOSITE PAGE FOR PART BUILDER CHARTS VI – XI

ENCLOSED DOL STARTER PART BUILDER (CONT.)

VI. MOTOR PROTECTION CIRCUIT BREAKER ACCESSORIES

	FRONT MOUNT AUX., 1 NO + 1 NC	SIDE MOUNT AUX., 1 NO + 1 NC	SIDE MOUNT AUX., 2 NO	TRIP IND. AUX., 2 NO + 2 NC	LINE SIDE TERM. BARRIER	
CODE	330-FA11S25	330-SA11S25	330-SA20S25	330-STA22S25	330-LSTB25	LIST
18	—	—	—	1	1	$111.00
19	1	—	—	1	1	$132.00
20	—	1	—	1	1	$132.00
21	—	—	1	1	1	$132.00
22	1	1	—	1	1	$153.00
23	1	—	1	1	1	$153.00

VII. POLYCARBONATE ENCLOSURE DIMENSION (TYPE 4X & IP65)

CODE	FOR CONTACTOR CODES	DIMENSION REF. / H x W x D	LIST
G	AC and DC: G, J, K	1 / 255mm x 180mm x 177mm	$270.00
H	AC and DC: G, J, K, L, M	2 / 378mm x 188mm x 181mm	$648.00

VIII. MPCB EXTERNAL OPERATING HANDLE OPTIONS

CODE	DESCRIPTION	OPERATOR COLOR	BEZEL COLOR	LIST
(Blank)	None	—	—	—
GRY	Round (Type 1, 2, 3, 3R, 4/4X, 12, 13 and IP65)	Red	Yellow	$109.50
GBG	Round (Type 1, 2, 3, 3R, 4/4X, 12, 13 and IP65)	Black	Grey	$109.50

X. 22MM IEC UNIBODY PILOT LIGHT OPTIONS

CODE	DESCRIPTION	LED/LENS COLOR	CAT. NO.	LEGEND PLATE†
(Blank)	None	—	—	—
A	Non-Relampable	Amber	W22UNR-***LA-WNLA	FAULT
G	Non-Relampable	Green	W22UNR-***LG-WNLG	RUN
R	Non-Relampable	Red	W22UNR-***LR-WNLR	RUN

NOTE: † The legend plate face color is black with white letters.
*** Represents the Unibody pilot light voltage code. Voltage code will be based on the contactor coil voltage.

XI. WIRING OPTIONS

CODE	DESCRIPTION	FOR PILOT DEVICE CODES	FOR PILOT LIGHT CODES	WIRING DIAGRAM REF.‡	LIST
WW	Without Wiring	ALL	ALL	—	—
W2	Two Wire Control Wiring†	03, 04	(Blank), G*, R*	1a	$ 18.00
		04	A	1b	
		05, 06	(Blank), G*, R*	2a	
		06	A	2b	
W3	Three Wire Control Wiring*†◊	01, 02, 08, 09	(Blank), G, R	3a	$ 18.00
		02, 09	A	3b	

NOTE: * Contactor Auxiliary Contact Configuration Code 10 must be selected for this option.
† Motor protection circuit breaker front mounted auxiliary 330-FA11S25 must be used.
◊ Use W3 for Remote Wiring, refer to the installation instructions for details.
‡ For wiring diagrams go to www.c3controls.com.

IX. 22MM IEC PILOT DEVICE OPTIONS

CODE	DESCRIPTION	22MM CAT. NO.	LEGEND PLATE†	LIST
00	None	—	—	—
01	Momentary, Non-Illuminated Push Buttons:			$ 44.20
	Flush Green with 1NO Contact Block	W22PB-FG-10	START	
	Extended Red with 1NC Contact Block	W22PB-ER-01	STOP	
02	Momentary, Non-Illuminated Push Buttons with Pilot Light:			$ 63.20
	Flush Green with 1NO Contact Block	W22PB-FG-10	START	
	Extended Red with 1NC Contact Block	W22PB-ER-01	STOP	
	Unibody, Non-Relampable*	Refer to Chart X	Refer to Chart X	
03	Maintained, Non-Illuminated Selector Switch:			$ 27.20
	2-Position with 1NO Contact Block	W22S2-HW-10	OFF , ON	
04	Maintained, Non-Illuminated Selector Switch with Pilot Light:			$ 46.20
	2-Position with 1NO Contact Block	W22S2-HW-10	OFF , ON	
	Unibody, Non-Relampable*	Refer to Chart X	Refer to Chart X	
05	Maintained, Non-Illuminated Selector Switch:			$ 39.30
	3-Position with 2NO Contact Blocks	W22S3-HW-10/10	H , O , A	
06	Maintained, Non-Illuminated Selector Switch with Pilot Light:			$ 58.30
	3-Position with 2NO Contact Blocks	W22S3-HW-10/10	H , O , A	
	Unibody, Non-Relampable*	Refer to Chart X	Refer to Chart X	
07	Pilot Light:			$ 19.00
	Unibody, Non-Relampable*	Refer to Chart X	Refer to Chart X	
08	Momentary, Non-Illuminated Dual Push Buttons:			$ 40.20
	Extended Red (Bottom) with 1NC Contact Block and Flush Green (Top) with 1NO Contact Block	W22DPB-ERFG-01/10	—	
09	Momentary, Non-Illuminated Dual Push Buttons with Pilot Light:			$ 59.20
	Extended Red (Bottom) with 1NC Contact Block and Flush Green (Top) with 1NO Contact Block	W22DPB-ERFG-01/10	—	
	Unibody, Non-Relampable*	Refer to Chart X	Refer to Chart X	

NOTE: * Pilot lights only available if Contactor Coil Voltage Code (III) XC, D, XAJ, XN, F, ZC or ZQ is selected. Pilot light voltage will be 24V AC/DC, 110-130V AC/DC, or 220-240V AC to match contactor coil voltage.
† The legend plate face color is black with white letters.

SEE TOP OF PAGE FOR PART BUILDER CHARTS X – XI

IT'S EASY TO BUILD YOUR OWN ENCLOSED DOL STARTER

Simply pick the code number from each of the sections below and combine them to build your part number.

Enclosed Type E Direct-On-Line (DOL) Starters (FOR MOTOR VOLTAGE 240V)

E630 – ____ ____ ____ – ____ – ____ – ____ ____ – ____ ____ – ____

I II III IV V VI VII VIII IX X XI

Example: To build one of our most popular Enclosed DOL Starters, the part number would be
E630 + II + III + IV + V + VI + VII + VIII + IX + X + XI or **E630-GD10-10-23-HGRY-06R-W2**

DISCOVER E TYPE E

I. ENCLOSED STARTER TYPE

CODE	DESCRIPTION	LIST
E630	Enclosed Series 630 Type E DOL Starter: Series 330 MPCB + Series 300 Contactor	$198.00

II. NON-REVERSING CONTACTOR (3 NORMALLY OPEN POLES)

CODE	MAX. Ie (A) AC-3	MOTOR SIZE @ 240V 3 PHASE < 1/4HP	1/3HP	1/2HP	1HP	1-1/2HP	3HP	5HP	7-1/2HP	10HP	CONTACTOR CAT. NO. PREFIX	LIST
G	9	✔	✔	✔	✔	✔	✔	—	—	—	300-S09N30	$ 53.00
J	18	—	—	—	—	—	—	✔	—	—	300-S18N30	$ 87.00
K	25	—	—	—	—	—	—	—	✔	—	300-S25N30	$ 99.00
L	32	—	—	—	—	—	—	—	✔	—	300-S32N30	$130.00
M	40	—	—	—	—	—	—	—	—	✔	300-S40N30	$178.00

III. CONTACTOR COIL VOLTAGE CODE

AC COIL VOLTAGE CODES

VOLTAGE	12	24	48	110 / 120	208	220	230	240	277	400	400 ~ 415	480	500	550	600
50Hz	—	—	—	D	—	—	—	—	—	—	R	—	T	U	—
60Hz	—	—	—	D	L	—	—	F	P	—	—	R	—	—	T
50/60Hz	XB	XC	XJ	—	—	XAJ	XN	—	—	XAM	—	—	—	—	—

DC COIL VOLTAGE CODES

VOLTAGE	12	24	125	250	LIST
-S09 to -S25	ZB	ZC	ZQ	ZP	$ 35.00
-S32 to -S40	ZB	ZC	ZQ	ZP	$ 78.00

IV. CONTACTOR AUXILIARY CONTACT CONFIGURATION

CODE	DESCRIPTION	LIST
00	Without Auxiliary Contacts (Contactor Codes L & M)	—
10	1 Normally Open*	$ 18.00
01	1 Normally Closed*	$ 18.00

*NOTE: Integral right side mounted on Contactor Codes G, J & K, front mounted on Contactor Codes L&M.

V. MOTOR PROTECTION CIRCUIT BREAKER W/THERMAL AND MAGNETIC TRIP ELEMENTS

CODE	ADJUSTMENT RANGE (A)	MAGNETIC TRIP CURRENT (A)	INTERRUPT CURRENT (Icu) (kA) 400V	480V	MPCB CAT. NO.	LIST
FOR CONTACTOR CODE G & MOTOR SIZE <1/4HP						
01	0.10 ~ 0.16	2.1	100	100	330-T25S2C16	$122.00
02	0.16 ~ 0.25	3.3	100	100	330-T25S2C25	$122.00
03	0.25 ~ 0.40	5.2	100	100	330-T25S2C40	$132.00
04	0.40 ~ 0.63	8.2	100	100	330-T25S2C63	$136.00
05	0.63 ~ 1.0	13	100	100	330-T25S2D10	$139.00
FOR CONTACTOR CODE G & MOTOR SIZE 1/3HP						
06	1.0 ~ 1.6	21	100	100	330-T25S2D16	$139.00
FOR CONTACTOR CODE G & MOTOR SIZE 1/2HP						
07	1.6 ~ 2.5	33	100	100	330-T25S2D25	$139.00
FOR CONTACTOR CODE G & MOTOR SIZE 1HP						
08	2.5 ~ 4.0	52	100	100	330-T25S2D40	$139.00
FOR CONTACTOR CODE G & MOTOR SIZE 1-1/2HP						
09	4.0 ~ 6.3	82	100	100	330-T25S2D63	$148.00
FOR CONTACTOR CODE G & MOTOR SIZE 3HP						
10	6.3 ~ 10	130	100	42	330-T25S2U10	$154.00
FOR CONTACTOR CODE J & MOTOR SIZE 5HP						
11*	10 ~ 16	208	50	10	330-T25S2U16	$170.00
FOR CONTACTOR CODE K & MOTOR SIZE 7-1/2HP						
12*	16 ~ 20	260	50	10	330-T25S2U20	$185.00
FOR CONTACTOR CODE L & MOTOR SIZE 7-1/2HP						
13*	20 ~ 25	325	50	10	330-T25S2U25	$218.00
FOR CONTACTOR CODE M & MOTOR SIZE 10HP						
14*	25 ~ 32	416	50	10	330-T25S2U32	$218.00

*NOTE: Type F combination motor controller configuration only.

DISCOUNT SCHEDULE H

SEE OPPOSITE PAGE FOR PART BUILDER CHARTS VI – XI

ENCLOSED DOL STARTER PART BUILDER (CONT.)

VI. MOTOR PROTECTION CIRCUIT BREAKER ACCESSORIES

	FRONT MOUNT AUX., 1 NO + 1 NC	SIDE MOUNT AUX., 1 NO + 1 NC	SIDE MOUNT AUX., 2 NO	TRIP IND. AUX., 2 NO + 2 NC	LINE SIDE TERM. BARRIER	
CODE	330-FA11S25	330-SA11S25	330-SA20S25	330-STA22S25	330-LSTB25	LIST
18	—	—	—	1	1	$111.00
19	1	—	—	1	1	$132.00
20	—	1	—	1	1	$132.00
21	—	—	1	1	1	$132.00
22	1	1	—	1	1	$153.00
23	1	—	1	1	1	$153.00

VII. POLYCARBONATE ENCLOSURE DIMENSION (TYPE 4X & IP65)

CODE	FOR CONTACTOR CODES	DIMENSION REF. / H x W x D	LIST
G	AC and DC: G, J, K	1 / 255mm x 180mm x 177mm	$270.00
H	AC and DC: G, J, K, L, M	2 / 378mm x 188mm x 181mm	$648.00

VIII. MPCB EXTERNAL OPERATING HANDLE OPTIONS

CODE	DESCRIPTION	OPERATOR COLOR	BEZEL COLOR	LIST
(Blank)	None	—	—	—
GRY	Round (Type 1, 2, 3, 3R, 4/4X, 12, 13 and IP65)	Red	Yellow	$109.50
GBG	Round (Type 1, 2, 3, 3R, 4/4X, 12, 13 and IP65)	Black	Grey	$109.50

X. 22MM IEC UNIBODY PILOT LIGHT OPTIONS

CODE	DESCRIPTION	LED/LENS COLOR	CAT. NO.	LEGEND PLATE†
(Blank)	None	—	—	—
A	Non-Relampable	Amber	W22UNR-***LA-WNLA	FAULT
G	Non-Relampable	Green	W22UNR-***LG-WNLG	RUN
R	Non-Relampable	Red	W22UNR-***LR-WNLR	RUN

NOTE: † The legend plate face color is black with white letters.
*** Represents the Unibody pilot light voltage code. Voltage code will be based on the contactor coil voltage.

XI. WIRING OPTIONS

CODE	DESCRIPTION	FOR PILOT DEVICE CODES	FOR PILOT LIGHT CODES	WIRING DIAGRAM REF.‡	LIST
WW	Without Wiring	ALL	ALL	—	—
W2	Two Wire Control Wiring†	03, 04	(Blank), G*, R*	1a	$ 18.00
		04	A	1b	
		05, 06	(Blank), G*, R*	2a	
		06	A	2b	
W3	Three Wire Control Wiring*†◊	01, 02, 08, 09	(Blank), G, R	3a	$ 18.00
		02, 09	A	3b	

NOTE: * Contactor Auxiliary Contact Configuration Code 10 must be selected for this option.
† Motor protection circuit breaker front mounted auxiliary 330-FA11S25 must be used.
◊ Use W3 for Remote Wiring, refer to the installation instructions for details.
‡ For wiring diagrams go to www.c3controls.com.

IX. 22MM IEC PILOT DEVICE OPTIONS

CODE	DESCRIPTION	22MM CAT. NO.	LEGEND PLATE†	LIST
00	None	—	—	—
01	Momentary, Non-Illuminated Push Buttons:			$ 44.20
	Flush Green with 1NO Contact Block	W22PB-FG-10	START	
	Extended Red with 1NC Contact Block	W22PB-ER-01	STOP	
02	Momentary, Non-Illuminated Push Buttons with Pilot Light:			$ 63.20
	Flush Green with 1NO Contact Block	W22PB-FG-10	START	
	Extended Red with 1NC Contact Block	W22PB-ER-01	STOP	
	Unibody, Non-Relampable*	Refer to Chart X	Refer to Chart X	
03	Maintained, Non-Illuminated Selector Switch:			$ 27.20
	2-Position with 1NO Contact Block	W22S2-HW-10	OFF , ON	
04	Maintained, Non-Illuminated Selector Switch with Pilot Light:			$ 46.20
	2-Position with 1NO Contact Block	W22S2-HW-10	OFF , ON	
	Unibody, Non-Relampable*	Refer to Chart X	Refer to Chart X	
05	Maintained, Non-Illuminated Selector Switch:			$ 39.30
	3-Position with 2NO Contact Blocks	W22S3-HW-10/10	H , O , A	
06	Maintained, Non-Illuminated Selector Switch with Pilot Light:			$ 58.30
	3-Position with 2NO Contact Blocks	W22S3-HW-10/10	H , O , A	
	Unibody, Non-Relampable*	Refer to Chart X	Refer to Chart X	
07	Pilot Light:			$ 19.00
	Unibody, Non-Relampable*	Refer to Chart X	Refer to Chart X	
08	Momentary, Non-Illuminated Dual Push Buttons:			$ 40.20
	Extended Red (Bottom) with 1NC Contact Block and Flush Green (Top) with 1NO Contact Block	W22DPB-ERFG-01/10	—	
09	Momentary, Non-Illuminated Dual Push Buttons with Pilot Light:			$ 59.20
	Extended Red (Bottom) with 1NC Contact Block and Flush Green (Top) with 1NO Contact Block	W22DPB-ERFG-01/10	—	
	Unibody, Non-Relampable*	Refer to Chart X	Refer to Chart X	

NOTE: * Pilot lights only available if Contactor Coil Voltage Code (III) XC, D, XAJ, XN, F, ZC or ZQ is selected. Pilot light voltage will be 24V AC/DC, 110-130V AC/DC, or 220-240V AC to match contactor coil voltage.
† The legend plate face color is black with white letters.

SEE TOP OF PAGE FOR PART BUILDER CHARTS X – XI

IT'S EASY TO BUILD YOUR OWN ENCLOSED DOL STARTER

Simply pick the code number from each of the sections below and combine them to build your part number.

Enclosed Type E Direct-On-Line (DOL) Starters (FOR MOTOR VOLTAGE 480Y/277V)

E630 – ____ ____ ____ – ____ – ____ – ____ ____ – ____ ____ – ____

I II III IV V VI VII VIII IX X XI

Example: To build one of our most popular Enclosed DOL Starters, the part number would be
E630 + II + III + IV + V + VI + VII + VIII + IX + X + XI or **E630-GD10-10-23-HGRY-06R-W2**

DISCOVER E TYPE E

I. ENCLOSED STARTER TYPE

CODE	DESCRIPTION	LIST
E630	Enclosed Series 630 Type E DOL Starter: Series 330 MPCB + Series 300 Contactor	$198.00

II. NON-REVERSING CONTACTOR (3 NORMALLY OPEN POLES)

	MAX. Ie (A)	MOTOR SIZE @ 480V 3 PHASE										CONTACTOR	
CODE	AC-3	< 1/2HP	1/2HP	3/4HP	1-1/2HP	2HP	3HP	5HP	10HP	15HP	20HP	CAT. NO. PREFIX	LIST
G	9	✔	✔	✔	✔	✔	✔	✔	—	—	—	300-S09N30	$ 53.00
J	18	—	—	—	—	—	—	—	✔	—	—	300-S18N30	$ 87.00
K	25	—	—	—	—	—	—	—	—	✔	—	300-S25N30	$ 99.00
L	32	—	—	—	—	—	—	—	—	✔	—	300-S32N30	$130.00
M	40	—	—	—	—	—	—	—	—	—	✔	300-S40N30	$178.00

III. CONTACTOR COIL VOLTAGE CODE

AC COIL VOLTAGE CODES

VOLTAGE	12	24	48	110 / 120	208	220	230	240	277	400	400 ~ 415	480	500	550	600
50Hz	—	—	—	D	—	—	—	—	—	—	R	—	T	U	—
60Hz	—	—	—	D	L	—	—	F	P	—	—	R	—	—	T
50/60Hz	XB	XC	XJ	—	—	XAJ	XN	—	—	XAM	—	—	—	—	—

DC COIL VOLTAGE CODES

VOLTAGE	12	24	125	250	LIST
-S09 to -S25	ZB	ZC	ZQ	ZP	$ 35.00
-S32 to -S40	ZB	ZC	ZQ	ZP	$ 78.00

IV. CONTACTOR AUXILIARY CONTACT CONFIGURATION

CODE	DESCRIPTION	LIST
00	Without Auxiliary Contacts (Contactor Codes L & M)	—
10	1 Normally Open*	$ 18.00
01	1 Normally Closed*	$ 18.00

*NOTE: Integral right side mounted on Contactor Codes G, J & K, front mounted on Contactor Codes L & M.

V. MOTOR PROTECTION CIRCUIT BREAKER W/THERMAL AND MAGNETIC TRIP ELEMENTS

CODE	ADJUSTMENT RANGE (A)	MAGNETIC TRIP CURRENT (A)	INTERRUPT CURRENT (Icu) (kA) 400V	480V	MPCB CAT. NO.	LIST
FOR CONTACTOR CODE G & MOTOR SIZE <1/2HP						
01	0.10 ~ 0.16	2.1	100	100	330-T25S2C16	$122.00
02	0.16 ~ 0.25	3.3	100	100	330-T25S2C25	$122.00
03	0.25 ~ 0.40	5.2	100	100	330-T25S2C40	$132.00
04	0.40 ~ 0.63	8.2	100	100	330-T25S2C63	$136.00
FOR CONTACTOR CODE G & MOTOR SIZE 1/2HP						
05	0.63 ~ 1.0	13	100	100	330-T25S2D10	$139.00
FOR CONTACTOR CODE G & MOTOR SIZE 3/4HP						
06	1.0 ~ 1.6	21	100	100	330-T25S2D16	$139.00
FOR CONTACTOR CODE G & MOTOR SIZE 1-1/2HP						
07	1.6 ~ 2.5	33	100	100	330-T25S2D25	$139.00
FOR CONTACTOR CODE G & MOTOR SIZE 2HP						
08	2.5 ~ 4.0	52	100	100	330-T25S2D40	$139.00
FOR CONTACTOR CODE G & MOTOR SIZE 3HP						
09	4.0 ~ 6.3	82	100	100	330-T25S2D63	$148.00
FOR CONTACTOR CODE G & MOTOR SIZE 5HP						
10	6.3 ~ 10	130	100	42	330-T25S2U10	$154.00
FOR CONTACTOR CODE J & MOTOR SIZE 10HP						
11*	10 ~ 16	208	50	10	330-T25S2U16	$170.00
FOR CONTACTOR CODE K & MOTOR SIZE 15HP						
12*	16 ~ 20	260	50	10	330-T25S2U20	$185.00
FOR CONTACTOR CODE L & MOTOR SIZE 15HP						
13*	20 ~ 25	325	50	10	330-T25S2U25	$218.00
FOR CONTACTOR CODE M & MOTOR SIZE 20HP						
14*	25 ~ 32	416	50	10	330-T25S2U32	$218.00

*NOTE: Type F combination motor controller configuration only.

DISCOUNT SCHEDULE H

SEE OPPOSITE PAGE FOR PART BUILDER CHARTS VI – XI

ENCLOSED DOL STARTER PART BUILDER (CONT.)

VI. MOTOR PROTECTION CIRCUIT BREAKER ACCESSORIES

	FRONT MOUNT AUX., 1 NO + 1 NC	SIDE MOUNT AUX., 1 NO + 1 NC	SIDE MOUNT AUX., 2 NO	TRIP IND. AUX., 2 NO + 2 NC	LINE SIDE TERM. BARRIER	
CODE	330-FA11S25	330-SA11S25	330-SA20S25	330-STA22S25	330-LSTB25	LIST
18	—	—	—	1	1	$111.00
19	1	—	—	1	1	$132.00
20	—	1	—	1	1	$132.00
21	—	—	1	1	1	$132.00
22	1	1	—	1	1	$153.00
23	1	—	1	1	1	$153.00

VII. POLYCARBONATE ENCLOSURE DIMENSION (TYPE 4X & IP65)

CODE	FOR CONTACTOR CODES	DIMENSION REF. / H x W x D	LIST
G	AC and DC: G, J, K	1 / 255mm x 180mm x 177mm	$270.00
H	AC and DC: G, J, K, L, M	2 / 378mm x 188mm x 181mm	$648.00

VIII. MPCB EXTERNAL OPERATING HANDLE OPTIONS

CODE	DESCRIPTION	OPERATOR COLOR	BEZEL COLOR	LIST
(Blank)	None	—	—	—
GRY	Round (Type 1, 2, 3, 3R, 4/4X, 12, 13 and IP65)	Red	Yellow	$109.50
GBG	Round (Type 1, 2, 3, 3R, 4/4X, 12, 13 and IP65)	Black	Grey	$109.50

X. 22MM IEC UNIBODY PILOT LIGHT OPTIONS

CODE	DESCRIPTION	LED/LENS COLOR	CAT. NO.	LEGEND PLATE†
(Blank)	None	—	—	—
A	Non-Relampable	Amber	W22UNR-***LA-WNLA	FAULT
G	Non-Relampable	Green	W22UNR-***LG-WNLG	RUN
R	Non-Relampable	Red	W22UNR-***LR-WNLR	RUN

NOTE: † The legend plate face color is black with white letters.
*** Represents the Unibody pilot light voltage code. Voltage code will be based on the contactor coil voltage.

XI. WIRING OPTIONS

CODE	DESCRIPTION	FOR PILOT DEVICE CODES	FOR PILOT LIGHT CODES	WIRING DIAGRAM REF.‡	LIST
WW	Without Wiring	ALL	ALL	—	—
W2	Two Wire Control Wiring†	03, 04	(Blank), G*, R*	1a	$ 18.00
		04	A	1b	
		05, 06	(Blank), G*, R*	2a	
		06	A	2b	
W3	Three Wire Control Wiring*†◊	01, 02, 08, 09	(Blank), G, R	3a	$ 18.00
		02, 09	A	3b	

NOTE: * Contactor Auxiliary Contact Configuration Code 10 must be selected for this option.
† Motor protection circuit breaker front mounted auxiliary 330-FA11S25 must be used.
◊ Use W3 for Remote Wiring, refer to the installation instructions for details.
‡ For wiring diagrams go to www.c3controls.com.

IX. 22MM IEC PILOT DEVICE OPTIONS

CODE	DESCRIPTION	22MM CAT. NO.	LEGEND PLATE†	LIST
00	None	—	—	—
01	Momentary, Non-Illuminated Push Buttons:			$ 44.20
	Flush Green with 1NO Contact Block	W22PB-FG-10	START	
	Extended Red with 1NC Contact Block	W22PB-ER-01	STOP	
02	Momentary, Non-Illuminated Push Buttons with Pilot Light:			$ 63.20
	Flush Green with 1NO Contact Block	W22PB-FG-10	START	
	Extended Red with 1NC Contact Block	W22PB-ER-01	STOP	
	Unibody, Non-Relampable*	Refer to Chart X	Refer to Chart X	
03	Maintained, Non-Illuminated Selector Switch:			$ 27.20
	2-Position with 1NO Contact Block	W22S2-HW-10	OFF , ON	
04	Maintained, Non-Illuminated Selector Switch with Pilot Light:			$ 46.20
	2-Position with 1NO Contact Block	W22S2-HW-10	OFF , ON	
	Unibody, Non-Relampable*	Refer to Chart X	Refer to Chart X	
05	Maintained, Non-Illuminated Selector Switch:			$ 39.30
	3-Position with 2NO Contact Blocks	W22S3-HW-10/10	H , O , A	
06	Maintained, Non-Illuminated Selector Switch with Pilot Light:			$ 58.30
	3-Position with 2NO Contact Blocks	W22S3-HW-10/10	H , O , A	
	Unibody, Non-Relampable*	Refer to Chart X	Refer to Chart X	
07	Pilot Light:			$ 19.00
	Unibody, Non-Relampable*	Refer to Chart X	Refer to Chart X	
08	Momentary, Non-Illuminated Dual Push Buttons:			$ 40.20
	Extended Red (Bottom) with 1NC Contact Block and Flush Green (Top) with 1NO Contact Block	W22DPB-ERFG-01/10	—	
09	Momentary, Non-Illuminated Dual Push Buttons with Pilot Light:			$ 59.20
	Extended Red (Bottom) with 1NC Contact Block and Flush Green (Top) with 1NO Contact Block	W22DPB-ERFG-01/10	—	
	Unibody, Non-Relampable*	Refer to Chart X	Refer to Chart X	

NOTE: * Pilot lights only available if Contactor Coil Voltage Code (III) XC, D, XAJ, XN, F, ZC or ZQ is selected. Pilot light voltage will be 24V AC/DC, 110-130V AC/DC, or 220-240V AC to match contactor coil voltage.
† The legend plate face color is black with white letters.

SEE TOP OF PAGE FOR PART BUILDER CHARTS X – XI

IT'S EASY TO BUILD YOUR OWN ENCLOSED DOL STARTER

Simply pick the code number from each of the sections below and combine them to build your part number.

Enclosed Type E Direct-On-Line (DOL) Starters (FOR MOTOR VOLTAGE 600Y/347V)

E630 – ____ ____ ____ – ____ – ____ – ____ ____ – ____ ____ – ____

I II III IV V VI VII VIII IX X XI

Example: To build one of our most popular Enclosed DOL Starters, the part number would be
E630 + II + III + IV + V + VI + VII + VIII + IX + X + XI or E630-GD10-10-23-HGRY-06R-W2

DISCOVER E TYPE E

I. ENCLOSED STARTER TYPE

CODE	DESCRIPTION	LIST
E630	Enclosed Series 630 Type E DOL Starter: Series 330 MPCB + Series 300 Contactor	$198.00

II. NON-REVERSING CONTACTOR (3 NORMALLY OPEN POLES)

CODE	MAX. Ie (A) AC-3	MOTOR SIZE @ 600V 3 PHASE < 1/4HP	1/4HP	1/2HP	1HP	1-1/2HP	3HP	5HP	7-1/2HP	15HP	20HP	25HP	CONTACTOR CAT. NO. PREFIX	LIST
G	9	✔	✔	✔	✔	✔	✔	✔	✔	—	—	—	300-S09N30	$ 53.00
J	18	—	—	—	—	—	—	—	—	✔	—	—	300-S18N30	$ 87.00
K	25	—	—	—	—	—	—	—	—	✔	—	—	300-S25N30	$ 99.00
L	32	—	—	—	—	—	—	—	—	—	✔	—	300-S32N30	$130.00
M	40	—	—	—	—	—	—	—	—	—	—	✔	300-S40N30	$178.00

III. CONTACTOR COIL VOLTAGE CODE

AC COIL VOLTAGE CODES

VOLTAGE	12	24	48	110 / 120	208	220	230	240	277	400	400 ~ 415	480	500	550	600
50Hz	—	—	—	D	—	—	—	—	—	—	R	—	T	U	—
60Hz	—	—	—	D	L	—	—	F	P	—	—	R	—	—	T
50/60Hz	XB	XC	XJ	—	—	XAJ	XN	—	—	XAM	—	—	—	—	—

DC COIL VOLTAGE CODES

VOLTAGE	12	24	125	250	LIST
-S09 to -S25	ZB	ZC	ZQ	ZP	$ 35.00
-S32 to -S40	ZB	ZC	ZQ	ZP	$ 78.00

IV. CONTACTOR AUXILIARY CONTACT CONFIGURATION

CODE	DESCRIPTION	LIST
00	Without Auxiliary Contacts (Contactor Codes L & M)	—
10	1 Normally Open*	$ 18.00
01	1 Normally Closed*	$ 18.00

*NOTE: Integral right side mounted on Contactor Codes G, J & K, front mounted on Contactor Codes L & M.

V. MOTOR PROTECTION CIRCUIT BREAKER W/THERMAL AND MAGNETIC TRIP ELEMENTS

CODE	ADJUSTMENT RANGE (A)	MAGNETIC TRIP CURRENT (A)	INTERRUPT CURRENT (Icu) (kA) 400V	480V	MPCB CAT. NO.	LIST
FOR CONTACTOR CODE G & MOTOR SIZE <1/4HP						
01	0.10 ~ 0.16	2.1	100	100	330-T25S2C16	$122.00
02	0.16 ~ 0.25	3.3	100	100	330-T25S2C25	$122.00
04	0.40 ~ 0.63	5.2	100	100	330-T25S2C63	$136.00
FOR CONTACTOR CODE G & MOTOR SIZE 1/4HP						
03	0.25 ~ 0.40	8.2	100	100	330-T25S2C40	$132.00
FOR CONTACTOR CODE G & MOTOR SIZE 1/2HP						
05	0.63 ~ 1.0	13	100	100	330-T25S2D10	$139.00
FOR CONTACTOR CODE G & MOTOR SIZE 1HP						
06	1.0 ~ 1.6	21	100	100	330-T25S2D16	$139.00
FOR CONTACTOR CODE G & MOTOR SIZE 1-1/2HP						
07	1.6 ~ 2.5	33	100	100	330-T25S2D25	$139.00
FOR CONTACTOR CODE G & MOTOR SIZE 3HP						
08	2.5 ~ 4.0	52	100	100	330-T25S2D40	$139.00
FOR CONTACTOR CODE G & MOTOR SIZE 5HP						
09	4.0 ~ 6.3	82	100	100	330-T25S2D63	$148.00
FOR CONTACTOR CODE G & MOTOR SIZE 7-1/2HP						
10	6.3 ~ 10	130	100	42	330-T25S2U10	$154.00
FOR CONTACTOR CODE J & MOTOR SIZE 15HP						
11*	10 ~ 16	208	50	10	330-T25S2U16	$170.00
FOR CONTACTOR CODE K & MOTOR SIZE 15HP						
12*	16 ~ 20	260	50	10	330-T25S2U20	$185.00
FOR CONTACTOR CODE L & MOTOR SIZE 20HP						
13*	20 ~ 25	325	50	10	330-T25S2U25	$218.00
FOR CONTACTOR CODE M & MOTOR SIZE 25HP						
14*	25 ~ 32	416	50	10	330-T32S2U25	$218.00

*NOTE: Type F combination motor controller configuration only.

DISCOUNT SCHEDULE H

SEE OPPOSITE PAGE FOR PART BUILDER CHARTS VI – XI

ENCLOSED DOL STARTER PART BUILDER (CONT.)

VI. MOTOR PROTECTION CIRCUIT BREAKER ACCESSORIES

	FRONT MOUNT AUX., 1 NO + 1 NC	SIDE MOUNT AUX., 1 NO + 1 NC	SIDE MOUNT AUX., 2 NO	TRIP IND. AUX., 2 NO + 2 NC	LINE SIDE TERM. BARRIER	
CODE	330-FA11S25	330-SA11S25	330-SA20S25	330-STA22S25	330-LSTB25	LIST
18	—	—	—	1	1	$111.00
19	1	—	—	1	1	$132.00
20	—	1	—	1	1	$132.00
21	—	—	1	1	1	$132.00
22	1	1	—	1	1	$153.00
23	1	—	1	1	1	$153.00

VII. POLYCARBONATE ENCLOSURE DIMENSION (TYPE 4X & IP65)

CODE	FOR CONTACTOR CODES	DIMENSION REF. / H x W x D	LIST
G	AC and DC: G, J, K	1 / 255mm x 180mm x 177mm	$270.00
H	AC and DC: G, J, K, L, M	2 / 378mm x 188mm x 181mm	$648.00

VIII. MPCB EXTERNAL OPERATING HANDLE OPTIONS

CODE	DESCRIPTION	OPERATOR COLOR	BEZEL COLOR	LIST
(Blank)	None	—	—	—
GRY	Round (Type 1, 2, 3, 3R, 4/4X, 12, 13 and IP65)	Red	Yellow	$109.50
GBG	Round (Type 1, 2, 3, 3R, 4/4X, 12, 13 and IP65)	Black	Grey	$109.50

X. 22MM IEC UNIBODY PILOT LIGHT OPTIONS

CODE	DESCRIPTION	LED/LENS COLOR	CAT. NO.	LEGEND PLATE†
(Blank)	None	—	—	—
A	Non-Relampable	Amber	W22UNR-***LA-WNLA	FAULT
G	Non-Relampable	Green	W22UNR-***LG-WNLG	RUN
R	Non-Relampable	Red	W22UNR-***LR-WNLR	RUN

NOTE: † The legend plate face color is black with white letters.
*** Represents the Unibody pilot light voltage code. Voltage code will be based on the contactor coil voltage.

XI. WIRING OPTIONS

CODE	DESCRIPTION	FOR PILOT DEVICE CODES	FOR PILOT LIGHT CODES	WIRING DIAGRAM REF.‡	LIST
WW	Without Wiring	ALL	ALL	—	—
W2	Two Wire Control Wiring†	03, 04	(Blank), G*, R*	1a	$ 18.00
		04	A	1b	
		05, 06	(Blank), G*, R*	2a	
		06	A	2b	
W3	Three Wire Control Wiring*†◊	01, 02, 08, 09	(Blank), G, R	3a	$ 18.00
		02, 09	A	3b	

NOTE: * Contactor Auxiliary Contact Configuration Code 10 must be selected for this option.
† Motor protection circuit breaker front mounted auxiliary 330-FA11S25 must be used.
◊ Use W3 for Remote Wiring, refer to the installation instructions for details.
‡ For wiring diagrams go to www.c3controls.com.

IX. 22MM IEC PILOT DEVICE OPTIONS

CODE	DESCRIPTION	22MM CAT. NO.	LEGEND PLATE†	LIST
00	None	—	—	—
01	Momentary, Non-Illuminated Push Buttons:			$ 44.20
	Flush Green with 1NO Contact Block	W22PB-FG-10	START	
	Extended Red with 1NC Contact Block	W22PB-ER-01	STOP	
02	Momentary, Non-Illuminated Push Buttons with Pilot Light:			$ 63.20
	Flush Green with 1NO Contact Block	W22PB-FG-10	START	
	Extended Red with 1NC Contact Block	W22PB-ER-01	STOP	
	Unibody, Non-Relampable*	Refer to Chart X	Refer to Chart X	
03	Maintained, Non-Illuminated Selector Switch:			$ 27.20
	2-Position with 1NO Contact Block	W22S2-HW-10	OFF , ON	
04	Maintained, Non-Illuminated Selector Switch with Pilot Light:			$ 46.20
	2-Position with 1NO Contact Block	W22S2-HW-10	OFF , ON	
	Unibody, Non-Relampable*	Refer to Chart X	Refer to Chart X	
05	Maintained, Non-Illuminated Selector Switch:			$ 39.30
	3-Position with 2NO Contact Blocks	W22S3-HW-10/10	H , O , A	
06	Maintained, Non-Illuminated Selector Switch with Pilot Light:			$ 58.30
	3-Position with 2NO Contact Blocks	W22S3-HW-10/10	H , O , A	
	Unibody, Non-Relampable*	Refer to Chart X	Refer to Chart X	
07	Pilot Light:			$ 19.00
	Unibody, Non-Relampable*	Refer to Chart X	Refer to Chart X	
08	Momentary, Non-Illuminated Dual Push Buttons:			$ 40.20
	Extended Red (Bottom) with 1NC Contact Block and Flush Green (Top) with 1NO Contact Block	W22DPB-ERFG-01/10	—	
09	Momentary, Non-Illuminated Dual Push Buttons with Pilot Light:			$ 59.20
	Extended Red (Bottom) with 1NC Contact Block and Flush Green (Top) with 1NO Contact Block	W22DPB-ERFG-01/10	—	
	Unibody, Non-Relampable*	Refer to Chart X	Refer to Chart X	

NOTE: * Pilot lights only available if Contactor Coil Voltage Code (III) XC, D, XAJ, XN, F, ZC or ZQ is selected. Pilot light voltage will be 24V AC/DC, 110-130V AC/DC, or 220-240V AC to match contactor coil voltage.
† The legend plate face color is black with white letters.

SEE TOP OF PAGE FOR PART BUILDER CHARTS X – XI

Specifications:

SERIES E630 ENCLOSED DIRECT-ON-LINE (DOL) STARTER SPECIFICATIONS							
		STARTER CURRENT RATING CODE					
	UNITS	G	H	J	K	L	M
ELECTRICAL GENERAL		For detailed contactor specifications by starter rating code, see Section 4 Page 13					
		For detailed motor protection circuit breaker specifications by catalog number, see Section 9 Page 13					
Rated Operating Frequency	Hz	50/60					
Rated Control Frequencies	Hz	AC: 50Hz, 60Hz, 50/60Hz and DC					
ELECTRICAL UL/CSA APPLICATIONS		For detailed contactor specifications by starter rating code, see Section 4 Page 13					
		For detailed motor protection circuit breaker specifications by catalog number, see Section 9 Page 13					
Rated Operating Voltage, Ue	VAC	600					
Short Circuit Current Rating @ 480V AC	kA	50					
Maximum Fuse or Circuit Breaker Size	A	450					
Short Circuit Current Rating @ 600V AC	kA	25					
Maximum Fuse or Circuit Breaker Size	A	450					
ELECTRICAL IEC APPLICATIONS		For detailed contactor specifications by starter rating code, see Section 4 Page 13					
		For detailed motor protection circuit breaker specifications by catalog number, see Section 9 Page 14					
Rated Insulation Voltage, Ui	V	690					
Rated Impulse Voltage, Uimp	kV	6					
Rated Operating Voltage, Ue	VAC	690					
COIL CHARACTERISTICS		For detailed contactor specifications by starter rating code, see Section 4 Page 14					
Rated Insulation Voltage, Ui	V	1,000					
Operating Limits		80 ~ 110% of Rated Coil Voltage					
MECHANICAL		For detailed contactor specifications by starter rating code, see Section 4 Page 15					
		For detailed motor protection circuit breaker specifications by catalog number, see Section 9 Page 14					
ENVIRONMENTAL		For detailed contactor specifications by starter rating code, see Section 4 Page 15					
		For detailed motor protection circuit breaker specifications by catalog number, see Section 9 Page 14					
Ambient Operating Temperature	°C / °F	-20 to +55 / -4 to +131					
Ambient Storage Temperature	°C / °F	-50 to +80 / -58 to +176					
Altitude	m / ft.	2,000 / 6,562					
Environmental Protection Ratings							
Main Terminals (with conductors connected)		IP20					
Coil Terminals		IP20					
Auxiliary Contact Terminals		IP20					
Operating Handle							
Code G		Type 1, 2, 3, 3R, 4/4X, 12, 13, and IP65					
Enclosure							
Codes G, H		Type 1, 4/4X and IP66					
Pilot Devices		Type 1, 2, 3, 3R, 4/4X, 12, 13 and IP65					
CONSTRUCTION - GENERAL		For detailed contactor specifications by starter rating code, see Section 4 Page 15					
		For detailed motor protection circuit breaker specifications by catalog number, see Section 9 Page 15					
Number of Poles		3					
Pollution Degree		3					
Trip Class		10					
MATERIALS							
Pilot Devices		For detailed 22mm IEC pilot device specifications, see Section 15 Page 48					
Enclosure		Polycarbonate					
ROHS COMPLIANCE		For RoHS compliance documentation by product, refer to www.c3controls.com					

ENCLOSED DOL STARTER ASSEMBLIES: ENCLOSURE TYPE "G" - DIMENSION REF. 1

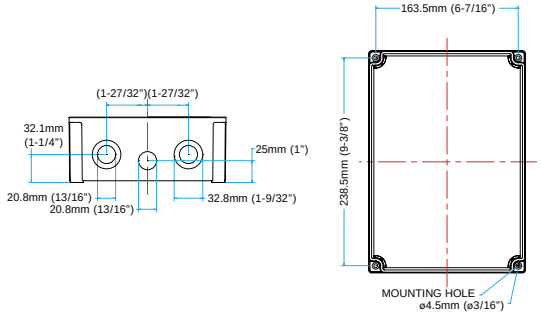

(SHOWN WITH MPCB, CONTACTOR, DISCONNECT SWITCH, PILOT LIGHT AND 2 PUSH BUTTONS)

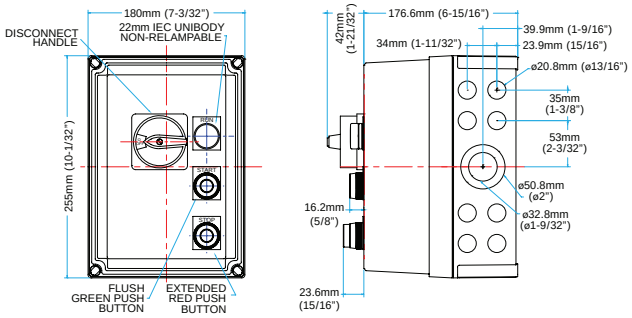

(SHOWN WITH MPCB, CONTACTOR, DISCONNECT SWITCH, PILOT LIGHT AND SELECTOR SWITCH)

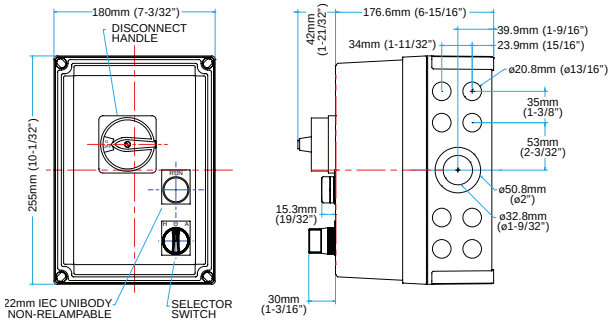

ENCLOSED DOL STARTER ASSEMBLIES: ENCLOSURE TYPE "H" - DIMENSION REF. 2

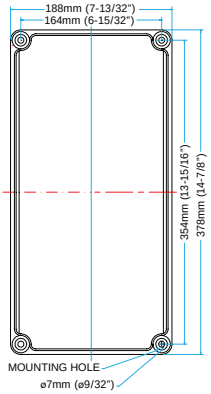

(SHOWN WITH MPCB, CONTACTOR, DISCONNECT SWITCH, PILOT LIGHT AND 2 PUSH BUTTONS)

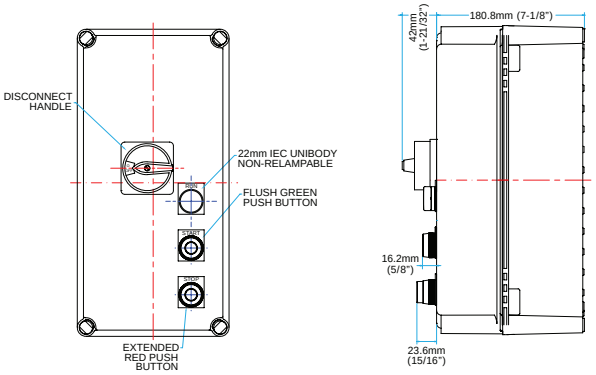

(SHOWN WITH MPCB, CONTACTOR, DISCONNECT SWITCH, PILOT LIGHT AND SELECTOR SWITCH)

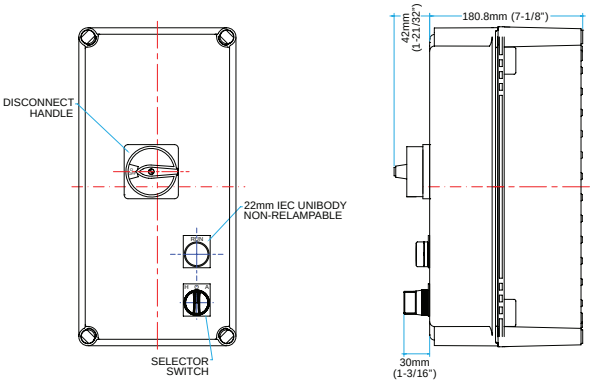

NOTE: All dimensions are approximations, actual size may vary slightly. Visit www.c3controls.com to download CAD drawings.

ENCLOSED UL508A COMBINATION MOTOR STARTERS

c3controls' Series ECP-300 Enclosed UL508A Combination Motor Starters come with all the features and benefits of our Series 330 Motor Protection Circuit Breaker, Series 300 Contactor, Series 1100 UL 489 Branch Circuit Breaker, and 22mm IEC pilot devices with the added protection of our durable Polycarbonate or Carbon Steel enclosures. Our Series ECP-300 combination motor starters are factory wired with a control transformer saving you time and reducing installation costs.

Section 30

Enclosed UL508A Combination Motor Starters	4
Accessories and Replacement Parts	6
Specifications	9
Dimensions	11

PROVEN

Conformity to Standards:

MOTOR PROTECTION CIRCUIT BREAKERS
UL 508, 60947-4-1A
CSA C22.2 No. 14
IEC 60947-1, 60947-4-1

CONTACTORS
UL 508, 60947-4-1A
CSA C22.2 No. 14
IEC 60947-1, 60947-4-1

ENCLOSURES
UL 50
CSA C22.2 No. 94
IEC 60529

Certifications:

UL File #: E187641 (Guide NLRV, NLRV7), E312106 (Guide NKJH, NKJH7)

CE Marked (per EU Low Voltage Directive 2014/35/EU and RoHS Directive 2015/863/EU)

UL File #: E236197 (Guide NLDX, NLDX7), E68568 (Guide NKCR, NKCR7)

CE Marked (per EU Low Voltage Directive 2014/35/EU and RoHS Directive 2015/863/EU)

UL Listed
CSA Certified

Visit c3controls.com to download product certifications.

NOTE: The scope (range, description, price, specifications, dimensions, etc.) of the product featured in this section is subject to change without notice. Refer to c3controls.com for product updates.

ENCLOSED UL508A COMBINATION MOTOR STARTERS

All our products are fully certified, rated, and backed by our limited lifetime warranty to meet the needs of the machine builder, and our Enclosed Combination Motor Starters are no exception. Check out the incredible features in the chart below!

DELIVERING SUPERIOR PRODUCT QUALITY AND MANUFACTURING EXCELLENCE	
✓ **Proven**	Our Series ECP-300 Enclosed UL508A Combination Motor Starters are UL508A Listed and CE marked meeting global standards requirements.
✓ **Enclosure Flexibility**	Our ECP-300 Enclosed UL508A Motor Starters are available in Polycarbonate (Type 4X) and two versions of Carbon Steel (Type 1 or Type 3R, 4).
✓ **Reliable**	Contactor provides repeated ON/OFF switching for the motor, and the motor protection circuit breaker includes both a Class 10 thermal and magnetic trip elements for overload and short circuit protection of the motor and motor branch circuit conductors.
✓ **Enhanced Integration**	Our ECP-300 Enclosed UL508A Motor Starters are pre-wired to accept inputs from your BAS, PLC, relay or other dry contact for control in Auto mode.
✓ **Simple Solution**	c3controls' Electrical Engineers have designed enclosed combination motor starters specifically for any electric impeller, fan, pump, conveyor, or air handling motor applications.
✓ **Limited Lifetime Warranty***	Every product is backed by our limited lifetime warranty—unmatched in the industry—bringing you quality components that perform in the most demanding applications.
✓ **Quick Shipment**	We assemble, test and ship within 5 days,—and confirm every order ensuring accuracy.
✓ **Advantage Pricing**	Our approach to product development, manufacturing, and focus on servicing the OEM and Electrical Equipment Builder reduces cost. The result—the best value in the industry.

*See c3controls Terms & Conditions

Polycarbonate Enclosure

Carbon Steel Enclosure

UNIQUE PRODUCT LINE FEATURES

FACTORY ASSEMBLED AND WIRED

Factory assembled and wired starters and pilot devices provide the convenience of a single catalog number and shorter control panel bill of material.

SELF-PROTECTED

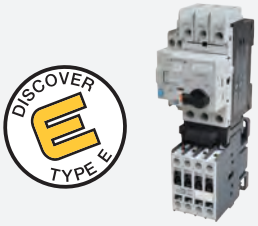

Listed as a UL 60947-4-1A Type E Self-Protected Combination Manual Motor Controller for circuits capable of delivering up to 10kA @ 600V.

PRE-WIRED CONTROL CIRCUIT

Pre-wired for quick and easy field installation, including color-coded and marked terminal blocks, control transformer, and controls circuit protection for simplicity of control circuit voltage, 24VAC or 120VAC options available.

ADJUSTABLE CURRENT SETTING

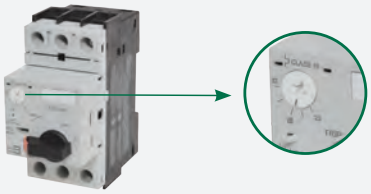

Full load current adjustment ratio enables overload relay to be set to exact FLA of motor. Provides phase protection for the motor against overload currents.

INTEGRATION READY

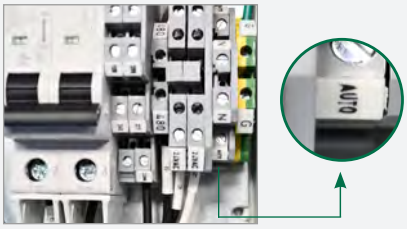

The integration ready Hand-Off-Auto control circuit is pre-wired to accept Auto Run, On / Off commands from your BAS, PLC, relay or other dry contact for remote control in Auto mode.

FIND IT FAST

Enclosed UL508A Combination Motor Starters

- Certifications
- Specifications
- Dimension Drawings
- Installation Instructions
- Easy to Buy

c3controls.com

IT'S EASY TO BUILD YOUR OWN ENCLOSED UL508A STARTER

Simply pick the code number from each of the sections below and combine them to build your part number.

Enclosed UL508A Combination Motor Starter

ECP - 300 - _____ - _____ - _____
I II III IV V

Example: To build one of our most popular Enclosed UL508A Combination Starters, the part number would be
ECP + 300 + III + IV + V or **ECP-300-2D63-M4-UXC**

I. PRODUCT SERIES

CODE	DESCRIPTION
ECP	Series ECP, Engineered Control Panel

II. PRODUCT TYPE

CODE	DESCRIPTION	LIST
300	Enclosed UL508A Combination Motor Starter	$1,012.50

III. MOTOR STARTER SIZE

CODE	RATED OPERATING CURRENT (A)	ADJUSTMENT RANGE (A)	MAGNETIC TRIP CURRENT (A)	1 PHASE HP** (60HZ)		3 PHASE HP** (60HZ)				LIST
				115V	230V	200V	230V	460V	575V	
2C16	0.16	0.1 ~ 0.16	2.1	—	—	—	—	—	—	—
2C25	0.25	0.16 ~ 0.25	3.3	—	—	—	—	—	—	—
2C40	0.40	0.25 ~ 0.4	5.2	—	—	—	—	—	—	—
2C63	0.63	0.4 ~ 0.63	8.2	—	—	—	—	—	1/4	—
2D10	1.0	0.63 ~ 1.0	13	—	—	—	—	1/2	1/2	—
2D16	1.6	1.0 ~ 1.6	21	—	1/10	1/4	1/3	3/4	1	—
2D25	2.5	1.6 ~ 2.5	33	—	1/6	1/2	1/2	1-1/2	1-1/2	—
2D40	4.0	2.5 ~ 4.0	52	1/8	1/3	3/4	1	2	3	—
2D63	6.3	4.0 ~ 6.3	82	1/4	3/4	1-1/2	1-1/2	3	5	—
2U10	10	6.3 ~ 10	130	1/2	1-1/2	3	3	7-1/2	10	—
2U16	16	10 ~ 16	208	1	3	5	5	10	15	—
2U20	20	16 ~ 20	260	1-1/2	3	5	7-1/2	15	20	$ 56.25
2U25	25	20 ~ 25	325	2	3	7-1/2	7-1/2	15	20	$112.50
2U32	32	25 ~ 32	416	3	5	10	10	20	25	$168.75

**Note: HP ratings shown in the table above are for reference. The final selection of the motor starter must be based on the actual motor full load current.

IV. ENCLOSURE

CODE	MATERIAL	ENVIRONMENTAL RATING	DIMENSIONS (HXWXD)	LIST
P4X	Polycarbonate	Type 1, 4/4X, and IP66	14-7/8" x 7-13/32" x 7-1/8"	—
M1	Carbon Steel, ANSI-61 grey powder coating inside and out	Type 1	14" x 12" x 8"	$281.25
M4	Carbon Steel, ANSI-61 grey powder coating inside and out	Type 3R, 4, & 12	14" x 12" x 8"	$506.25

V. PRIMARY/SECONDARY VOLTAGE

CODE	DESCRIPTION		LIST
	PRIMARY MOTOR VOLTAGE	SECONDARY CONTROL VOLTAGE	
UXC	480 VAC	24 VAC	—
	277 VAC		
	240 VAC		
	208 VAC		
	120 VAC		
UD	480 VAC	120 VAC	$18.00
	277 VAC		
	240 VAC		
	208 VAC		
CD	600 VAC	120 VAC	$24.00
	575 VAC		
	550 VAC		

DISCOUNT SCHEDULE **H**

Enclosed UL508A E630 Combination Motor Starters

c3controls Series ECP-300 Enclosed UL508A Combination Motor Starters are assembled from our Series 330 Motor Protection Circuit Breaker, Series 300 Contactor, Series 1100 489 Branch Circuit Breaker, and 22mm IEC pilot devices, all within the protection of a durable Polycarbonate or Carbon Steel enclosure. Our Series ECP-300 combination motor starters are factory wired with a control transformer saving you time and reducing installation costs.

Product features include:

- Enclosed combination motor starters offer the convenience of a single catalog number.
- Provides the same great features and benefits as our Enclosures, Series 330 Motor Protection Circuit Breakers, Series 300 Contactors, Series 1100 UL 489 Branch Circuit Breakers, and Series 22mm IEC Pilot Devices.
- Polycarbonate enclosure comes with a lift-off cover and is rated Type 4X.
- Carbon Steel enclosure comes in two versions; Type 1 or Type 3R, 4.
- Integration ready control circuit comes equipped with a Hand-Off-Auto selector switch and pre-wired connection points to accept Auto Run, On / Off commands from your BAS, PLC, relay or other dry contact for remote operation in Auto mode.
- Red/Yellow operating handle can be padlocked in the OFF position with up to three padlocks for extra safety and security needed during maintenance activities.
- Unobstructed access to the two contactor coil terminals on the load-side of the starter makes control circuit wiring simple.
- Compact starter size reduces enclosure size resulting in space savings and lower installed costs.
- Single phase sensitivity to protect motors against damaging phase loss conditions.
- Universal ratings and markings: A, kW, and HP ratings as well as applicable 3rd party certifications.

REPLACEMENT PARTS			
FOR USE WITH	**REPLACEMENT ITEM NUMBER**	**DESCRIPTION**	**LIST**
MPCB EXTERNAL OPERATING HANDLE KIT			
Polycarbonate Enclosure ECP-300- ### - P4X- ##	330-S2PHGRY03-P4X	MPCB External Operating Handle - Red Handle & Yellow Coupler with Shaft Assembly, use with Polycarbonate (P4X) enclosure	$ 75.00
Carbon Steel Enclosure ECP-300- ### - M1- ## ECP-300- ### - M4- ##	330-S2PHGRY03-M4	MPCB External Operating Handle - Red Handle & Yellow Coupler with Shaft Assembly, use with Metal (M4 / M1) enclosure	$ 75.00
MINIATURE CIRCUIT BREAKER			
All ECP-300 products	1100-CB2D2D10	Miniature Circuit Breaker, 2 Pole, 1A, Trip Curve D, UL 489	$ 116.00
LEGEND PLATE			
All ECP-300 products	LP-ECP-107	Legend Plate, ECP-300, H-O-A	$ 45.00
PILOT LIGHT			
ECP-300- ### - ## - CD ECP-300- ### - ## - UD	W22UNR-120LR-WNLR	22mm IEC Unibody Non-Relampable LED Light, 120V AC/DC, Red LED, Red UNR Lens	$ 15.00
ECP-300- ### - ## - CD ECP-300- ### - ## - UD	W22UNR-120LA-WNLA	22mm IEC Unibody Non-Relampable LED Light, 120V AC/DC, Amber LED, Amber UNR Lens	$ 15.00
ECP-300- ### - ## - UXC	W22UNR-24LR-WNLR	22mm IEC Unibody Non-Relampable LED Light, 24V AC/DC, Red LED, Red UNR Lens	$ 15.00
ECP-300- ### - ## - UXC	W22UNR-24LA-WNLA	22mm IEC Unibody Non-Relampable LED Light, 24V AC/DC, Amber LED, Amber UNR Lens	$ 15.00
SELECTOR SWITCH			
All ECP-300 products	W22S3-HW-10/10	22mm IEC Selector Switch, 3 Position, White Handle, 1NO / 1NO	$ 31.30
CONTACTOR COIL, 120V AC 60HZ			
ECP-300-2C16 to 2U25 - ## - CD ECP-300-2C16 to 2U25 - ## - UD	ACS25D	Contactor Coil, 120V AC 60Hz for use with contactors S09, S12, S18, S25	$ 26.00
ECP-300-2U32 - ## - CD ECP-300-2U32 - ## - UD	ACS40D	Contactor Coil, 120V AC 60Hz for use with contactors S32, S40	$ 30.00
CONTACTOR COIL, 24V AC 50/60HZ			
ECP-300-2C16 to 2U25 - ## - UXC	ACS25XC	Contactor Coil, 24V AC 50/60Hz for use with contactors S09, S12, S18, S25	$ 26.00
ECP-300-2U32 - ## - UXC	ACS40XC	Contactor Coil, 24V AC 50/60Hz for use with contactors S32, S40	$ 30.00

REPLACEMENT PARTS			
FOR USE WITH	REPLACEMENT ITEM NUMBER	DESCRIPTION	LIST
STARTER KIT: MPCB + CONTACTOR WITH AUXILIARY CONTACTS AND TERMINAL BARRIER, 120V 60HZ/ 110V 50HZ COIL VOLTAGE			
ECP-300-2C16- ## - UD ECP-300-2C16- ## - CD	630-S18D10-2C16-F11-T22-L	Series 630 Direct-On-Line Starter (DOL) 3P 18A Non-Reversing Contactor, 120V 60Hz/ 110V 50Hz Coil, 1NO Aux Contact, 0.1 ~ 0.16A MPCB with 1NO/1NC Front Mounted Aux Contact, 2NO/2NC Trip Indicating Aux Contact, LSTB	$ 417.00
ECP-300-2C25-## - UD ECP-300-2C25-## - CD	630-S18D10-2C25-F11-T22-L	Series 630 Direct-On-Line Starter (DOL) 3P 18A Non-Reversing Contactor, 120V 60Hz/ 110V 50Hz Coil, 1NO Aux Contact, 0.16 ~ 0.25A MPCB with 1NO/1NC Front Mounted Aux Contact, 2NO/2NC Trip Indicating Aux Contact, LSTB	$ 417.00
ECP-300-2C40-## - UD ECP-300-2C40-## - CD	630-S18D10-2C40-F11-T22-L	Series 630 Direct-On-Line Starter (DOL) 3P 18A Non-Reversing Contactor, 120V 60Hz/ 110V 50Hz Coil, 1NO Aux Contact, 0.25 ~ 0.4A MPCB with 1NO/1NC Front Mounted Aux Contact, 2NO/2NC Trip Indicating Aux Contact, LSTB	$ 427.00
ECP-300-2C63-## - UD ECP-300-2C63-## - CD	630-S18D10-2C63-F11-T22-L	Series 630 Direct-On-Line Starter (DOL) 3P 18A Non-Reversing Contactor, 120V 60Hz/ 110V 50Hz Coil, 1NO Aux Contact, 0.4 ~ 0.63A MPCB with 1NO/1NC Front Mounted Aux Contact, 2NO/2NC Trip Indicating Aux Contact, LSTB	$ 431.00
ECP-300-2D10- ## - UD ECP-300-2D10- ## - CD	630-S18D10-2D10-F11-T22-L	Series 630 Direct-On-Line Starter (DOL) 3P 18A Non-Reversing Contactor, 120V 60Hz/ 110V 50Hz Coil, 1NO Aux Contact, 0.63 ~ 1.0A MPCB with 1NO/1NC Front Mounted Aux Contact, 2NO/2NC Trip Indicating Aux Contact, LSTB	$ 434.00
ECP-300-2D16- ## - UD ECP-300-2D16- ## - CD	630-S18D10-2D16-F11-T22-L	Series 630 Direct-On-Line Starter (DOL) 3P 18A Non-Reversing Contactor, 120V 60Hz/ 110V 50Hz Coil, 1NO Aux Contact, 1.0 ~ 1.6A MPCB with 1NO/1NC Front Mounted Aux Contact, 2NO/2NC Trip Indicating Aux Contact, LSTB	$ 434.00
ECP-300-2D25- ## - UD ECP-300-2D25- ## - CD	630-S18D10-2D25-F11-T22-L	Series 630 Direct-On-Line Starter (DOL) 3P 18A Non-Reversing Contactor, 120V 60Hz/ 110V 50Hz Coil, 1NO Aux Contact, 1.6 ~ 2.5A MPCB with 1NO/1NC Front Mounted Aux Contact, 2NO/2NC Trip Indicating Aux Contact, LSTB	$ 434.00
ECP-300-2D40- ## - UD ECP-300-2D40- ## - CD	630-S18D10-2D40-F11-T22-L	Series 630 Direct-On-Line Starter (DOL) 3P 18A Non-Reversing Contactor, 120V 60Hz/ 110V 50Hz Coil, 1NO Aux Contact, 2.5 ~ 4.0A MPCB with 1NO/1NC Front Mounted Aux Contact, 2NO/2NC Trip Indicating Aux Contact, LSTB	$ 434.00
ECP-300-2D63- ## - UD ECP-300-2D63- ## - CD	630-S18D10-2D63-F11-T22-L	Series 630 Direct-On-Line Starter (DOL) 3P 18A Non-Reversing Contactor, 120V 60Hz/ 110V 50Hz Coil, 1NO Aux Contact, 4.0 ~ 6.3A MPCB with 1NO/1NC Front Mounted Aux Contact, 2NO/2NC Trip Indicating Aux Contact, LSTB	$ 443.00
ECP-300-2U10- ## - UD ECP-300-2U10- ## - CD	630-S18D10-2U10-F11-T22-L	Series 630 Direct-On-Line Starter (DOL) 3P 18A Non-Reversing Contactor, 120V 60Hz/ 110V 50Hz Coil, 1NO Aux Contact, 6.3 ~ 10A MPCB with 1NO/1NC Front Mounted Aux Contact, 2NO/2NC Trip Indicating Aux Contact, LSTB	$ 449.00
ECP-300-2U16- ## - UD ECP-300-2U16- ## - CD	630-S18D10-2U16-F11-T22-L	Series 630 Direct-On-Line Starter (DOL) 3P 18A Non-Reversing Contactor, 120V 60Hz/ 110V 50Hz Coil, 1NO Aux Contact, 10 ~ 16A MPCB with 1NO/1NC Front Mounted Aux Contact, 2NO/2NC Trip Indicating Aux Contact, LSTB	$ 465.00
ECP-300-2U20- ## - UD ECP-300-2U20- ## - CD	630-S25D10-2U20-F11-T22-L	Series 630 Direct-On-Line Starter (DOL) 3P 25A Non-Reversing Contactor, 120V 60Hz/ 110V 50Hz Coil, 1NO Aux Contact, 16 ~ 20A MPCB with 1NO/1NC Front Mounted Aux Contact, 2NO/2NC Trip Indicating Aux Contact, LSTB	$ 492.00
ECP-300-2U25- ## - UD ECP-300-2U25- ## - CD	630-S32D10-2U25-F11-T22-L	Series 630 Direct-On-Line Starter (DOL) 3P 32A Non-Reversing Contactor, 120V 60Hz/ 110V 50Hz Coil, 1NO Aux Contact, 20 ~ 25A MPCB with 1NO/1NC Front Mounted Aux Contact, 2NO/2NC Trip Indicating Aux Contact, LSTB	$ 556.00
ECP-300-2U32- ## - UD ECP-300-2U32- ## - CD	630-S32D10-2U32-F11-T22-L	Series 630 Direct-On-Line Starter (DOL) 3P 32A Non-Reversing Contactor, 120V 60Hz/ 110V 50Hz Coil, 1NO Aux Contact, 25 ~ 32A MPCB with 1NO/1NC Front Mounted Aux Contact, 2NO/2NC Trip Indicating Aux Contact, LSTB	$ 556.00

REPLACEMENT PARTS			
FOR USE WITH	**REPLACEMENT ITEM NUMBER**	**DESCRIPTION**	**LIST**
STARTER KIT: MPCB + CONTACTOR WITH AUXILIARY CONTACTS AND TERMINAL BARRIER, 24V AC 50/60HZ COIL VOLTAGE			
ECP-300-2C16- ## - UXC	630-S18XC10-2C16-F11-T22-L	Series 630 Direct-On-Line Starter (DOL) 3P 18A Non-Reversing Contactor, Coil: 24VAC 60Hz/50Hz, 1NO Aux Contact, 0.01 ~ 0.16A MPCB with 1NO/1NC Front Mounted Aux Contact, 2NO/2NC Trip Indicating Aux Contact, LSTB	$ 452.00
ECP-300-2C25- ## - UXC	630-S18XC10-2C25-F11-T22-L	Series 630 Direct-On-Line Starter (DOL) 3P 18A Non-Reversing Contactor, Coil: 24VAC 60Hz/50Hz, 1NO Aux Contact, 0.16 ~ 0.25A MPCB with 1NO/1NC Front Mounted Aux Contact, 2NO/2NC Trip Indicating Aux Contact, LSTB	$ 452.00
ECP-300-2C40- ## - UXC	630-S18XC10-2C40-F11-T22-L	Series 630 Direct-On-Line Starter (DOL) 3P 18A Non-Reversing Contactor, Coil: 24VAC 60Hz/50Hz, 1NO Aux Contact, 0.25 ~ 0.4A MPCB with 1NO/1NC Front Mounted Aux Contact, 2NO/2NC Trip Indicating Aux Contact, LSTB	$ 462.00
ECP-300-2C63- ## - UXC	630-S18XC10-2C63-F11-T22-L	Series 630 Direct-On-Line Starter (DOL) 3P 18A Non-Reversing Contactor, Coil: 24VAC 60Hz/50Hz, 1NO Aux Contact, 0.4 ~ 0.63A MPCB with 1NO/1NC Front Mounted Aux Contact, 2NO/2NC Trip Indicating Aux Contact, LSTB	$ 466.00
ECP-300-2D10- ## - UXC	630-S18XC10-2XC10-F11-T22-L	Series 630 Direct-On-Line Starter (DOL) 3P 18A Non-Reversing Contactor, Coil: 24VAC 60Hz/50Hz, 1NO Aux Contact, 0.63 ~ 1.0A MPCB with 1NO/1NC Front Mounted Aux Contact, 2NO/2NC Trip Indicating Aux Contact, LSTB	$ 469.00
ECP-300-2D16- ## - UXC	630-S18XC10-2D16-F11-T22-L	Series 630 Direct-On-Line Starter (DOL) 3P 18A Non-Reversing Contactor, Coil: 24VAC 60Hz/50Hz, 1NO Aux Contact, 1.0 ~ 1.6A MPCB with 1NO/1NC Front Mounted Aux Contact, 2NO/2NC Trip Indicating Aux Contact, LSTB	$ 469.00
ECP-300-2D25- ## - UXC	630-S18XC10-2D25-F11-T22-L	Series 630 Direct-On-Line Starter (DOL) 3P 18A Non-Reversing Contactor, Coil: 24VAC 60Hz/50Hz, 1NO Aux Contact, 1.6 ~ 2.5A MPCB with 1NO/1NC Front Mounted Aux Contact, 2NO/2NC Trip Indicating Aux Contact, LSTB	$ 469.00
ECP-300-2D40- ## - UXC	630-S18XC10-2D40-F11-T22-L	Series 630 Direct-On-Line Starter (DOL) 3P 18A Non-Reversing Contactor, Coil: 24VAC 60hz/50hz, 1NO Aux Contact, 2.5 ~ 4.0A MPCB with 1NO/1NC Front Mounted Aux Contact, 2NO/2NC Trip Indicating Aux Contact, LSTB	$ 469.00
ECP-300-2D63- ## - UXC	630-S18XC10-2D63-F11-T22-L	Series 630 Direct-On-Line Starter (DOL) 3P 18A Non-Reversing Contactor, Coil: 24VAC 60Hz/50Hz, 1NO Aux Contact, 4.0 ~ 6.3A MPCB with 1NO/1NC Front Mounted Aux Contact, 2NO/2NC Trip Indicating Aux Contact, LSTB	$ 478.00
ECP-300-2U10- ## - UXC	630-S18XC10-2U10-F11-T22-L	Series 630 Direct-On-Line Starter (DOL) 3P 18A Non-Reversing Contactor, Coil: 24VAC 60Hz/50Hz, 1NO Aux Contact, 6.3 ~ 10A MPCB with 1NO/1NC Front Mounted Aux Contact, 2NO/2NC Trip Indicating Aux Contact, LSTB	$ 484.00
ECP-300-2U16-## - UXC	630-S18XC10-2U16-F11-T22-L	Series 630 Direct-On-Line Starter (DOL) 3P 18A Non-Reversing Contactor, Coil: 24VAC 60Hz/50Hz, 1NO Aux Contact, 10 ~ 16A MPCB with 1NO/1NC Front Mounted Aux Contact, 2NO/2NC Trip Indicating Aux Contact, LSTB	$ 500.00
ECP-300-2U20-## - UXC	630-S25XC10-2U20-F11-T22-L	Series 630 Direct-On-Line Starter (DOL) 3P 25A Non-Reversing Contactor, Coil: 24VAC 60Hz/50Hz, 1NO Aux Contact, 16 ~ 20A MPCB with 1NO/1NC Front Mounted Aux Contact, 2NO/2NC Trip Indicating Aux Contact, LSTB	$ 527.00
ECP-300-2U25-## - UXC	630-S32XC10-2U25-F11-T22-L	Series 630 Direct-On-Line Starter (DOL) 3P 32A Non-Reversing Contactor, Coil: 24VAC 60Hz/50Hz, 1NO Aux Contact, 20 ~ 25A MPCB with 1NO/1NC Front Mounted Aux Contact, 2NO/2NC Trip Indicating Aux Contact, LSTB	$ 556.00
ECP-300-2U32-## - UXC	630-S32XC10-2U32-F11-T22-L	Series 630 Direct-On-Line Starter (DOL) 3P 32A Non-Reversing Contactor, Coil: 24VAC 60Hz/50Hz, 1NO Aux Contact, 25 ~ 32A MPCB with 1NO/1NC Front Mounted Aux Contact, 2NO/2NC Trip Indicating Aux Contact, LSTB	$ 556.00

ELECTRICAL SPECIFICATIONS

		2C16	2C25	2C40	2C63	2D10	2D16	2D25	2D40	2D63	2U10	2U16	2U20	2U25	2U32
ELECTRICAL GENERAL		For detailed contactor specifications by starter rating code, see Section 4 Page 13													
		For detailed motor protection circuit breaker specifications by catalog number, see Section 9 Page 13													
	UNITS														
Rated Operating Current	A	0.16	0.25	0.40	0.63	1.0	1.6	2.5	4.0	6.3	10	16	20	25	32
Current Setting Range	A	0.10 ~ 0.16	0.16 ~ 0.25	0.25 ~ 0.40	0.40 ~ 0.63	0.63 ~ 1.0	1.0 ~ 1.6	1.6 ~ 2.5	2.5 ~ 4.0	4.0 ~ 6.3	6.3 ~ 10	10 ~ 16	16 ~ 20	20 ~ 25	25 ~ 32
Magnetic Trip Current	A	2.1	3.3	5.2	8.2	13	21	33	52	82	130	208	260	325	416
Operating Frequency	Hz	50/60													
Transformer Size	VA	50													
ELECTRICAL UL APPLICATIONS		For detailed contactor specifications by starter rating code, see Section 4 Page 13													
		For detailed motor protection circuit breaker specifications by catalog number, see Section 9 Page 13													
MAIN CIRCUITS															
Rated Operating Voltage, Ue	VAC	600													
Short Circuit Current Rating @ 480V AC	kA	10													
Short Circuit Current Rating @ 600V AC	kA	10													
Maximum Fuse or Circuit Breaker Size	A	450													
RATED 1 PHASE OPERATING POWER, Pe															
115V	HP	—	—	—	—	—	—	—	1/8	1/4	1/2	1	1-1/2	2	—
230V	HP	—	—	—	—	—	1/10	1/6	1/3	3/4	1-1/2	3	3	3	5
RATED 3 PHASE OPERATING POWER, Pe															
200V	HP	—	—	—	—	—	1/4	1/2	3/4	1-1/2	3	5	5	7-1/2	10
230V	HP	—	—	—	—	—	1/3	1/2	1	1-1/2	3	5	7-1/2	7-1/2	10
460V	HP	—	—	—	—	1/2	3/4	1-1/2	2	3	7-1/2	10	15	15	20
575V	HP	—	—	—	1/4	1/2	1	1-1/2	3	5	10	15	20	20	25
COIL CHARACTERISTICS		For detailed contactor specifications by starter rating code, see Section 4 Page 14													
Rated Insulation Voltage, Ui	V	1,000													
Operating Limits		80 ~ 110% of Rated Coil Voltage													
MECHANICAL		For detailed contactor specifications by starter rating code, see Section 4 Page 15													
		For detailed motor protection circuit breaker specifications by catalog number, see Section 9 Page 14													
ENVIRONMENTAL															
Ambient Operating Temperature	°C / °F	-20 to 55 / -4 to 131													
Ambient Storage Temperature	°C / °F	-50 to 80 / -58 to 176													
Altitudem / ft.		2,000 / 6,562													
Shock	g	15													
Enclosure: Polycarbonate (Blank)		Type 1, 4/4X and IP66													
Enclosure: Carbon Steel (M1)		Type 1													
Enclosure: Carbon Steel (M4)		Type 3R, 4, & 12													

CONSTRUCTION SPECIFICATIONS															
		2C16	2C25	2C40	2C63	2D10	2D16	2D25	2D40	2D63	2U10	2U16	2U20	2U25	2U32
CONSTRUCTION		For detailed contactor specifications by starter rating code, see Section 4 Page 15													
		For detailed motor protection circuit breaker specifications by catalog number, see Section 9 Page 15													
	UNITS														
Number of Poles	ul	3													
Trip Class	ul	10													
Over Voltage Category	ul	III													
Pollution Degree	ul	3													
INGRESS PROTECTION															
Main Circuit Terminals		IP20													
Control Circuit Terminals		IP20													
MPCB CONDUCTOR SIZE															
UL/CSA	AWG	2 x 14 ~ 10													
Solid	mm^2	2 x 1 ~ 2.5													
Stranded	mm^2	2 x 1 ~ 2.5													
Fine Stranded	mm^2	2 x 1 ~ 2.5													
MPCB TERMINAL TORQUE	Nm	2 ~ 2.5													
	Lb-in.	17.7 ~ 22.1													

NOTE: For circuit diagrams, wiring schematics and to download installation instructions visit c3controls.com.

ENCLOSED STARTER ASSEMBLIES WITH POLYCARBONATE ENCLOSURE

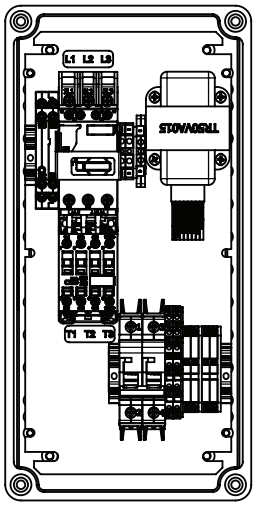

Cover Off

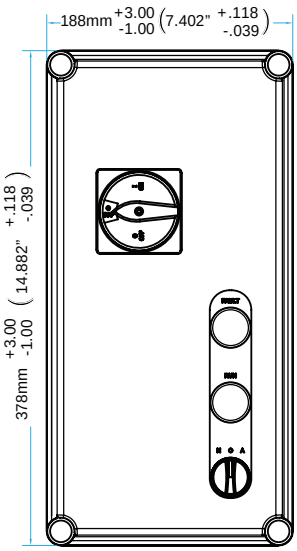

Front View

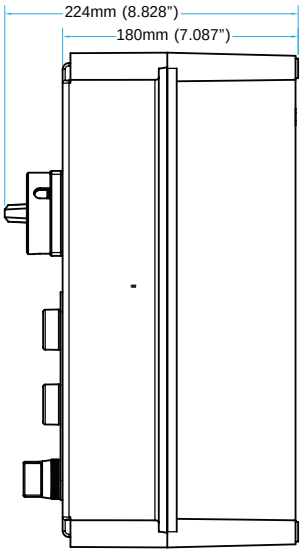

Side View

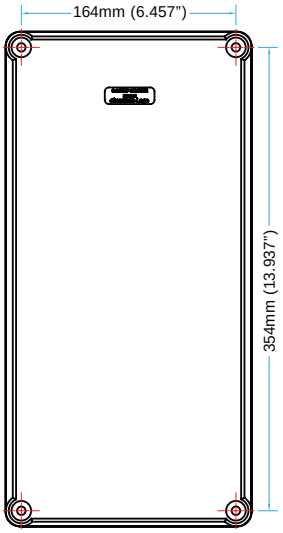

Back View

ENCLOSED STARTER ASSEMBLIES WITH CARBON STEEL ENCLOSURE

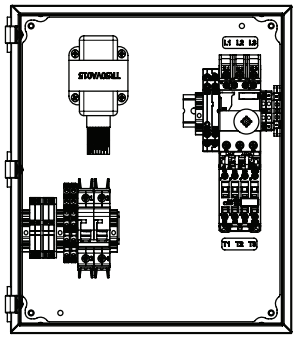

Cover Off

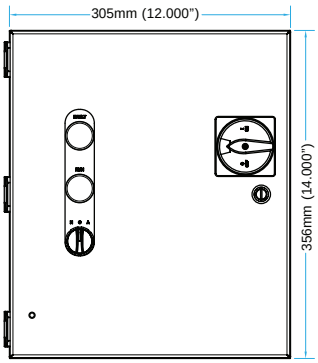

Front View

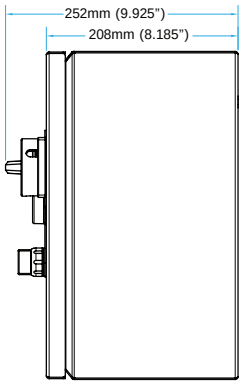

Side View

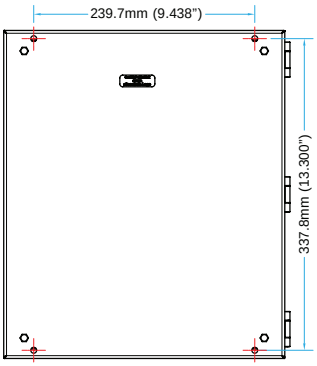

Back View

VISIT C3CONTROLS.COM TO DOWNLOAD CAD DRAWINGS

CONTROL CIRCUIT TRANSFORMERS

series CCT

c3controls' line of Control Circuit Transformers are well-designed and optimized devices to cater not only to residential and commercial HVAC/Building Management Systems (BMS) but also a wide range of industrial applications. Due to the innovative design approach, you would find these products at never-seen-before prices. Check out all the features this line has to offer.

Section 34

Control Circuit Transformers	4
Specifications	6
Wiring Diagrams	7
Dimensions	9

PROVEN

Conformity to Standards:

UL 5085-3, UL 5085-2
CSA C22.2 No.66.3, CSA C22.2 No.66.2
IEC 61558

Certifications:

UL File#: E533585, (Guide XOKV, XOKV7), E541700 (Guide XPTQ, XPTQ7)
CE Marked (per EU Low Voltage Directive 2014/35/EC and RoHS Directive 2015/863/EU)

NOTE: The scope (range, description, price, specifications, dimensions, etc.) of the product featured in this section is subject to change without notice. Refer to c3controls.com for product updates.

CONTROL CIRCUIT TRANSFORMERS

Discover c3controls' exceptional line of Control Circuit Transformers, meticulously engineered to meet the needs of residential and commercial HVAC/Building Management Systems (BMS), as well as a wide array of industrial applications. Our innovative design approach not only ensures top-tier performance but also introduces these products at unprecedented, budget-friendly prices. Dive into the rich tapestry of features that this product line unfolds, and experience excellence like never before.

DELIVERING SUPERIOR PRODUCT QUALITY AND MANUFACTURING EXCELLENCE

✓ **Proven**	Our Series CCT Control Circuit Transformers are UL Listed and CE marked to meet global standards requirements and are compliant to the RoHS directives.
✓ **Enviromentally Secure**	Designed and tested for ensuring operation in extreme temperatures, to keep your application running.
✓ **Easy to Install**	Panel-mountable with four screws, one in each corner, for fast and simple installation as well as reliability in vibrating environments.
✓ **Added Safety**	The transformer windings are enclosed, providing much needed safety for a critical application.
✓ **Visible Certifications**	Our product certifications and electrical ratings are clearly marked on the outside of the device for easy reference during installation.
✓ **36-Month Warranty***	Every product is backed by our 36-Month Warranty—giving you confidence in the quality, reliability, and performance of components designed for the most demanding applications.
✓ **Guaranteed Same-Day Shipping***	Product availability reduces inventory and improves cash-flow—saving you money. With c3controls any order for standard catalog items received by 6:00pm ET is guaranteed to ship same day.
✓ **Advantage Pricing**	Our approach to product development, manufacturing, and focus on servicing the OEM and Electrical Equipment Builder reduces cost. The result—the best value in the industry.

*See c3controls Terms & Conditions

CCT1-75-DSCS-C

CCT1-75-RMCS-C

CCT1-100-DSCS-C

CCT1-100-RMCS-C

UNIQUE PRODUCT LINE FEATURES

OVERCURRENT PROTECTION

All our Class 2 devices come with an overcurrent protection option, either inherent or non-inherent, eliminating the need for additional protection in a panel.

CLASS 2 DESIGN

Transformers up to 100VA are Class 2 certified making them the safest device in your control application.

CONNECT TO ANYTHING

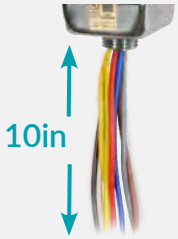

Primary and secondary wires are 10-inches long, making them easy to connect to a nearby load.

COLOR-CODED WIRES

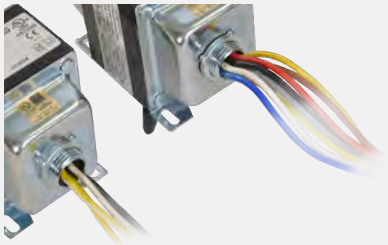

Secondary as well as different taps on primary are uniquely color-coded to facilitate error-proof installation.

VERSATILE

Options are available to offer multiple voltages: 120V to 480V on primary side in a single device, making it usable in a variety of applications and saving on your inventory.

FIND IT FAST

Control Circuit Transformers

- Certifications
- Specifications
- Dimension Drawings
- Installation Instructions
- Easy to Buy

c3controls.com

IT'S EASY TO BUILD YOUR OWN CONTROL CIRCUIT TRANSFORMER

Simply pick the code number from each of the sections below and combine them to build your part number.

Control Circuit Transformers

CCT1 – ____ – ____ ____ C S – ____
I II III IV V VI VII

Example: To build one of our most popular Control Circuit Transformers, the part number would be **CCT1 + II + III + IV + C + S + VII** or **CCT1-100-DSCS-C**

I. PRODUCT TYPE

CODE	DESCRIPTION
CCT1	Control Circuit Transformer

II. VOLT - AMPERES

CODE	DESCRIPTION	LIST
20	20	$ 12.40
40	40	$ 20.50
50	50	$ 32.00
75	75	$ 45.00
100	100	$ 56.40
150	150	$ 82.00
240	240	$162.00
300	300	$188.00

III. VOLTAGE (PRIMARY)

CODE	DESCRIPTION	FOR VOLT-AMP CODES	LIST
D	120V	20, 40, 50, 75, 100, 150, 240, 300	$ 8.00
P	277/240/208/120 (P-277V)	20, 40	$16.90
R	480/277/240/208/120 (R-480V)	50, 75, 100, 150, 240, 300	$22.00

IV. TAPS (PRIMARY)

CODE	DESCRIPTION	FOR VOLTAGE (PRIMARY) CODES
S	Single	D
M	Multiple	P, R

V. VOLTAGE (SECONDARY)

CODE	DESCRIPTION
C	24

VI. TAPS (SECONDARY)

CODE	DESCRIPTION
S	Single

VII. PROTECTION TYPE

CODE	DESCRIPTION	FOR VOLT-AMP CODES	LIST
N	None	150, 240, 300	—
I	Inherently Protected	20, 40	$10.00
F	Fuse	50	$11.00
C	Circuit Breaker	50, 75, 100,150, 240, 300	$15.00

DISCOUNT SCHEDULE E

Some of Our Popular Configurations:

CONTROL CIRCUIT TRANSFORMERS

CATALOG NUMBER	DESCRIPTION	LIST
CCT1-100-RMCS-C	100VA, Primary 480/277/240/208/120V, Secondary 24V, Circuit Breaker Protection, UL 5085-3 (Class 2)	$93.40
CCT1-100-DSCS-C	100VA, Primary 120V, Secondary 24V, Circuit Breaker Protection, UL 5085-3 (Class 2)	$79.40
CCT1-50-RMCS-C	50VA, Primary 480/277/240/208/120V, Secondary 24V, Circuit Breaker Protection, UL 5085-3 (Class 2)	$69.00
CCT1-40-DSCS-I	40VA, Primary 120V, Secondary 24V, Inherently Protected, UL 5085-3 (Class 2)	$38.50

Control Circuit Transformers

c3controls offers a comprehensive range of Control Circuit Transformers (CCT) designed with precise attention to detail, to cater to a wide array of applications. Whether it's residential and commercial HVAC systems, Building Management Systems (BMS), or the intricate demands of complex industrial environments, we offer a variety of options spanning from 20 to 300VA, featuring a 10-inch-long wire for seamless connectivity, having them color-coded for easy identification. These devices offer flexible primary voltage options ranging from 120 to 480V, with 24V secondary. Additionally, devices up to 100VA are Class 2, equipped with built-in overcurrent protection

Product features include:

- Engineered for high efficiency, minimizing energy loss during conversion & isolation.
- Built with high-quality materials to withstand harsh environmental conditions & rigorously tested to meet the highest UL safety standards, ensuring industry-leading safety for your peace of mind.
- Equipped with an integrated grounding system for an additional layer of safety.
- Select models feature manual resettable circuit breakers, offering both protection and reliability. This feature enhances reusability, a capability not found in transformers with fuse or no protection.
- Designed with a space-saving footprint, allowing for installation in constrained environments.
- Designed with lead wires emanating from a single hub, allowing for easy connection to conduit for a secure and stable setup.
- Versatile for Class 2, Class 3, and general-purpose applications, with the added ability to accommodate a wide range of North American European voltages/frequencies. This universality makes them an adaptable energy source for various settings.
- Transformers are foot-mount, using M4 screws and are equipped with a 0.5" NPT hub which is compatible with both steel and PVC conduits.

Specifications:

CONTROL CIRCUIT TRANSFORMER SPECIFICATIONS		
ELECTRICAL/ GENERAL		
	UNITS	
Rating	VA	20, 40, 50, 75, 100, 150, 240, 300
RATED VOLTAGE		
Primary	V	480/277/240/208/120
Secondary	V	24
OVERCURRENT PROTECTION		Inherently Protected, Fuse, Circuit Breaker, None (For Models Above 100VA)
MTBF	Hours	100,000
POWER FREQUENCY WITHSTAND VOLTAGE		
Primary		2.5kV RMS for 1 minute
Secondary	V	2.5kV RMS for 1 minute
ENVIRONMENTAL		
Operating Temperature	°C / °F	-34 to +60 / -30 to +140
WIRING		
Wire Size	AWG	16
Wire Length	Inch	10 (with 0.5-inches stripped)
COMPLIANCE		
Up to 100VA		UL 5085-3 (Class 2)
150VA and above		UL 5085-2
ROHS COMPLIANCE		For RoHS compliance documentation by product, refer to c3controls.com

CCT1-XX-DSCS-X

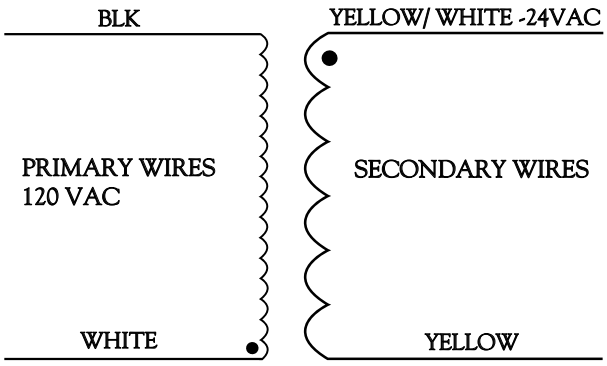

SECONDARY YEL/'WHT WIRE IN PHASE WITH PRIMARY BLACK WIRE

CCT1-XX-PMCS-X

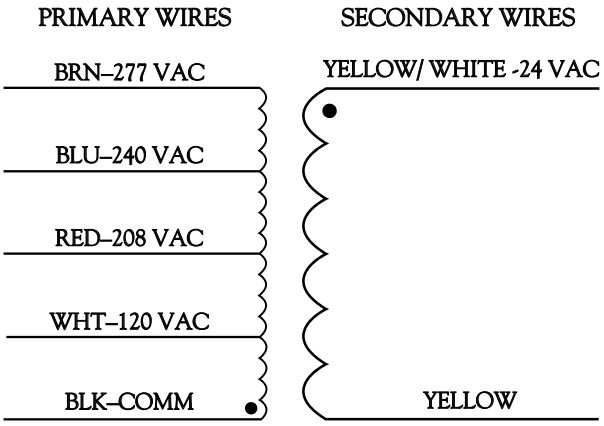

SECONDARY YEL/'WHT WIRE IN PHASE WITH PRIMARY BLACK WIRE

CCT1-XX-RMCS-X

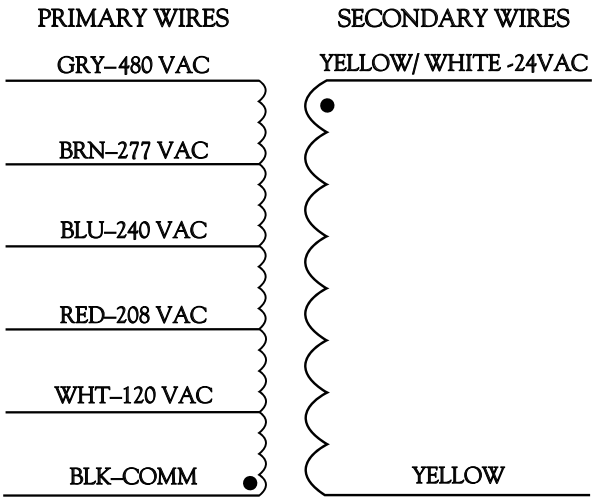

SECONDARY YEL/'WHT WIRE IN PHASE WITH PRIMARY BLACK WIRE

CCT1-20-DSCS-I

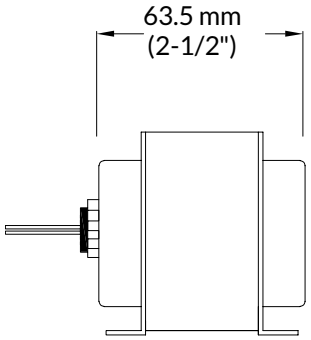

Front View

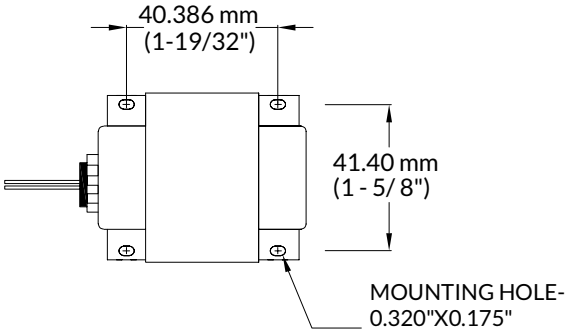

Top View

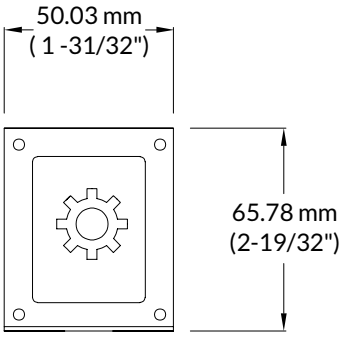

Side View

CCT1-20-PMCS-I

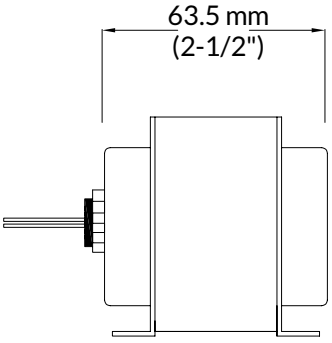

Front View

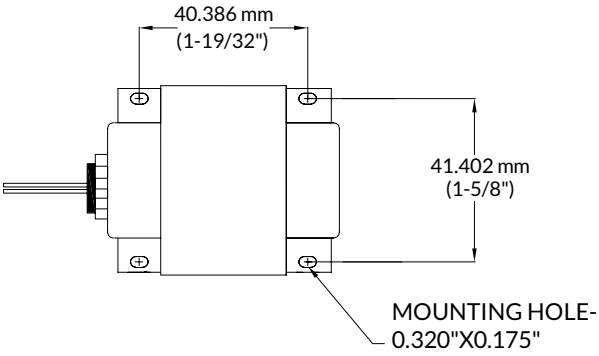

Top View

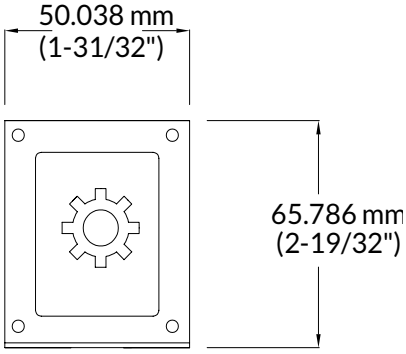

Side View

CCT1-40-DSCS-I / CCT1-40-PMCS-I

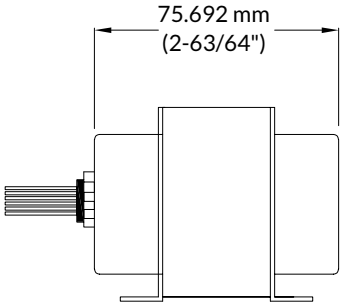

Front View

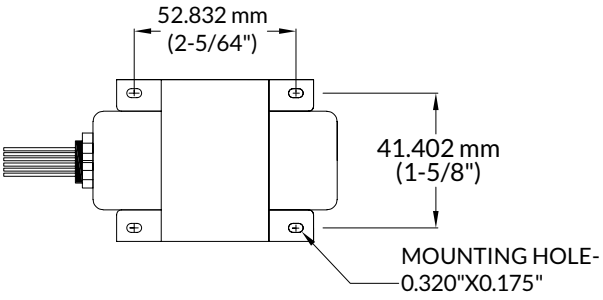

Top View

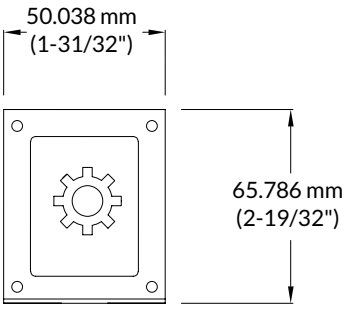

Side View

CCT1-50-DSCS-C

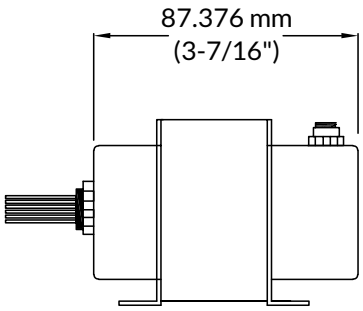

Front View

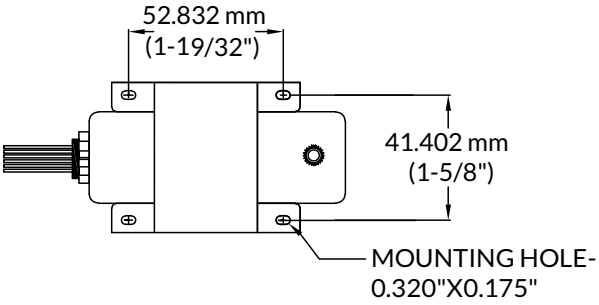

Top View

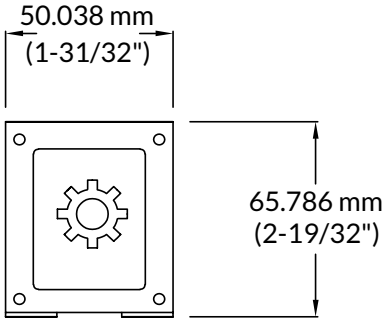

Side View

CCT1-50-DSCS-F

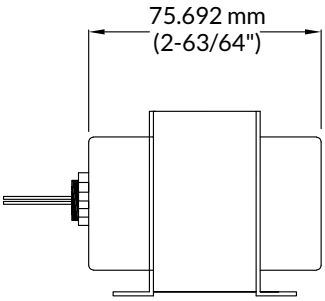

Front View

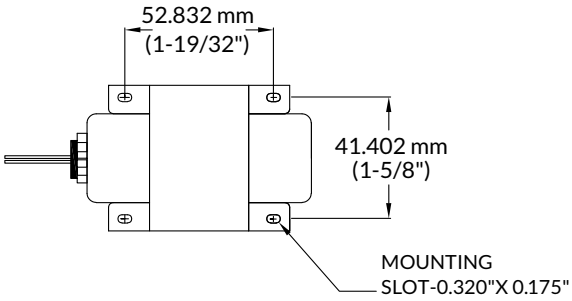

Top View

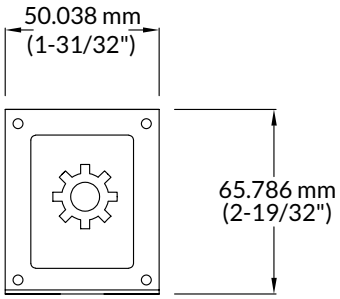

Side View

CCT1-50-RMCS-C

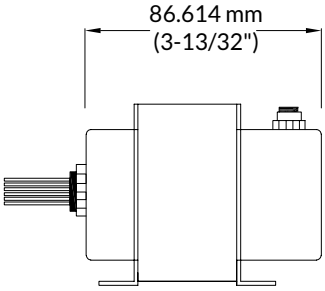

Front View

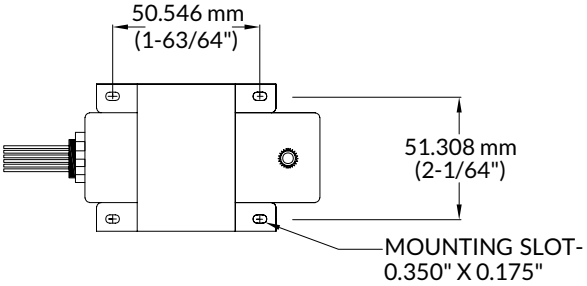

Top View

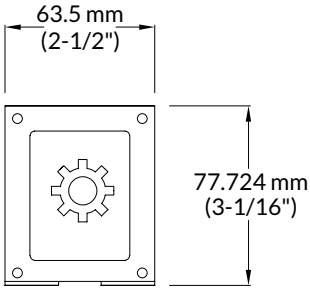

Side View

CCT1-50-RMCS-F

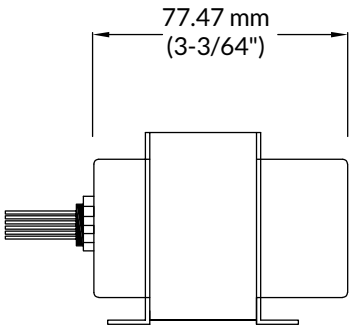

Front View

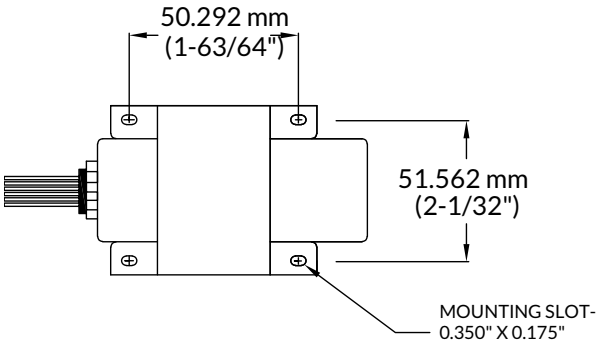

Top View

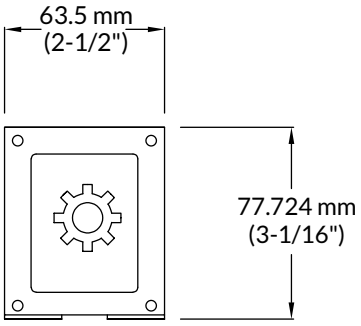

Side View

CCT1-75-DSCS-C

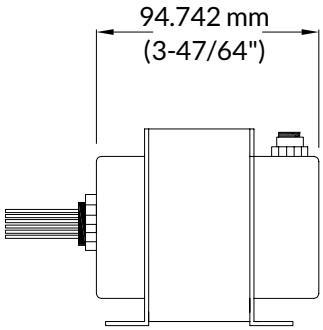

Front View

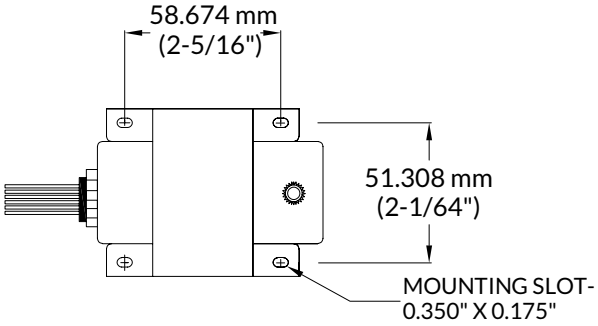

Top View

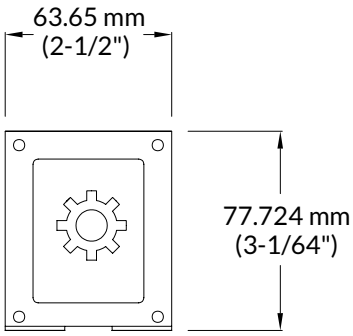

Side View

CCT1-75-RMCS-C

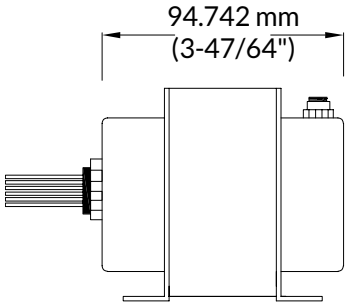

Front View

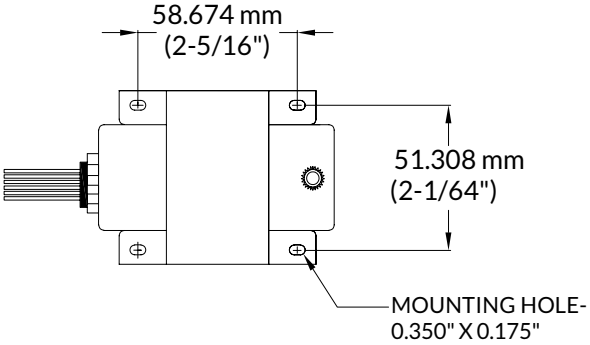

Top View

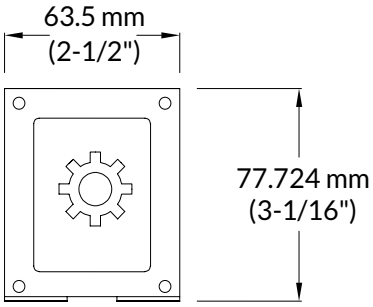

Side View

CCT1-100-DSCS-C

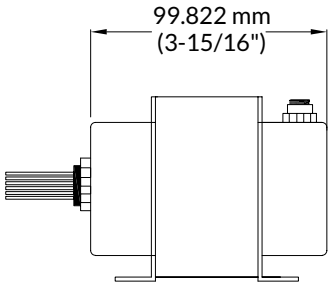

Front View

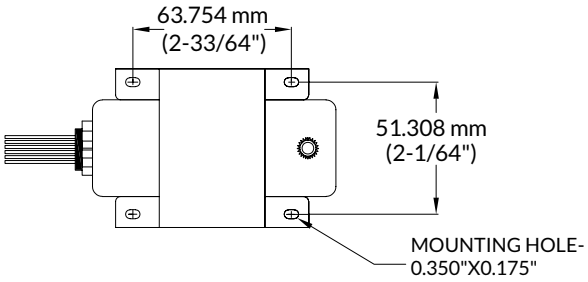

Top View

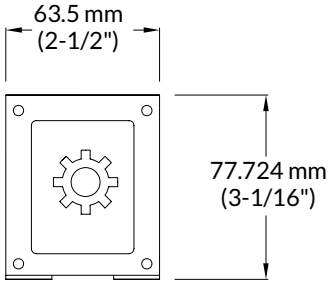

Side View

CCT1-100-RMCS-C

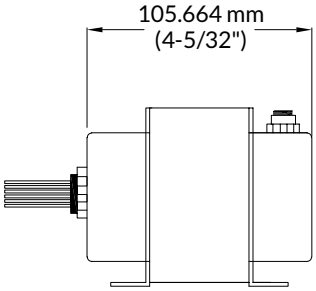

Front View

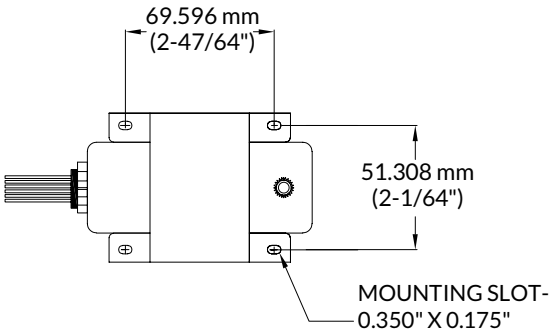

Top View

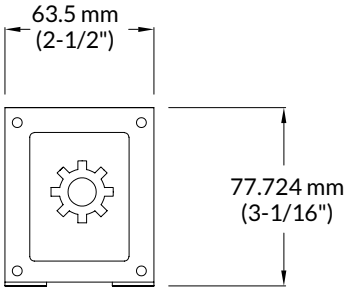

Side View

CCT1-150-DSCS-C / CCT1-150-RMCS-C

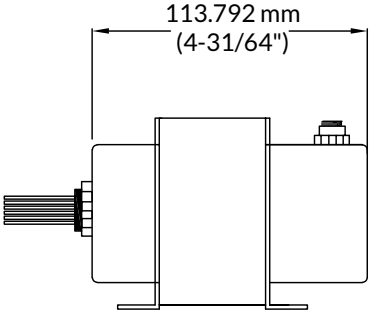

Front View

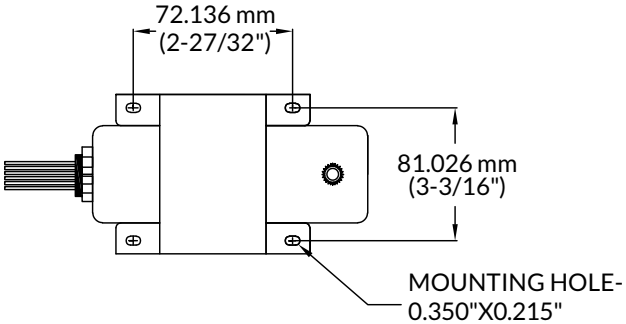

Top View

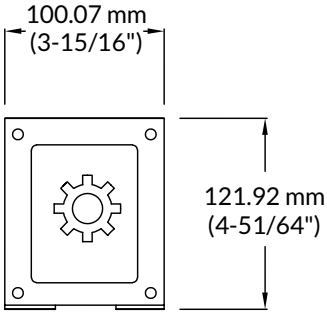

Side View

CCT1-150-DSCS-N / CCT1-150-RMCS-N

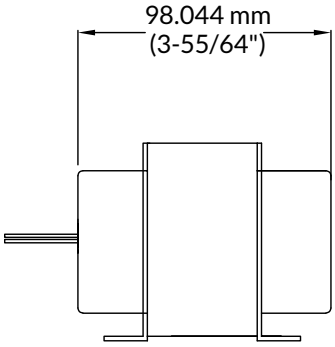

Front View

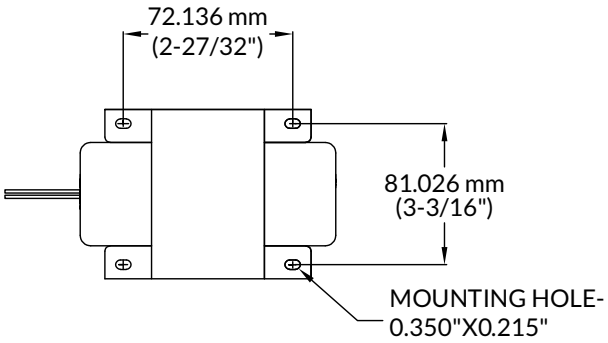

Top View

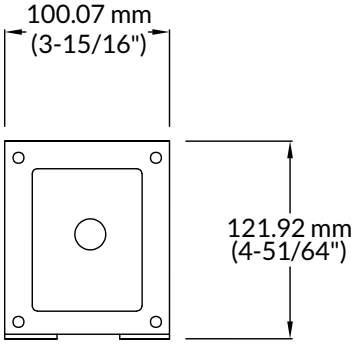

Side View

CCT1-240-DSCS-C

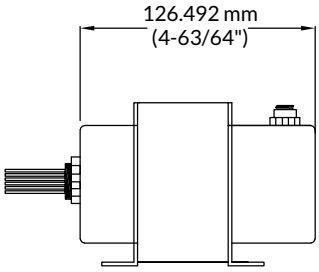

Front View

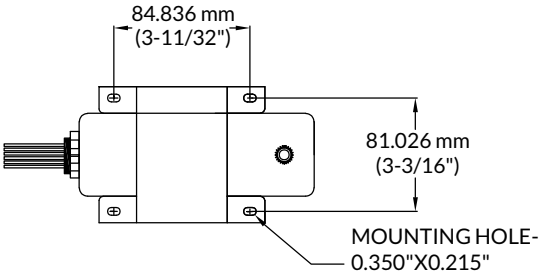

Top View

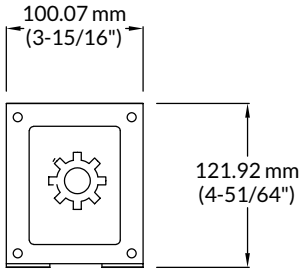

Side View

CCT1-240-DSCS-N / CCT1-300-DSCS-N

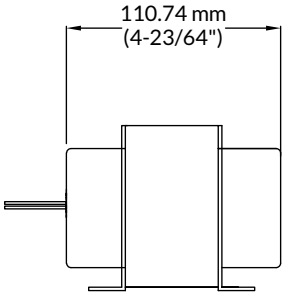

Front View

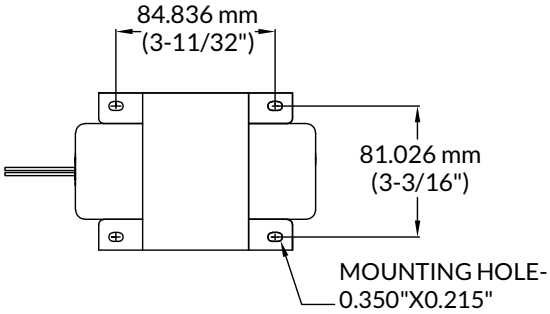

Top View

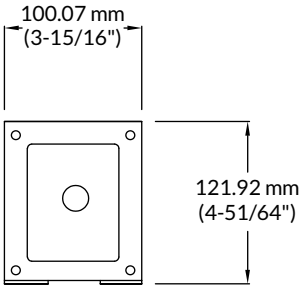

Side View

CCT1-240-RMCS-N

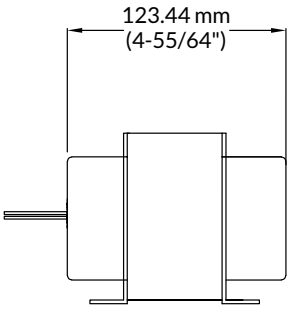

Front View

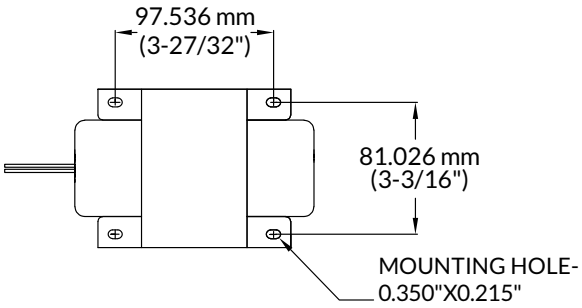

Top View

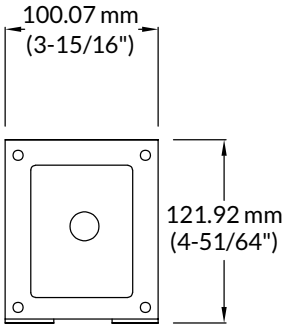

Side View

CCT1-240-RMCS-C / CCT1-300-RMCS-C

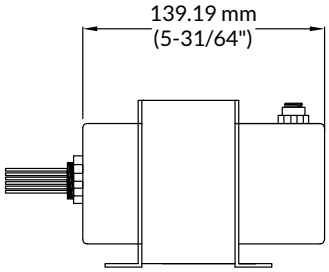

Front View

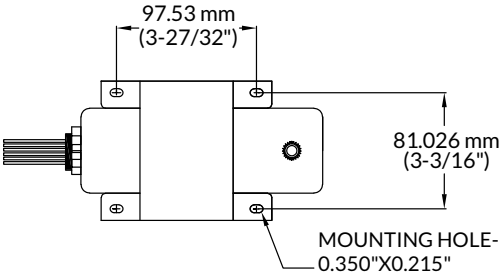

Top View

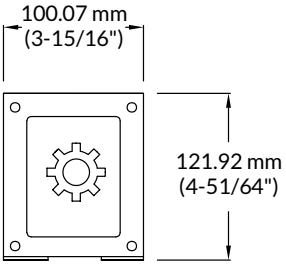

Side View

CCT1-300-DSCS-C

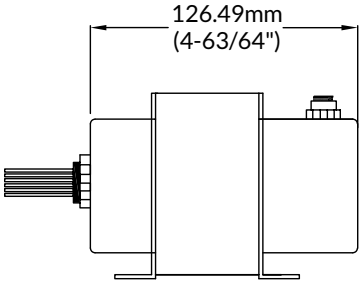

Front View

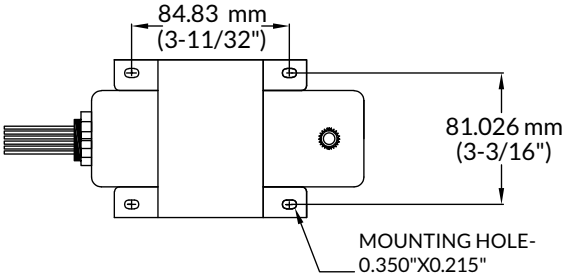

Top View

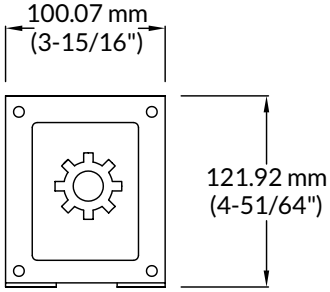

Side View

CCT1-300-RMCS-N

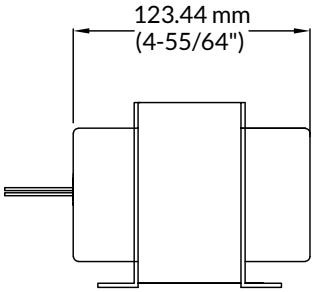

Front View

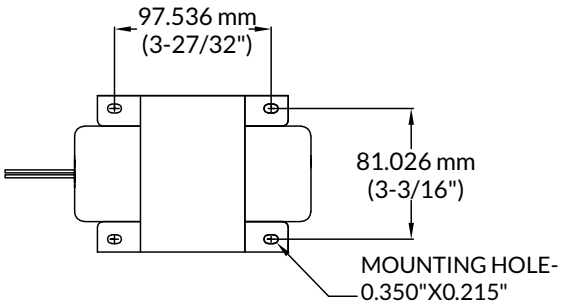

Top View

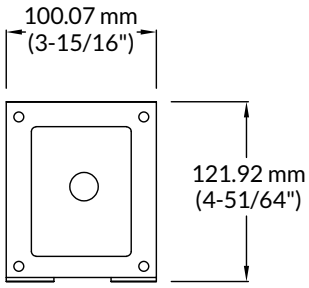

Side View

VISIT C3CONTROLS.COM TO DOWNLOAD CAD DRAWINGS

CONTROL POWER TRANSFORMERS

series CPT

c3controls' Series CPT Control Power Transformers are open-type control transformers ranging from 50 to 5000VA with reliable output voltage stability and designed for lower inrush applications (Lighting, Motor Control, Circuit Isolation, etc). These transformers are commonly preferred solutions to power control circuits including: PLCs, protective relays, meters, control panels, and other auxiliary devices. Additionally, they are widely used in electrical substations, data centers, and other power systems.

Section 37

Control Power Transformers	4
Accessories	5
Selection Guide	6
Specifications	7
Wiring Schematics	8
Dimensions	10

PROVEN

Conformity to Standards:

UL 5085-2
CSA C22.2 No. 66.2
IEC 61558

Certifications:

UL File #: E541700

CE Marked (per EU Low Voltage Directive 2014/35/EC and RoHS Directive 2015/863/EU)

CONTROL POWER TRANSFORMERS

At c3controls, we offer a comprehensive line of Control Power Transformers, part of our extensive portfolio designed to meet the specific needs of machine and panel builders. Our products are engineered for reliability and performance, ensuring durability in demanding applications while remaining cost-effective. With a focus on providing robust solutions, our transformers are built to last and are available at competitive price points. Explore the full range of features and benefits of our Series CPT to see how our transformers can elevate your project with both quality and value.

DELIVERING SUPERIOR PRODUCT QUALITY AND MANUFACTURING EXCELLENCE	
✓ **Proven**	Our Control Power Transformers are certified to UL Standards and CE marked for global versatility.
✓ **Easy to Install**	Panel-mountable with four screws, one in each corner, for fast and simple installation as well as reliability in vibrating environments.
✓ **Simple Wiring**	Integrated molded terminal blocks, equipped with IP20 protection, facilitate simplified wiring and safeguard against accidental contact with the power source.
✓ **36-Month Warranty***	Every product is backed by our 36-Month Warranty—giving you confidence in the quality, reliability, and performance of components designed for the most demanding applications.
✓ **Guaranteed Same-Day Shipping***	Product availability reduces inventory and improves cash-flow—saving you money. With c3controls any order for standard catalog items received by 6:00pm ET is guaranteed to ship the same day.
✓ **Advantage Pricing**	Our approach to product development, manufacturing, and focus on servicing the OEM and Electrical Equipment Builder reduces cost. The result—the best value in the industry.

*See c3controls Terms & Conditions

CPT1-0050-RD-FD

CPT1-0250-RD-FD

UNIQUE PRODUCT LINE FEATURES

WIDE RANGE OF VA RATINGS

Available in multiple VA ratings from 50VA to 5000VA.

EASE OF WIRING

Integrated terminal blocks and a finger-safe terminal guard, with IP20 protection on primary as well as secondary sides.

CLEAR TERMINAL IDENTIFICATION

Improved terminal identification through clear labeling helps save time.

CLASS H

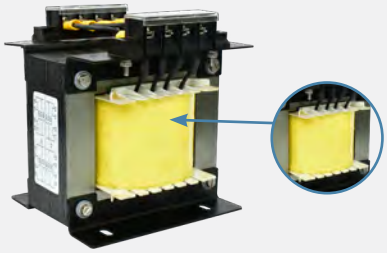

Each transformer variant features a Class H insulation system, ensuring the highest level of safety for your control application.

DUAL FREQUENCY RATING

With a versatile dual frequency rating of 50/60Hz, these products are well-suited for global applications.

FUSE MOUNTING ACCESSORY

An optional fuse block adapter kit can be added to a variant up to 3000VA (or a variant having current up to 30A) for overcurrent protection, applicable for both primary and secondary sides of the transformer.

FIND IT FAST

Control Power Transformers

- Certifications
- Specifications
- Dimension Drawings
- Installation Instructions
- Easy to Buy

c3controls.com

IT'S EASY TO BUILD YOUR OWN CONTROL POWER TRANSFORMER

Simply pick the code number from each of the sections below and combine them to build your part number.

Control Power Transformer

CPT1 - _____ - _____
I *II* *III*

Example: To build one of our most popular Control Power Transformers, the part number would be CPT1 + II + III or CPT1-0050-RD-FD

I. PRODUCT TYPE

CODE	DESCRIPTION
CPT1	Control Power Transformer

II. ELECTRIC POWER

CODE	DESCRIPTION	FOR USE WITH PRIMARY-SECONDARY CODES	LIST
	FOR SINGLE SECONDARY OUTPUT		
0050	50 VA	RD-FD, TS-DS, RD-CS, PM-DS, RM-FD	$ 86.40
0075	75 VA		$ 95.10
0100	100 VA		$ 103.70
0150	150 VA		$ 122.90
0250	250 VA		$ 165.20
0350	350 VA		$ 222.70
0500	500 VA		$ 266.90
0750	750 VA		$ 361.10
1000	1000 VA		$ 409.10
1500	1500 VA		$ 531.90
2000	2000 VA		$ 760.50
3000	3000 VA		$1244.50
5000	5000VA*		$2036.55
	FOR DUAL SECONDARY OUTPUT		
0050	50 VA	TM-DD	$ 121.00
0075	75 VA		$ 133.10
0100	100 VA		$ 145.20
0150	150 VA		$ 172.10
0250	250 VA		$ 231.20
0350	350 VA		$ 311.90
0500	500 VA		$ 373.70
0750	750 VA		$ 505.50
1000	1000 VA		$ 572.70

III. PRIMARY-SECONDARY

CODE	PRIMARY	SECONDARY
	SINGLE SECONDARY OUTPUT	
RD-FD	220/230/240V, 440/460/480V	110/115/120V, 220/230/240V
TS-DS	550/575/600V*	110/115/120V*
RD-CS	240V, 480V*	24V*
PM-DS	208V, 277V*	120V*
RM-FD	380V, 400V, 415V*	110V, 220V*
	DUAL SECONDARY OUTPUT	
TM-DD	200/208V, 220/230/240V, 440/460/480V*	24/25/26V, 110/115/120V*

DISCOUNT SCHEDULE E

*NOTE: Products marked with * are not available for same-day shipping. Contact our Customer First Team for lead times and minimum order quantities.

Some of Our Popular Configurations:

CONTROL POWER TRANSFORMERS

CODE	DESCRIPTION	LIST
CPT1-0050-RD-FD	Control Power Transformer, 50VA, Pri: 220/230/240V, 440/460/480V, Sec: 110/115/120V, 220/230/240V, UL 5085-2, CE Marked	$ 86.40
CPT1-0100-RD-FD	Control Power Transformer, 100VA, Pri: 220/230/240V, 440/460/480V, Sec: 110/115/120V, 220/230/240V, UL 5085-2, CE Marked	$103.70
CPT1-0050-TM-DD	Control Power Transformer, 50VA, Pri: 200/208V, 220/230/240V, 440/460/480V, Sec: 24/25/26V, 110/115/120V, UL 5085-2, CE Marked	$121.00
CPT1-0150-TM-DD	Control Power Transformer, 150VA, Pri: 200/208V, 200/230/240V, 440/460/480V, Sec: 24/25/26V, 110/115/120V, UL 5085-2, CE Marked	$172.10

Control Power Transformers

c3controls offers a comprehensive range of Control Power Transformers (CPT) designed with precise attention to detail, catering to a wide array of applications. Whether it's Control Panels, Motor Control Centers, HVAC Systems, or the complex demands of industrial environments, these transformers offer versatile solutions with a wide range of options from 50 to 5000 VA with six distinct voltage variants. Our CPTs feature integrated terminal blocks for convenient and flexible connections.

Product features include:

- Transformer windings are subjected to a vacuum pressure impregnation (VPI) using insulating varnish to enhance dielectric strength and thermal performance.
- High-quality silicon steel laminations are used to reduce core losses and enhance performance.
- The integrated terminal block, equipped with a finger guard, enhances safety and reliability.
- Designed to optimize efficiency, reducing energy waste during conversion and isolation.
- Designed with high-quality materials to resist adverse environmental factors and rigorously evaluated to adhere to stringent UL safety standards, providing industry-leading safety for your peace of mind.
- The unrestricted airflow facilitated by the open design enables rapid cooling.
- Capable of handling dynamic loads effectively, suitable for industrial applications with fluctuating power demands.
- Ability to provide multiple voltage outputs from a single unit.

ACCESSORIES

Fuse Block Adapter Plates

The Fuse Block Adapter Plate facilitates the seamless installation of fuse blocks on transformers, ensuring a secure and efficient setup. Engineered for universal compatibility, it supports transformers across a wide range (50 – 3000 VA), providing enhanced flexibility for diverse applications.

Note: The Fuse Block Adapter Plate provides only the mechanical means of attaching a third-party aftermarket fuse block; electrical compatibility and wiring must be ensured separately.

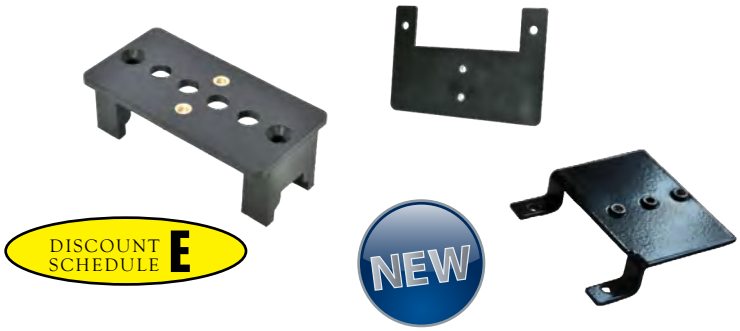

CODE	FOR USE WITH	LIST
CPT1-FBAP1	50 VA to 150 VA transformer – can accommodate both 2-pole and 3-pole fuse holders.	$10.60
CPT1-FBAP2	350VA transformer - can accommodate both 2-pole and 3-pole fuse holders.	$10.60
CPT1-FBAP3	250 VA & 500 - 3000 VA transformer – can accommodate both 2-pole and 3-pole fuse holders.	$10.60

TRANSFORMERS SELECTION GUIDE

Selection of Proper VA rating of Transformer:

In order to choose the appropriate transformer, you must first identify three characteristics of the load circuit: the total steady-state (sealed) VA, the total inrush VA, and the inrush load power factor.

1. The total steady-state (sealed) VA refers to the volt-amperes that the transformer needs to supply to the load circuit continuously. This represents the amount of current required to maintain the contact within the circuit. (Calculate by adding the total steady-state VA of all devices in your control circuit.)

2. Total inrush VA represents the volt-amperes that the transformer is required to supply when the control circuit is initially powered on. This value is determined by summing the inrush VA of all components that are energized at startup. Additionally, it is important to include the VA of components which do not have inrush VA, such as indicating lights, lamps, timers, etc, since they also impose a load on the transformer during peak inrush.

3. The total inrush VA can be computed using the following formula:

$$\text{Total Inrush VA} = \sqrt{(\text{VA sealed})^2 + (\text{VA inrush})^2}$$

4. To determine the appropriate VA rating, consult the Regulation Data Table. If the nominal supply voltage exhibits a fluctuation of no more than 5%, reference the 90% secondary voltage column. For supply voltage variations up to 10%, utilize the 95% secondary voltage column. The 85% secondary voltage column provides minimum values necessary for correct electromagnetic device operation and should be employed solely as a reference.

5. Using the provided regulation data table, select a transformer with a continuous VA rating that meets or exceeds the value calculated in Step 1, and with a maximum inrush VA rating that matches or surpasses the value determined in Step 3.

SERIES CPT VOLTAGE REGULATION TABLE

CONTINUOUS VA TRANSFORMER NAMEPLATE	INRUSH VA @ 40% POWER FACTOR		
	85% SECONDARY VOLTAGE	90% SECONDARY VOLTAGE	95% SECONDARY VOLTAGE
50	177	139	102
100	350	275	203
150	715	554	400
250	1653	1264	895
350	2604	1947	1321
500	4004	3023	2090
750	6933	5088	3352
1000	10087	7340	4764
1500	14178	10232	6508
2000	17604	12669	8080
3000	39213	27539	16780
5000	68344	47498	28803

Note: It is advisable to select a control transformer with a power factor of 40%. Many circuit components, particularly electromagnetic devices, exhibit inherently low power factors approximating this value. By choosing a transformer with a 40% power factor, sufficient capacity is ensured to accommodate the diverse load characteristics within the circuit.

Specifications:

CONTROL POWER TRANSFORMER SPECIFICATIONS													
ELECTRICAL GENERAL													
	UNITS												
Rating	VA	50, 75, 100, 150, 250, 300, 500, 750, 1000, 1500, 2000, 3000, 5000											
Primary Voltage	V	220/230/240, 440/460/480		240, 480		550/575/600		0, 208, 277		0, 380, 400, 415		200/208, 220/230/240, 440/460/480	
Secondary Voltage	V	110/115/120, 220/230/240		24		110/115/120		120		110, 220		24/25/26, 110/115/120	
Frequency	Hz	50/60											
CURRENT RATINGS													
		Output Currents in Amp									**Approx. Heat Losses**	**Percentage Impedance (%Z)**	**Weight lb (kg)**
Output Voltage		**24**	**25**	**26**	**110**	**115**	**120**	**220**	**230**	**240**			
Rating in VA													
50		2.08	2	1.92	0.45	0.43	0.42	0.23	0.22	0.21	≤12W	10.30	2.50 [1.14]
75		3.13	3	2.88	0.68	0.65	0.63	0.34	0.33	0.31	≤16W	7.67	4.29 [1.95]
100		4.17	4	3.85	0.91	0.87	0.83	0.45	0.43	0.42	≤19W	7.74	4.41 [2.00]
150		6.25	6	5.77	1.36	1.30	1.25	0.68	0.65	0.63	≤27W	6.93	5.42 [2.46]
250		10.42	10	9.62	2.27	2.17	2.08	1.14	1.09	1.04	≤40W	4.23	7.26 [3.3]
350		12.50	12	11.54	2.73	2.61	2.50	1.36	1.30	1.25	≤47W	4.20	13.03 [5.91]
500		20.83	20	19.23	4.55	4.35	4.17	2.27	2.17	2.08	≤72W	4.53	13.42 [6.1]
750		31.25	30	28.85	6.82	6.52	6.25	3.41	3.26	3.13	≤102W	3.50	18.48 [8.4]
1000		40.00	38.40	36.92	8.73	8.35	8.00	4.55	4.35	4.17	≤130W	3.14	23.98 [10.9]
1500		-	-	-	13.64	13.04	12.50	6.82	6.52	6.25	≤185W	3.09	33.44 [15.2]
2000		-	-	-	18.18	17.39	16.67	9.09	8.70	8.33	≤222W	3.19	40.48 [18.04]
3000		-	-	-	27.27	26.09	25.00	13.64	13.04	12.50	≤315W	3.76	66.00 [30.0]
5000		-	-	-	45.45	43.48	41.67	22.73	21.74	20.83	≤500W	3.76	106.04 [48.2]
ENVIRONMENTAL													
Max. Operating Temperature	°C / °F	40 / 104											
Insulation Temperature	°C / °F	180 / 356											
MOUNTING/ WIRING													
Mounting Position		Any											
Fastening Method		Surface Mounting											
Type of Electrical Connection at Input/ Output for Main Circuit		Screw Type Terminal (Touch Safe)											
TERMINAL CAPACITY													
Wiring Size													
50 - 3000VA	AWG	18~10											
5000VA	AWG	16~6											
Terminal Torque													
50 - 3000VA	N.m	1.2											
5000VA	N.m	1.2											

RD-FD (Pri: 220/230/240, 440/460/480V, Sec: 110/115/120 & 220/230/240V)

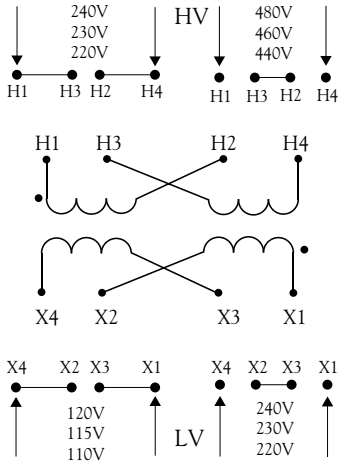

TS-DS (Pri: 550/575/600V, Sec: 110/115/120V)

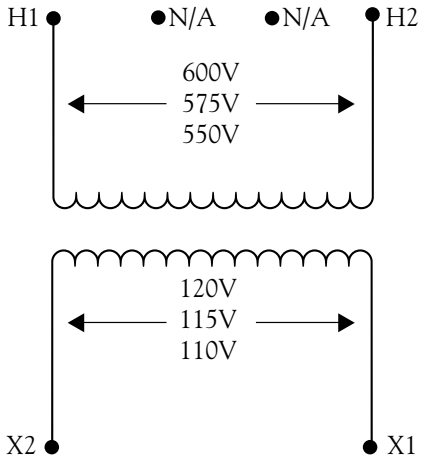

RD-CS (Pri: 240,480V, Sec: 24V)

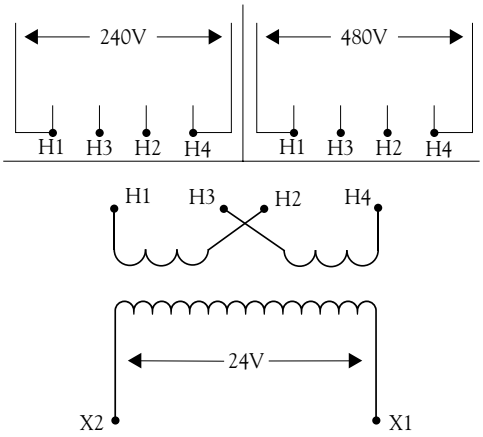

PM-DS (Pri: 208, 277V, Sec: 120V)

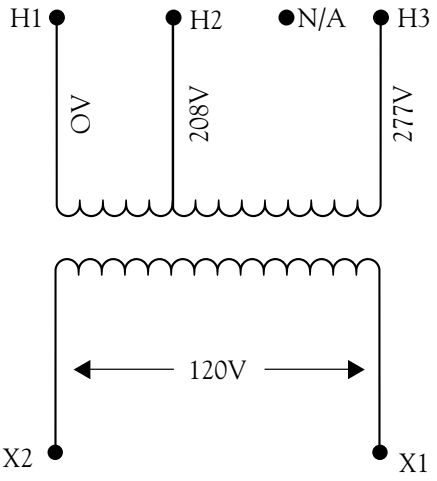

RM-FD (Pri: 380, 400, 415V, Sec: 110, 220V)

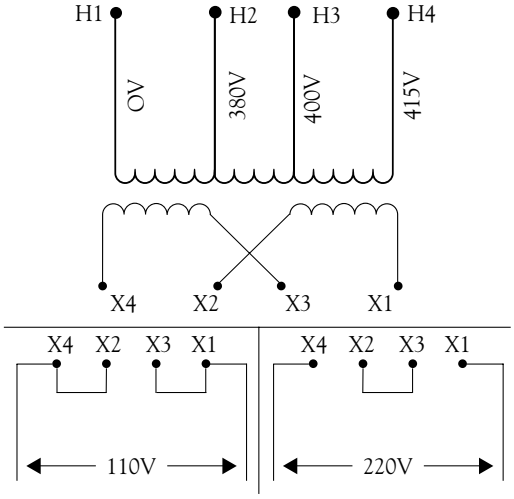

TM - DD (Pri: 200/208, 220/230/240, 440/460/480, Sec: 24/25/26, 110/115/120)

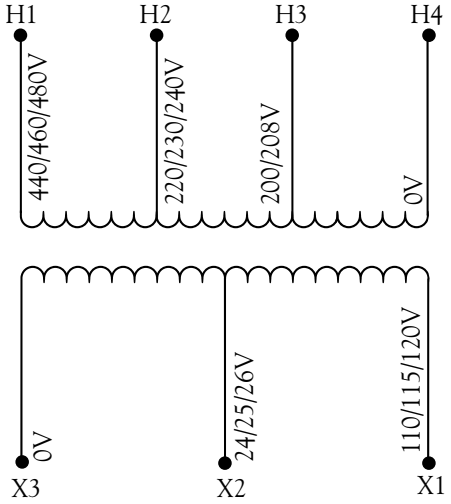

CPT1-0050- (RD-CS/RD-FD/TS-DS/PM-DS/RM-FD)

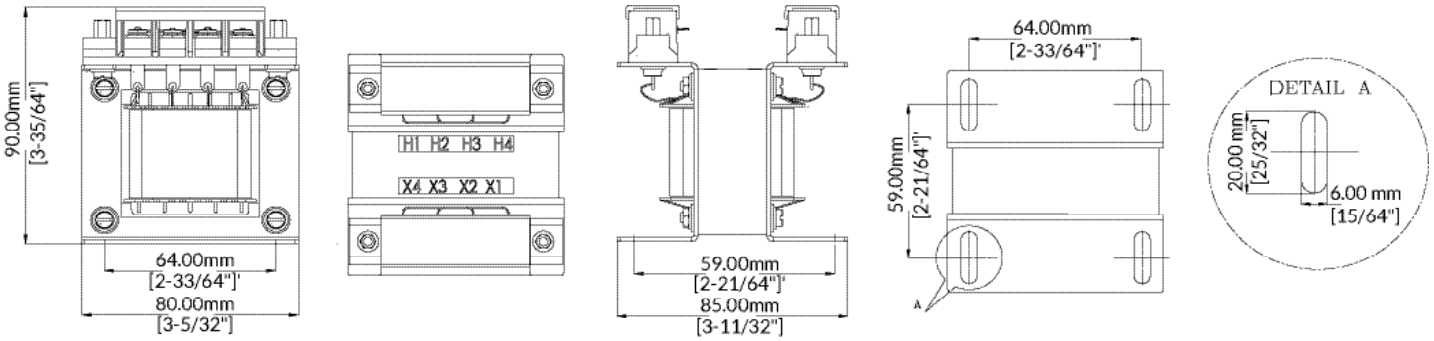

FRONT VIEW | TOP VIEW | SIDE VIEW | MOUNTING DIMENSIONS | DETAIL A

CPT1-0075/CPT1-0100- (RD-CS/RD-FD/TS-DS/PM-DS/RM-FD)

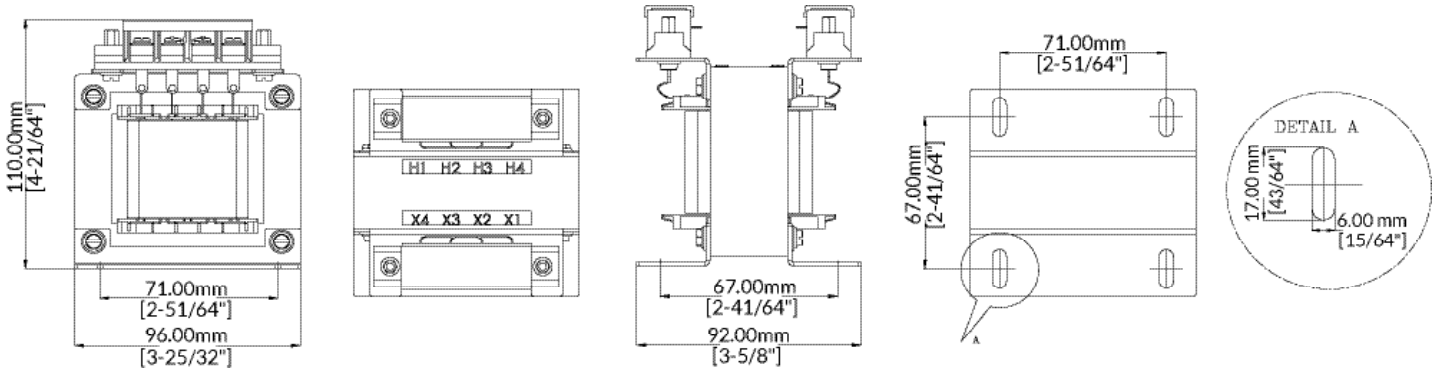

FRONT VIEW | TOP VIEW | SIDE VIEW | MOUNTING DIMENSIONS | DETAIL A

CPT1-0150- (RD-CS/RD-FD/TS-DS/PM-DS/RM-FD)

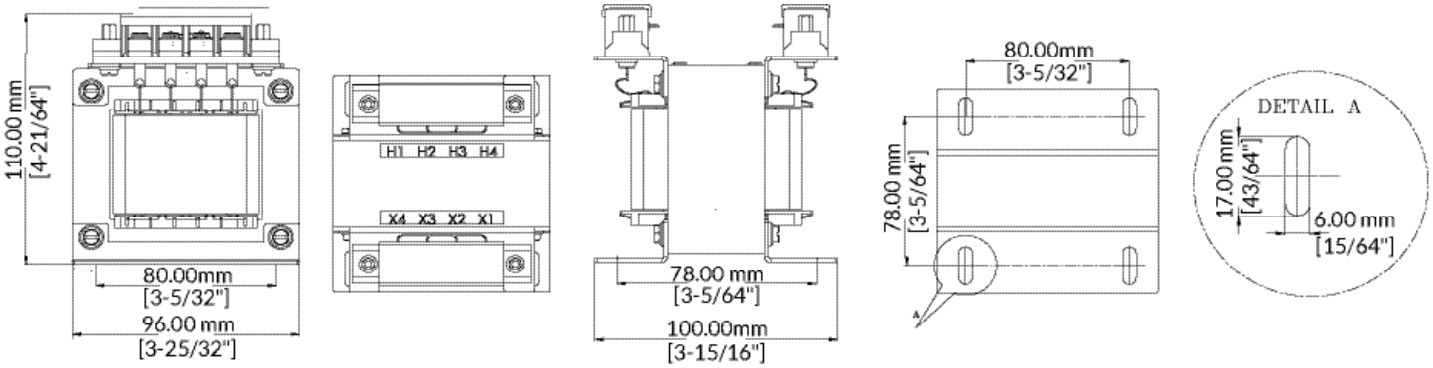

FRONT VIEW | TOP VIEW | SIDE VIEW | MOUNTING DIMENSIONS | DETAIL A

CPT1-0250- (RD-CS/RD-FD/TS-DS/PM-DS/RM-FD)

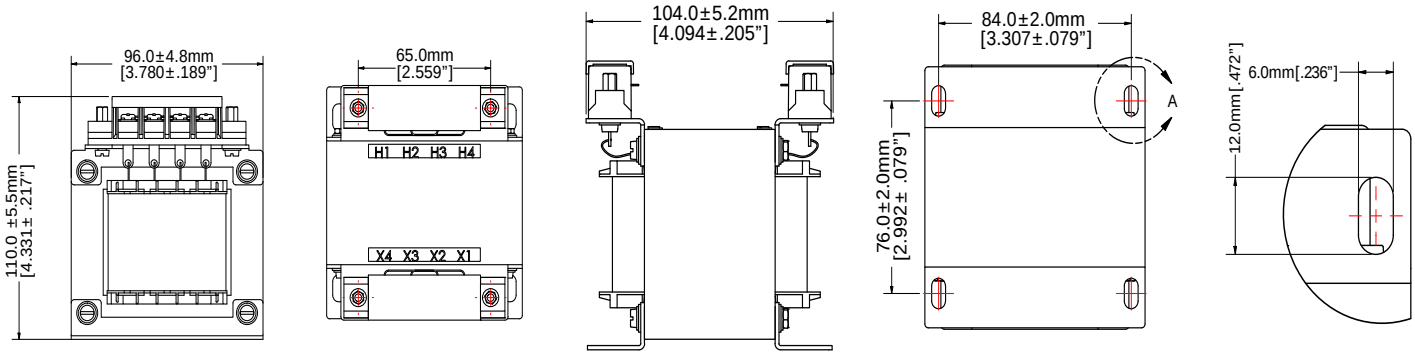

FRONT VIEW | TOP VIEW | SIDE VIEW | MOUNTING DIMENSIONS | DETAIL A

CPT1-0350- (RD-CS/RD-FD/TS-DS/PM-DS/RM-FD)

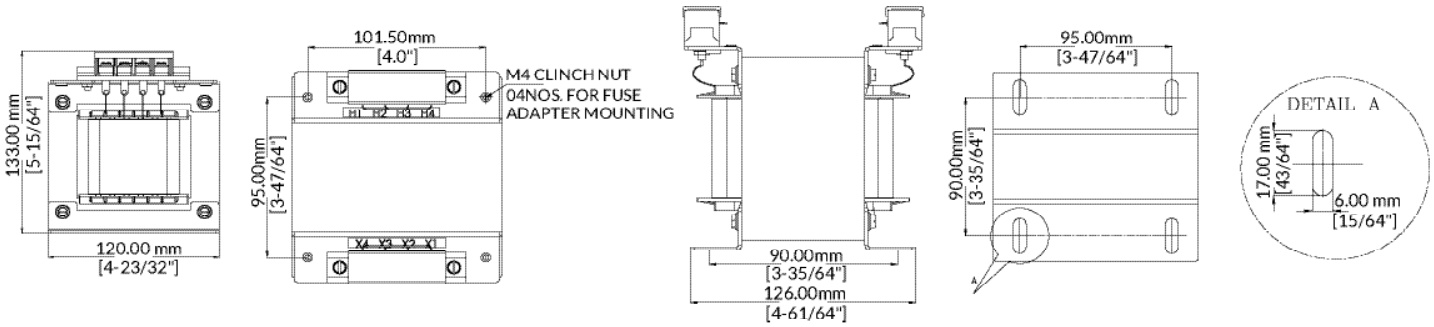

FRONT VIEW | TOP VIEW | SIDE VIEW | MOUNTING DIMENSIONS | DETAIL A

CPT1-0500- (RD-CS/RD-FD/TS-DS/PM-DS/RM-FD)

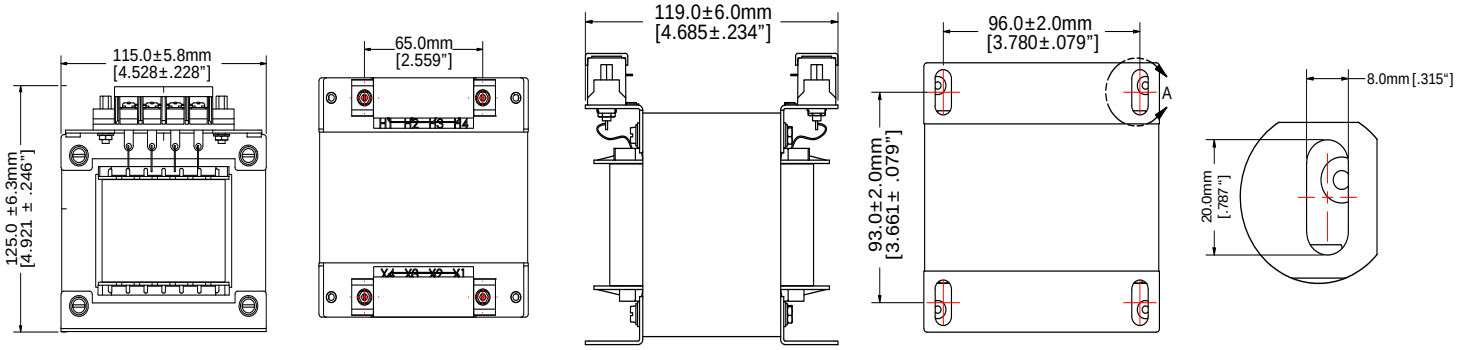

FRONT VIEW | TOP VIEW | SIDE VIEW | MOUNTING DIMENSIONS | DETAIL A

CPT1-0750- (RD-CS/RD-FD/TS-DS/PM-DS/RM-FD)

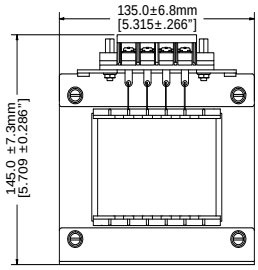

FRONT VIEW

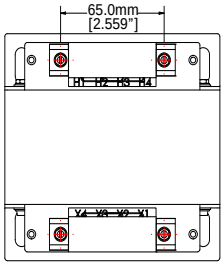

TOP VIEW

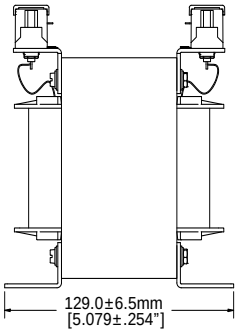

SIDE VIEW

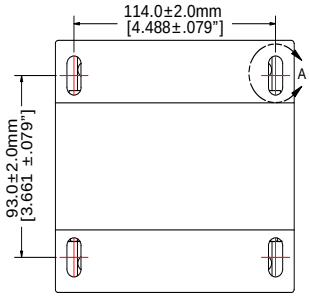

MOUNTING DIMENSIONS

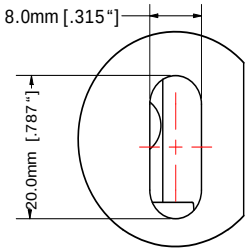

DETAIL A

CPT1-1000- (RD-CS/RD-FD/TS-DS/PM-DS/RM-FD)

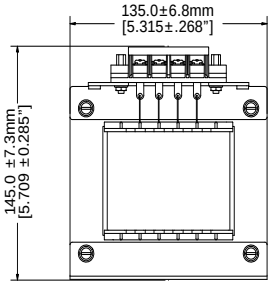

FRONT VIEW

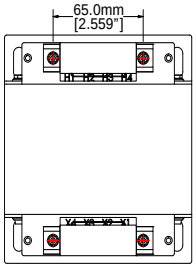

TOP VIEW

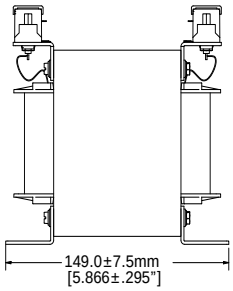

SIDE VIEW

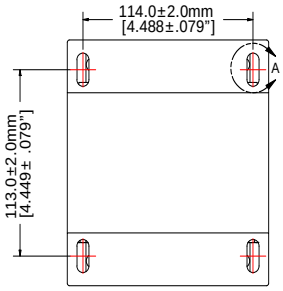

MOUNTING DIMENSIONS

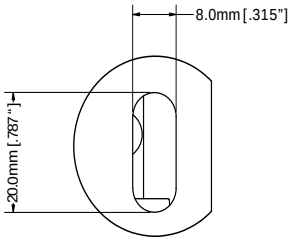

DETAIL A

CPT1-1500- (RD-FD/TS-DS/PM-DS/RM-FD)

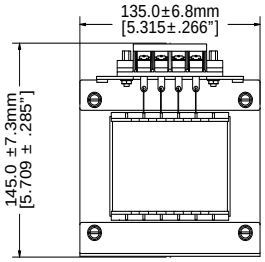

FRONT VIEW

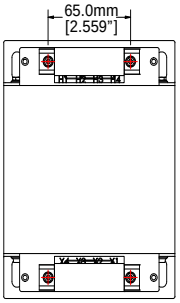

TOP VIEW

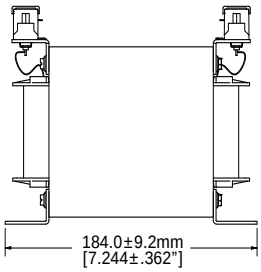

SIDE VIEW

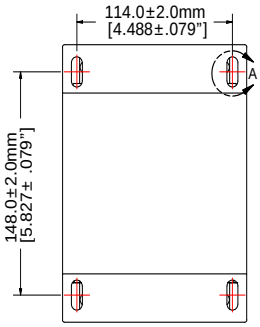

MOUNTING DIMENSIONS

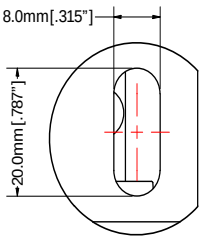

DETAIL A

CPT1-2000- (RD-FD/TS-DS/PM-DS/RM-FD)

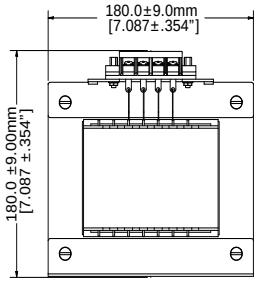

FRONT VIEW

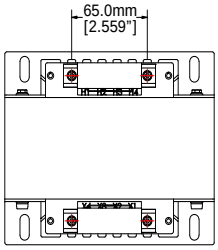

TOP VIEW

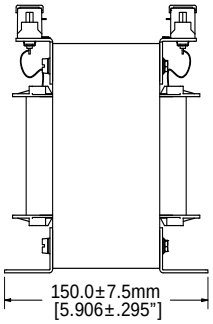

SIDE VIEW

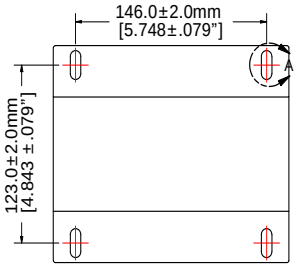

MOUNTING DIMENSIONS

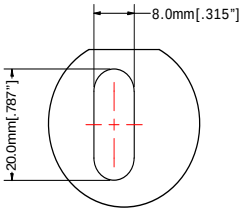

DETAIL A

CPT1-3000- (RD-FD/TS-DS/PM-DS/RM-FD)

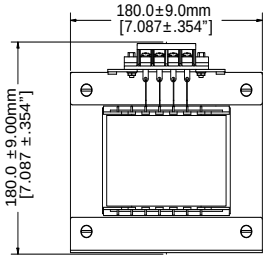

FRONT VIEW

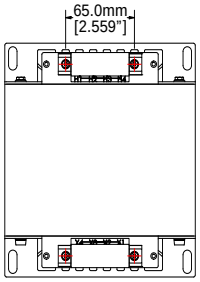

TOP VIEW

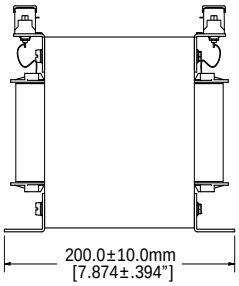

SIDE VIEW

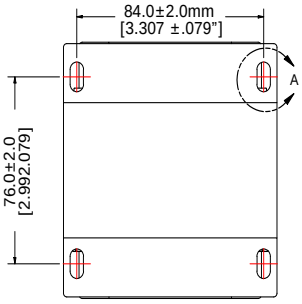

MOUNTING DIMENSIONS

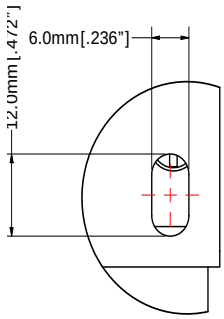

DETAIL A

CPT1-5000- (RD-FD/TS-DS/PM-DS/RM-FD)

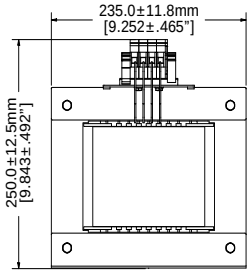

FRONT VIEW

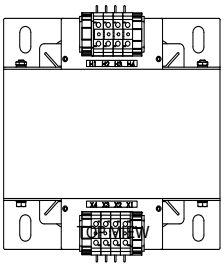

TOP VIEW

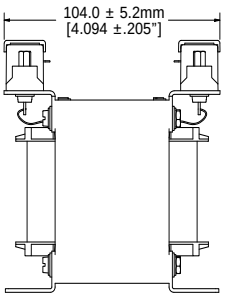

SIDE VIEW

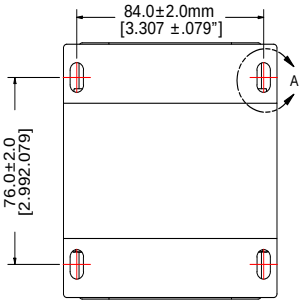

MOUNTING DIMENSIONS

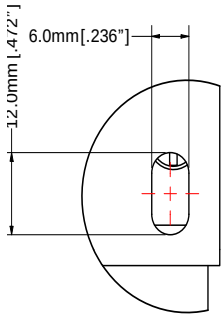

DETAIL A

CPT1-0050-TM-DD

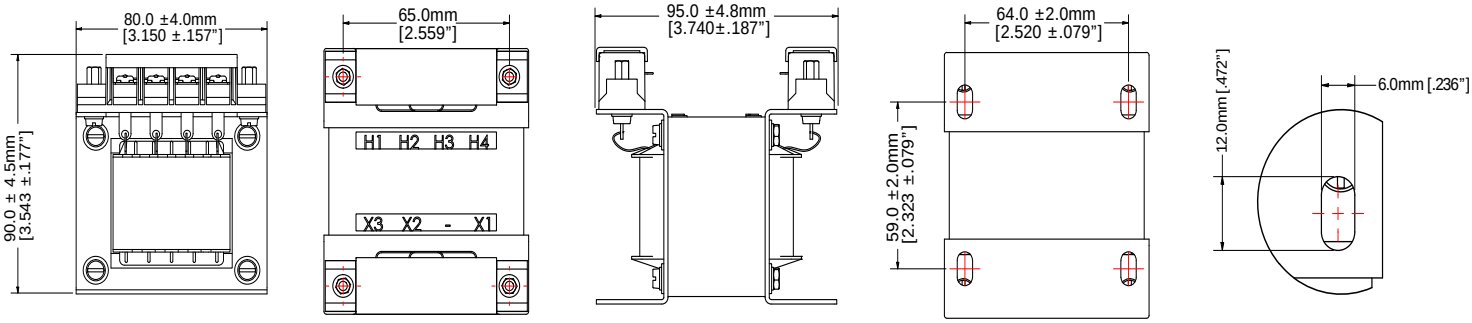

FRONT VIEW | TOP VIEW | SIDE VIEW | MOUNTING DIMENSIONS | DETAIL A

CPT1-0075-TM-DD

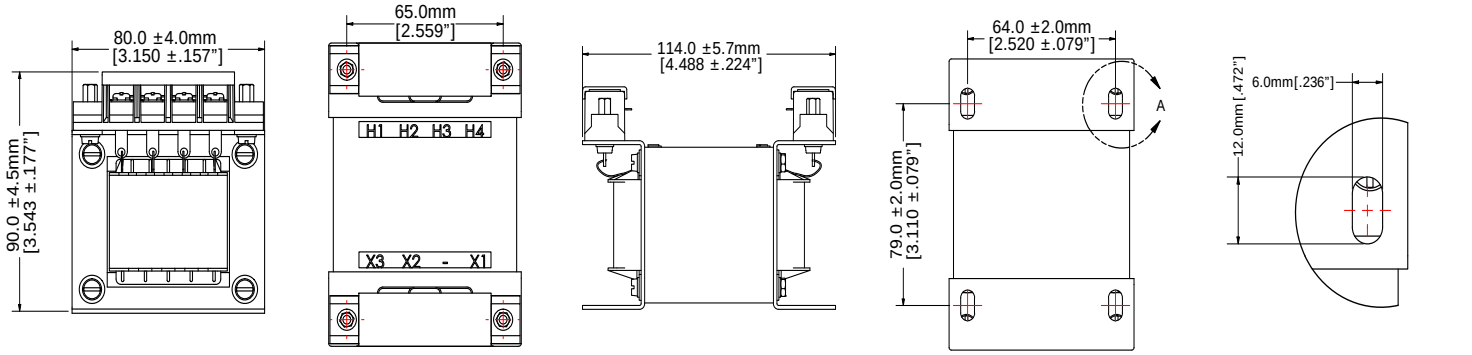

FRONT VIEW | TOP VIEW | SIDE VIEW | MOUNTING DIMENSIONS | DETAIL A

CPT1-0100-TM-DD

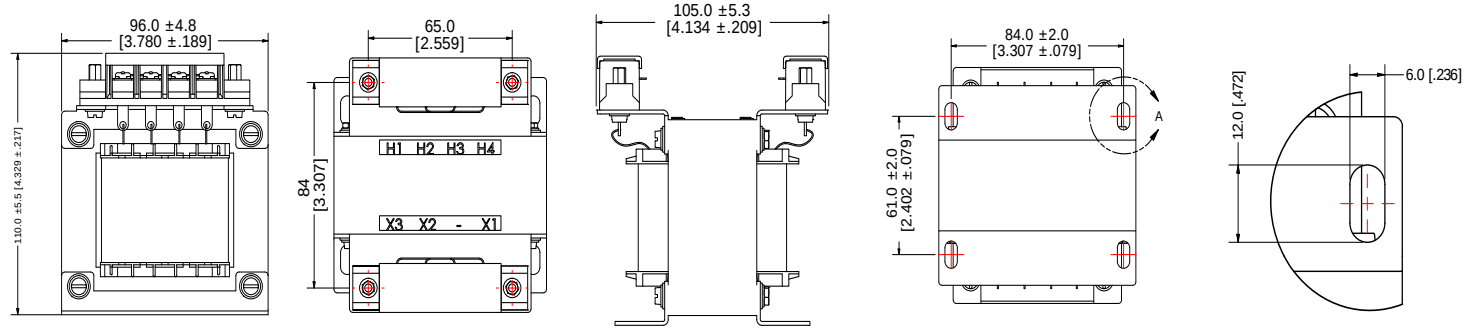

FRONT VIEW | TOP VIEW | SIDE VIEW | MOUNTING DIMENSIONS | DETAIL A

CPT1-0150-TM-DD

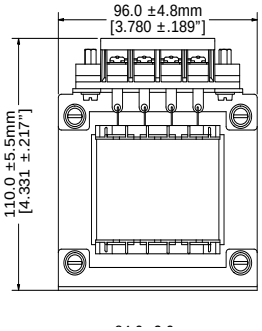

FRONT VIEW

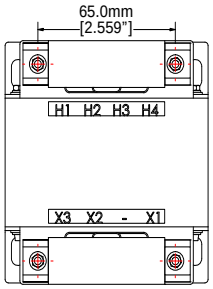

TOP VIEW

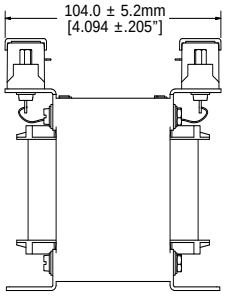

SIDE VIEW

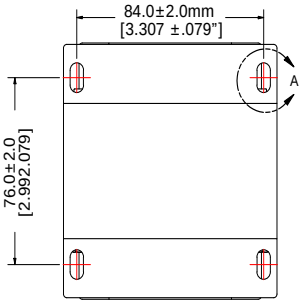

MOUNTING DIMENSIONS

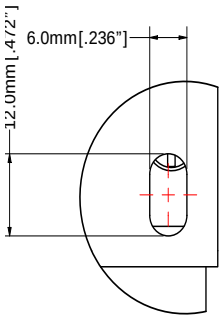

DETAIL A

CPT1-0250-TM-DD

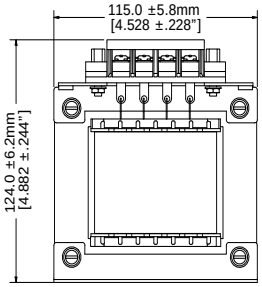

FRONT VIEW

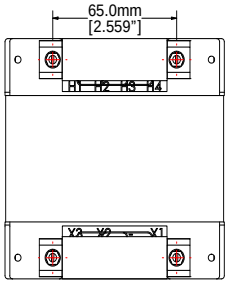

TOP VIEW

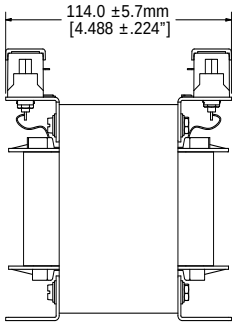

SIDE VIEW

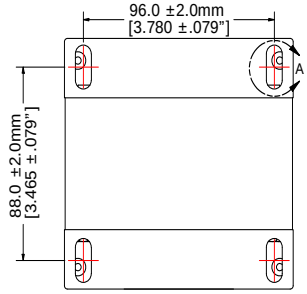

MOUNTING DIMENSIONS

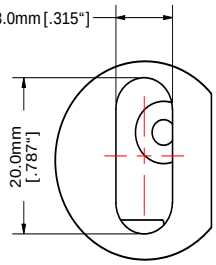

DETAIL A

CPT1-0350-TM-DD

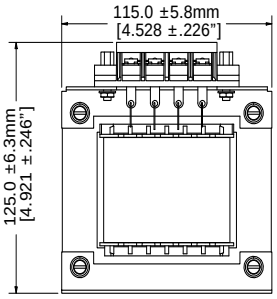

FRONT VIEW

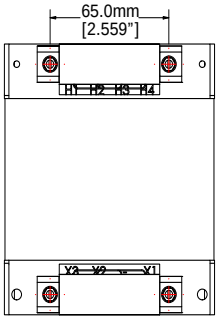

TOP VIEW

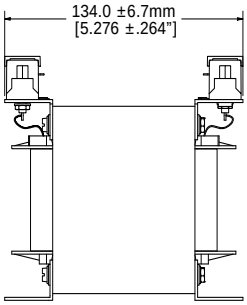

SIDE VIEW

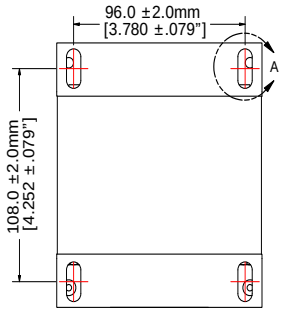

MOUNTING DIMENSIONS

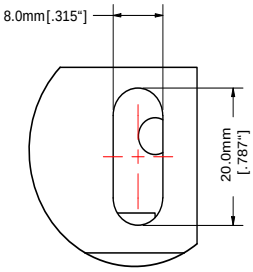

DETAIL A

CPT1-0500-TM-DD

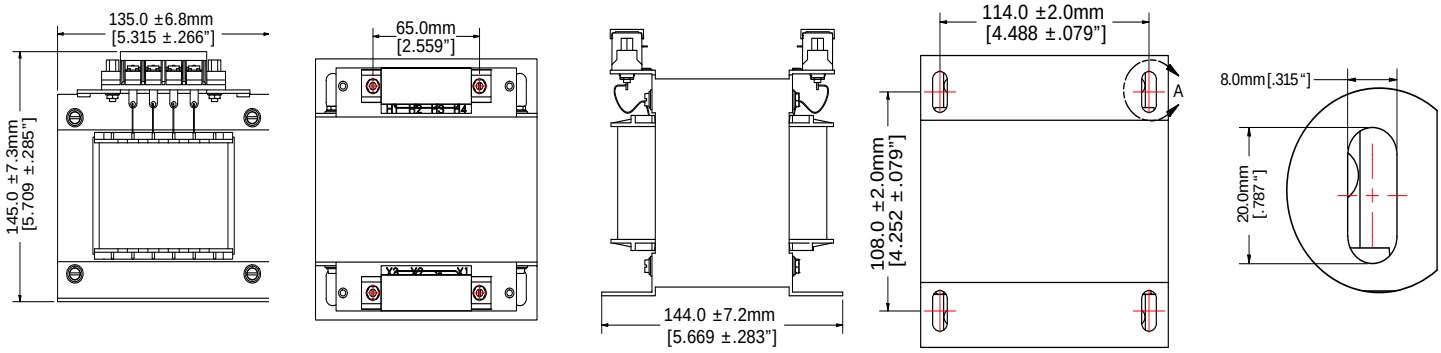

FRONT VIEW TOP VIEW SIDE VIEW MOUNTING DIMENSIONS DETAIL A

CPT-0750-TM-DD

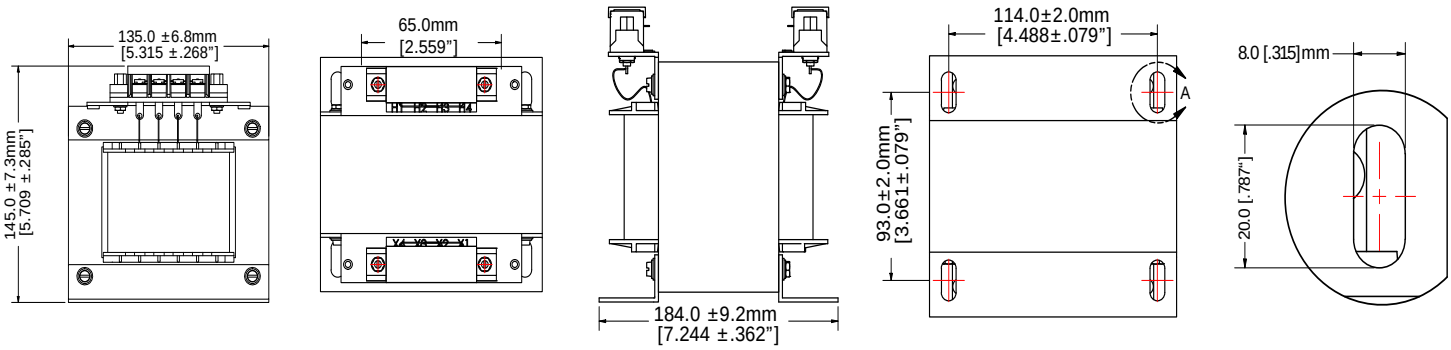

FRONT VIEW TOP VIEW SIDE VIEW MOUNTING DIMENSIONS DETAIL A

CPT1-1000-TM-DD

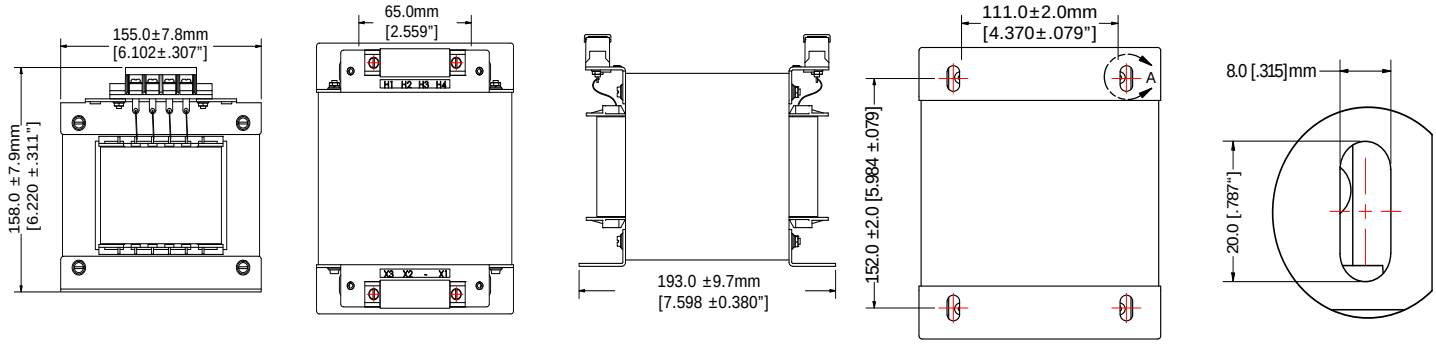

FRONT VIEW TOP VIEW SIDE VIEW MOUNTING DIMENSIONS DETAIL A

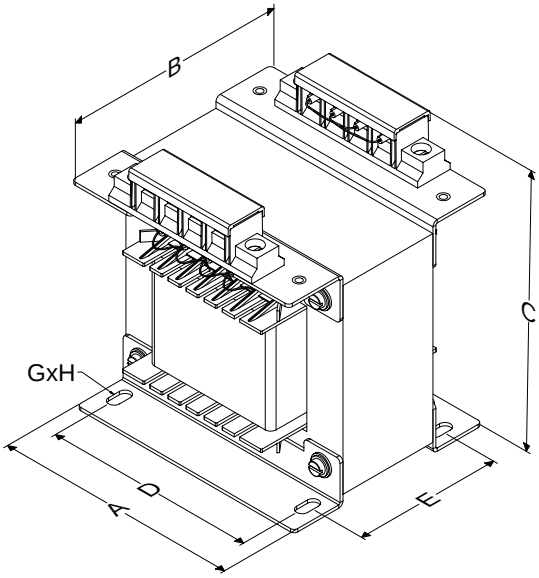

DIMENSION TABLE							
CODE	VA RATINGS	OVER ALL DIMENSION - IN[MM]			MOUNTING DIMENSION - IN[MM]		MOUNTING SLOT - IN[MM]
		A	B	C	D	E	G X H
RD-FD, TS-DS, RD-CS, PM-DS, RM-FD	50	3.15[80]	3.35[85]	3.54[90]	2.52[64]	2.32[59]	0.79[20] x 0.24[6]
	75	3.78[96]	3.62[92]	3.54[90]	2.64[67]	2.80[71]	0.67[17] x 0.24[6]
	100	3.78[96]	3.62[92]	3.54[90]	2.64[67]	2.80[71]	0.67[17] x 0.24[6]
	150	3.78[96]	3.94[100]	4.33[110]	3.15[80]	3.07[78]	0.67[17] x 0.24[6]
	250	3.78[96]	4.06[104]	4.33[110]	3.31[84]	2.99[76]	0.24[6] x 0.47[12]
	350	4.72[120]	4.96[126]	5.24[133]	3.74[95]	3.54[90]	0.67[17] x 0.24[6]
	500	4.53[115]	4.64[119]	4.92[125]	3.78[96]	3.66[93]	0.31[8] x 0.79[20]
	750	5.31[135]	5.03[129]	5.71[145]	4.49[114]	3.66[93]	0.31[8] x 0.79[20]
	1000	5.31[135]	5.81[149]	5.71[145]	4.49[114]	4.45[113]	0.31[8] x 0.79[20]
	1500	5.31[135]	7.18[184]	5.71[145]	4.49[114]	5.83[148]	0.31[8] x 0.79[20]
	2000	7.09[180]	5.85[150]	7.09[180]	5.75[146]	4.84[123]	0.31[8] x 0.79[20]
	3000	7.09[180]	7.8[200]	7.09[180]	6.5[165]	6.85[174]	0.31[8] x 0.79[20]
	5000	9.25[235]	9.79[251]	9.84[250]	7.4[188]	7.28[185]	0.47[12] x 1.02[26]
TM-DD	50	3.15[80]	3.71[95]	3.54[90]	2.52[64]	2.32[59]	0.24[6] x 0.47[12]
	75	3.15[80]	4.45[114]	3.74[95]	2.25[64]	3.11[79]	0.24[6] x 0.47[12]
	100	3.78[96]	4.1[105]	4.33[110]	3.31[84]	2.4[61]	0.24[6] x 0.47[12]
	150	3.78[96]	4.06[104]	4.33[110]	3.31[84]	2.99[76]	0.24[6] x 0.47[12]
	250	4.53[115]	4.45[114]	4.92[125]	3.78[96]	3.46[88]	0.31[8] x 0.79[20]
	350	4.53[115]	5.23[134]	4.92[125]	3.78[96]	4.25[108]	0.31[8] x 0.79[20]
	500	5.31[135]	5.62[144]	5.71[145]	4.49[114]	4.25[108]	0.31[8] x 0.79[20]
	750	5.31[135]	7.18[184]	5.71[145]	4.49[114]	5.83[148]	0.31[8] x 0.79[20]
	960	6.1[155]	7.53[193]	6.22[158]	4.37[111]	5.98[152]	0.31[8] x 0.67[20]

30MM INDUSTRIAL PILOT DEVICES

c3controls' 30mm Industrial Pilot Devices offer superior quality at an affordable price. These modular devices feature a rugged, all-polyester construction, are UL listed and are rated Type 4/4X as standard for watertight and corrosion resistance. c3's pilot devices are also listed for Type 1, 2, 3, 3R, 12 and 13 requirements.

Section 13

Contact Blocks	4
Push Buttons	6
Special Operators	17
Pilot Lights	20
Selector Switches	26
Legend Plates	30
Accessories	32
Specifications	34
Dimensions	36

PROVEN

Conformity to Standards:

PILOT DEVICES

UL 508, 1604

CSA C22.2 No. 14, 213

IEC 60947-1, 60947-5-1

MULTI-VOLTAGE PILOT LIGHTS

UL 508, 1604

IEC 60947-1, 60947-5-1

Certifications:

UL File #: E68568 (Guide NKCR, NKCR7), E157436 (Guide NOIV)

CSA File #: LR47446

CE Marked (per EU Low Voltage Directive 2006/95/EC and RoHS Directive 2011/65/EU)

UL File #: E68568 (Guide NKCR, NKCR7), E157436 (Guide NOIV)

CE Marked (per EU Low Voltage Directive 2006/95/EC and RoHS Directive 2011/65/EU)

Visit www.c3controls.com to download product certifications.

NOTE: The scope (range, description, price, specifications, dimensions, etc.) of the product featured in this section is subject to change without notice. Refer to www.c3controls.com for product updates.

30MM INDUSTRIAL PILOT DEVICES

All our products are fully certified, rated, and backed by our 36-month warranty to meet the needs of the machine builder, and our 30mm Industrial Pilot Devices are no exception. Check out the incredible features in the chart below!

DELIVERING SUPERIOR PRODUCT QUALITY AND MANUFACTURING EXCELLENCE	
✓ **Proven**	Our 30mm industrial operators are UL Listed, CSA Certified and CE marked meeting global standards requirements.
✓ **Easy to Install**	Our "snap-on" contact blocks are color coded for quick circuit identification and feature 35° angled captive terminal screws and self-lifting pressure plates for fast and easy wiring.
✓ **Simple Customization**	Our light modules come with various lens color options for appropriate operator interface and are available in incandescent or our LED lamps with leakage protection.
✓ **Rugged Design**	Optional polyester or polished aluminum clamp rings with coarse 16 pitch threads for quick and easy utilization that won't cross thread or strip.
✓ **Visible Certifications**	Our product certifications and electrical ratings are clearly marked on the outside of the contact blocks for easy reference during installation.
✓ **Heavy Duty**	Polyester construction provides superior durability, corrosion resistance, moisture rejection and electrical insulation.
✓ **Flexible**	Our contact blocks can be stacked 4 deep and up to 2 across for a total of 8 circuits, providing the flexibility to operate multiple control circuits from a single operator.
✓ **Convenient**	Reduce inventory with our interchangeable modular design, providing endless options for appropriate operator interface.
✓ **Environmentally Secure**	With 4/4X and IP65 ratings, our 30mm line of pilot devices are built to last and withstand dust, corrosion, ice, and rain.
✓ **36-Month Warranty***	Every product is backed by our 36-Month Warranty—giving you confidence in the quality, reliability, and performance of components designed for the most demanding applications.
✓ **Guaranteed Same-Day Shipping***	Product availability reduces inventory, and improves cash-flow—saving you money. With c3controls any order for standard catalog items received by 6:00pm ET is guaranteed to ship same-day.
✓ **Advantage Pricing**	Our approach to product development, manufacturing, and focus on servicing the OEM and Electrical Equipment Builder reduces cost. The result—the best value in the industry.

*See c3controls Terms & Conditions

> *By utilizing the 30mm Multi-Voltage LED Pilot Lights from c3controls, there is no need for us to specify several devices for one job. With one product, we can meet every one of our needs.*

Scott Grinwis, Inside Sales • **Kent Industries**

Momentary Push Button

Emergency Stop

Pilot Light

Selector Switch

UNIQUE PRODUCT LINE FEATURES

METAL ON THE INSIDE

c3controls 30mm Emergency Stop devices contain a solid brass detent mechanism ensuring reliable operation in emergency stop applications, and providing safe interruption of circuits and longer life.

EXCLUSIVE MULTI-VOLTAGE LIGHTS

c3controls state-of-the-art multi-voltage light modules—the only U.S. engineered multi-voltage light in the industry!—operate at any voltage from 20V to 277V AC or DC without losing intensity.

U-CUP SEAL

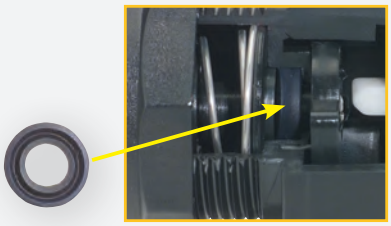

Our revolutionary U-Cup seal is infused with a Teflon coating to eliminate cracking when exposed to harsh conditions and keeps water, oils, and dust away from the contact blocks.

INTERNAL SELF-LUBRICANT

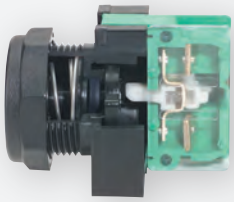

All frictional parts are molded with an internal self-lubricant to provide outstanding wear without troublesome greases used by others.

ONE CAM DESIGN

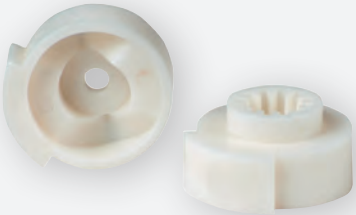

Our single cam design eliminates the need for multiple cam and selector switch configurations, reducing inventory and saves you labor time and costs.

RUBBER BOOTS

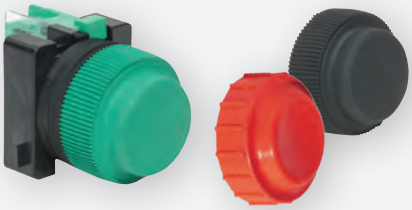

Our state-of-the-art rubber boots are available in both Neoprene and Fluorosilicone, and protect the operators and the circuits behind them from harsh chemicals and climates.

FIND IT FAST

30mm Industrial Pilot Devices

- Certifications
- Specifications
- Dimension Drawings
- Installation Instructions
- Easy to Buy

www.c3controls.com

SELECT YOUR CONTACT BLOCK

MODULAR CONTACT BLOCK CONFIGURATION

CODE	DESCRIPTION	CONTACT SYMBOL	COLOR	LIST
	SILVER CONTACTS			
CBNO	Normally Open Contact Block		Green/Clear	$13.00
CBNO-IP20	Normally Open Contact Block with IP20 Guarded Terminals		Green/Clear	$17.00
CBNC	Normally Closed Contact Block		Red/Clear	$13.00
CBNC-IP20	Normally Closed Contact Block with IP20 Guarded Terminals		Red/Clear	$17.00
CBEM	Early Make Contact Block		White/Clear	$17.00
CBEM-IP20	Early Make Contact Block with IP20 Guarded Terminals		White/Clear	$21.00
CBDB	Delayed Break Contact Block		Black/Clear	$17.00
CBDB-IP20	Delayed Break Contact Block with IP20 Guarded Terminals		Black/Clear	$21.00
	GOLD PLATED CONTACTS‡			
CBNOG	Normally Open Contact Block‡		Green/Amber	$22.00
CBNOG-IP20	Normally Open Contact Block with IP20 Guarded Terminals‡		Green/Amber	$26.00
CBNCG	Normally Closed Contact Block‡		Red/Amber	$22.00
CBNCG-IP20	Normally Closed Contact Block with IP20 Guarded Terminals‡		Red/Amber	$26.00
CBEMG	Early Make Contact Block‡		White/Amber	$26.00
CBEMG-IP20	Early Make Contact Block with IP20 Guarded Terminals‡		White/Amber	$30.00
CBDBG	Delayed Break Contact Block‡		Black/Amber	$26.00
CBDBG-IP20	Delayed Break Contact Block with IP20 Guarded Terminals‡		Black/Amber	$30.00

STANDARD RATING DESIGNATIONS

A600 RATING DESIGNATION

A600 (7,200 VA Make and 720 VA Break),
600V AC Maximum
Maximum Continuous Thermal Current, Ith: 10A

P300 RATING DESIGNATION

P300 (138 VA Make and 138 VA Break),
250V DC Maximum
Maximum Continuous Thermal Current, Ith: 5A

‡NOTE: Gold plated contacts are not available for same-day shipping.Contact our Customer First Team for lead times and minimum order quantities.

DISCOUNT SCHEDULE E

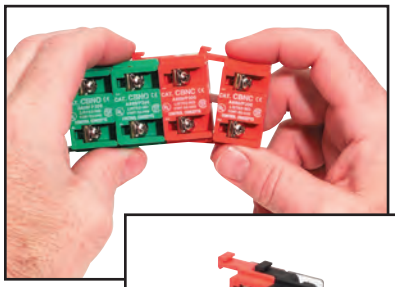

Our Contact Blocks save you time and money by offering the flexibility to operate multiple control circuits from a single pilot device. Most operators can be stacked 4 deep and up to 2 across, providing a total of 8 circuits per operator in any combination. Compared to others, our quick install snap-on feature makes installing multiple blocks a "snap" — they install in less time than it takes to pick up a screwdriver! And our heavy-duty construction ensures that these contact blocks stay connected.

Tired of wiring contact blocks in cramped spaces?
Our unique 35 degree angled terminals provide ease of wiring for quick installation. In fact, you can wire the contact blocks outside the tight space of the control panel, then simply "snap-on" to the operator. All terminal screws have self-lifting captive wire clamps to speed wiring.

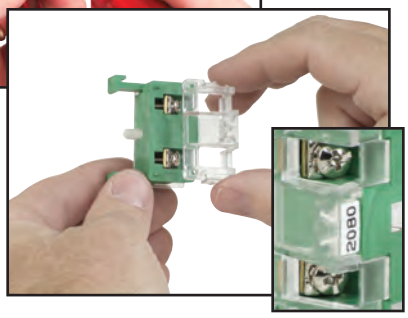

Enhanced safety with field installable IP20 terminal guards are transparent to maintain terminal visibility. Their construction provides easy access to the device terminals - making wiring fast and convenient, and they snap securely in place without the use of tools. NOTE: IP20 terminal guards must be installed before wiring.

For convenient terminal marking our IP20 terminal guards utilize Series WTB2 markers (see Section 22 Page 32), simplifying wiring and troubleshooting.

30mm Standard Contact Blocks

Our standard contact blocks are stackable 4 deep and up to 2 across on most operators for a total of 8 circuits per operator. They are color coded for instant circuit identification to minimize wiring errors and to expedite the wiring process. You can combine contact block types to achieve your desired function.

Also refer to Section 14 Pages 4 & 5 for our complete selection of Hermetically Sealed and Factory Sealed Contact Blocks in our 30mm H-Line section.

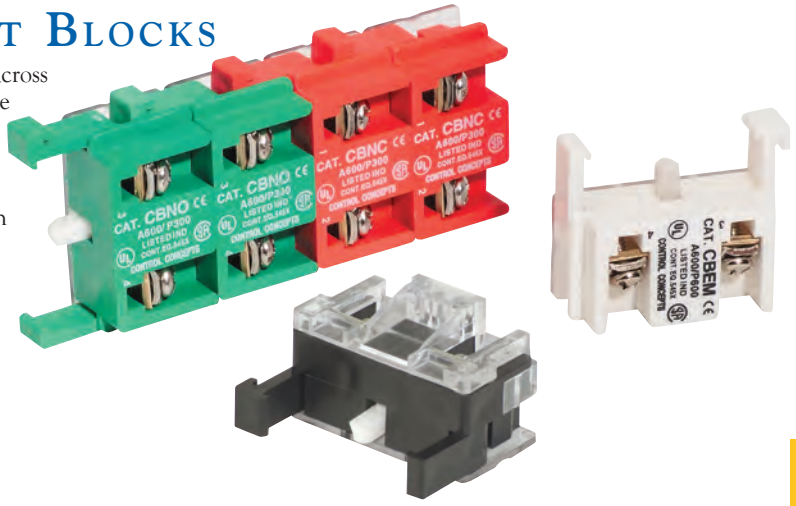

UNIQUE PRODUCT FEATURES

c3controls manufactures the most innovative, user-friendly line of Contact Blocks on the market today!

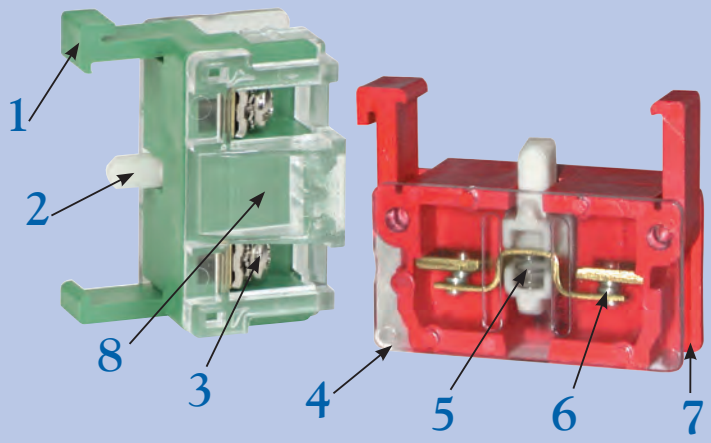

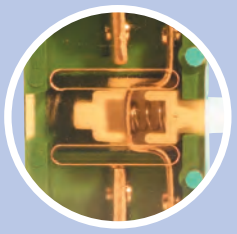

NOTE: Gold plated contacts are available on standard blocks for dry circuit applications. The cover will be gold (amber) in place of clear.

1. Vibration resistant snap-on assembly simplifies installation.
2. Self-lubricating thermoplastic stroker prevents sticking and corrosive build-up that is often associated with other competitor products.
3. 35 degree angle plated steel terminal screws with captive pressure plates facilitate wiring and protect against corrosion.
4. Clear V-0 plastic covers resist combustion and aid in visual confirmation of circuit configuration.
5. Stainless steel spring for protection in corrosive environments.
6. Built-in self-wiping cleaning action and high point contact pressure for low-level switching. Silver contact rivets provide long life in normal control circuits.
7. Color-coded body for quick circuit identification (green = NO, red = NC, white = EM, black = DB).
8. Optional IP20 terminal guards protect against accidental contact with live parts. Can be ordered separately as an accessory or factory assembled providing the convenience of a single catalog number.

Available Contact Blocks for Ordinary Locations

CBNO

CBNC

CBEM

CBDB

CBDB-IP20

IT'S EASY TO BUILD YOUR OWN PUSH BUTTON

Simply pick the code number from each of the sections below and combine them to build your part number.

Momentary Push Buttons (Non-Illuminated)

PBO – ____ ____ ____ – ____ / ____ – ____

I *II* *III* *IV* *V* *VI* *VII*

Example: To build one of our most popular Push Buttons, the part number would be **PBO + II + III + IV + V + VI + VII** or **PBO-FCGN-NO-IP20**

I. OPERATOR TYPE

CODE	DESCRIPTION	LIST
PBO	Push Button Operator	$18.00

II. CLAMP RING

CODE	DESCRIPTION	LIST
	FOR USE WITH ALL CAP TYPES (EXCLUDES RUBBER BOOTS)	
(Blank)	Black Polyester (Type 4X)	—
A	Aluminum (Type 4)*	$ 4.30
	FOR USE WITH RUBBER BOOTS	
(Blank)	Clamp Ring Included**	—

*NOTE: Aluminum clamp rings are NOT an option for SMC or SJC cap types.

**NOTE: Rubber boots come standard with a built in clamp ring and thrust washer. When installing the operator we recommend that the thrust washer be placed behind the panel to prevent rotation.

III. CAP TYPE

CODE	DESCRIPTION	LIST
(Blank)	Operator less	—
FC	Flush	$ 5.20
GFC	Guarded Flush	$12.00
XC	Extended	$ 5.20
GXC	Guarded Extended	$12.00
MC	Mushroom	$17.00
JMC	Jumbo Mushroom	$22.00
SMC	Shrouded Mushroom*	$26.00
SJC	Shrouded Jumbo Mushroom*	$30.00
RB	Neoprene Rubber Boot‡	$32.00
HRB	Fluorosilicone Rubber Boot‡	$39.00

*NOTE: Aluminum clamp rings are NOT an option for SMC or SJC.

‡NOTE: Rubber boots come standard with a built in clamp ring and thrust washer. When installing the operator we recommend that the thrust washer be placed behind the panel to prevent rotation.

IV. CAP COLOR

CODE	COLOR
	ALL CAP TYPES (EXCLUDES RUBBER BOOTS)
(Blank)	Operator less Cap
BK	Black
BE	Blue
GN	Green
GY	Grey
RD	Red
WE	White
YW	Yellow
	RUBBER BOOTS
BK	Black
GN	Green
RD	Red
YW	Yellow

V. CONTACT BLOCK CONFIGURATION (LEFT SIDE)

CODE	DESCRIPTION	LIST
(Blank)	Operator without Contact Blocks	—
NO	1 Normally Open Contact Block	$13.00
NC	1 Normally Closed Contact Block	$13.00
EM	1 Early Make Contact Block	$17.00
DB	1 Delayed Break Contact Block	$17.00
NO-NO	2 Normally Open Contact Blocks	$26.00
NC-NC	2 Normally Closed Contact Blocks	$26.00
NO-NC	1 Normally Open and 1 Normally Closed Contact Blocks	$26.00

VI. CONTACT BLOCK CONFIGURATION (RIGHT SIDE)

(USE CHART V FROM ABOVE)

VII. OPTIONS

CODE	DESCRIPTION	LIST/PC*
(Blank)	None	—
IP20	IP20 Guard	$ 4.00

*NOTE: When choosing the IP20 option, in order to achieve IP20 protection a terminal guard must be assembled on each contact block configuration, increasing the List price $4.00 for each guard.

DISCOUNT SCHEDULE **E**

Mix and Match Any Color and Momentary Non-Illuminated Push Button Cap

Flush Cap | Guarded Flush Cap | Extended Cap | Guarded Extended Cap | Mushroom Cap (1-1/2" (38mm) dia.) | Jumbo Mushroom Cap (2-1/4" (57mm) dia.) | Shrouded Mushroom Cap (1-1/2" (38mm) dia.) | Shrouded Jumbo Mushroom Cap (2-1/4" (57mm) dia.) | Rubber Boot

30mm Momentary Non-Illuminated Push Buttons

c3controls goes the extra step to make sure that our products outlast the competition. Our 30mm Momentary Non-Illuminated Push Buttons are durable and flexible for a variety of uses. All c3controls 30mm operators are UL Listed and are rated Type 4/4X as standard for watertight and corrosion resistance. In addition, operators are also listed for Type 1, 2, 3, 3R, 12 and 13, and meet global standards requirements.

Product features include:

- Polyester construction for superior corrosion resistance, moisture rejection and electrical insulation.
- Polyester or polished aluminum clamp rings with coarse 16 pitch threads.
- Available in both Neoprene and Fluorosilicone, our state-of-the-art rubber boots protect the operators and the circuits behind them from harsh chemicals and climates.
- #6 terminal screws with self-lifting captive wire clamps accommodate #22 through two #12 AWG wires (0.5 - 4mm^2) per terminal.
- Operators conveniently mount in a round 1-13/64" (30.5mm) hole that is directly interchangeable with competitors units and eliminates the labor required for notching.

UNIQUE PRODUCT FEATURES

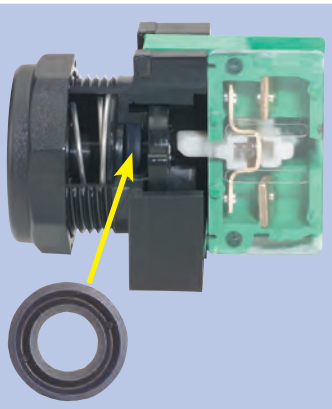

1. Our revolutionary U-Cup seal is infused with a Teflon coating to eliminate cracking when exposed to harsh conditions such as heat, dryness and sunlight. The U-Cup seal rides easily along the stroker and keeps water, oils, dust and other corrosive particles in the air away from the contact blocks. This U-cup seal also acts like a squeegee and forms a permanent watertight seal that meets Type 4/4X with or without a rubber boot. *In fact, our push button was the first to be rated Type 4X without using a rubber boot!*
2. Our push buttons modular design provides endless options for appropriate operator interface with a variety of interchangeable cap types and colors which ultimately will save you time and money by reducing your inventory.

Some of Our Popular Configurations:

SNAP-ON IP20 TERMINAL GUARDS

protect against accidental contact with live parts.
See page 32.

MOMENTARY NON-ILLUMINATED PUSH BUTTON OPERATORS WITH POLYESTER CLAMP RING (TYPE 4X)

		FLUSH CAP		EXTENDED CAP	
	CAP COLOR	CATALOG NUMBER	LIST	CATALOG NUMBER	LIST
1NO	Black	PBO-FCBK-NO	$36.20	PBO-XCBK-NO	$36.20
	Green	PBO-FCGN-NO	$36.20	PBO-XCGN-NO	$36.20
	Red	PBO-FCRD-NO	$36.20	PBO-XCRD-NO	$36.20
1NC	Black	PBO-FCBK-NC	$36.20	PBO-XCBK-NC	$36.20
	Green	PBO-FCGN-NC	$36.20	PBO-XCGN-NC	$36.20
	Red	PBO-FCRD-NC	$36.20	PBO-XCRD-NC	$36.20
1 NO	Black	PBO-FCBK-NO/NC	$49.20	PBO-XCBK-NO/NC	$49.20
&	Green	PBO-FCGN-NO/NC	$49.20	PBO-XCGN-NO/NC	$49.20
1 NC	Red	PBO-FCRD-NO/NC	$49.20	PBO-XCRD-NO/NC	$49.20

IT'S EASY TO BUILD YOUR OWN PUSH BUTTON

Simply pick the code number from each of the sections below and combine them to build your part number.

Maintained Push Buttons (Non-Illuminated)

2-Position Push-Pull

PBO – _____ **PP** _____ _____ – _____ / _____ – _____

I *II* *III* *IV* *V* *VI* *VII* *VIII*

Example: To build one of our most popular Push Buttons, the part number would be **PBO + II + PP + IV + V + VI + VII + VIII** or **PBO-PPMCGN-NO**

I. OPERATOR TYPE

CODE	DESCRIPTION	LIST
PBO	Push Button Operator	$18.00

II. CLAMP RING

CODE	DESCRIPTION	LIST
(Blank)	Black Polyester (Type 4X)	—
Y	Yellow Polyester (Type 4X)	$ 4.30
A	Aluminum (Type 4)	$ 4.30

III. CAP FUNCTION

CODE	DESCRIPTION	LIST
PP	Push-Pull Maintained	$57.00

The 2-Position Push-Pull is maintained in both the push and pull positions. The primary application is "push" to "stop" and "pull" to "start".

O = OPEN X = CLOSED

MAINTAINED IN/MAINTAINED OUT

1 CIRCUIT (1 NC)			2 CIRCUIT (1 NO/1 NC)			2 CIRCUIT (2 NC)		
	OUT	IN		OUT	IN		OUT	IN
NC	X	O	NC	X	O	NC	X	O
			NO	O	X	NC	X	O

IV. CAP TYPE

CODE	DESCRIPTION	LIST
MC	Mushroom	—
JMC	Jumbo Mushroom	$ 8.60

V. CAP COLOR

CODE	COLOR
BK	Black
BE	Blue
GN	Green
GY	Grey
RD	Red
WE	White
YW	Yellow

DISCOUNT SCHEDULE **E**

VI. CONTACT BLOCK CONFIGURATION (LEFT SIDE)

CODE	DESCRIPTION	LIST
(Blank)	Operator without Contact Blocks	—
NO	1 Normally Open Contact Block	$13.00
NC	1 Normally Closed Contact Block	$13.00
EM	1 Early Make Contact Block	$17.00
DB	1 Delayed Break Contact Block	$17.00
NO-NO	2 Normally Open Contact Blocks	$26.00
NC-NC	2 Normally Closed Contact Blocks	$26.00
NO-NC	1 Normally Open and 1 Normally Closed Contact Blocks	$26.00

VII. CONTACT BLOCK CONFIGURATION (RIGHT SIDE)

(USE CHART VI FROM ABOVE)

VIII. OPTIONS

CODE	DESCRIPTION	LIST/PC*
(Blank)	None	—
IP20	IP20 Guard	$ 4.00

*NOTE: When choosing the IP20 option, in order to achieve IP20 protection a terminal guard must be assembled on each contact block configuration, increasing the List price $4.00 for each guard.

SNAP-ON IP20 TERMINAL GUARDS

protect against accidental contact with live parts.
See page 32.

Mix and Match Any Color and Push-Pull Maintained Non-Illuminated Cap

Mushroom Cap (1-1/2" (38mm) dia.) — Jumbo Mushroom Cap (2-1/4" (57mm) dia.)

30mm Maintained Non-Illuminated Push Buttons

The most rugged Emergency Stop Available in the Industry!

All c3controls 30mm operators are UL Listed and are rated Type 4/4X as standard for watertight and corrosion resistance. In addition, operators are also listed for Type 1, 2, 3, 3R, 12 and 13, and meet global standards requirements.

Product features include:

- Polyester construction for superior corrosion resistance, moisture rejection and electrical insulation.
- Polyester or polished aluminum clamp rings with coarse 16 pitch threads that easily thread on and won't cross thread or strip.
- All cap types are secured by the clamp ring once installed for tamper protection, unlike snap-on/snap-out caps used by others.
- #6 terminal screws with self-lifting captive wire clamps accommodate #22 through two #12 AWG wires (0.5 - 4mm^2) per terminal.
- Operators conveniently mount in a round 1-13/64" (30.5mm) hole that is directly interchangeable with competitors units and eliminates the labor required for notching.

UNIQUE PRODUCT FEATURES

We Put The Metal On The Inside — Where It Counts!

c3controls Emergency Stops contain a solid brass detent mechanism and are the best-engineered, most reliable heavy-duty emergency stop buttons in the world. This rugged design, which comes standard with a polyester clamp ring or optional aluminum clamp ring, ensures reliable operation in emergency applications, providing safe interruption of circuits, and much longer life when compared to any competitor's product. A stainless steel version is also available for corrosive environments (see Section 14 Pages 8 & 9).

Some of Our Popular Configurations:

2-POSITION PUSH-PULL MAINTAINED NON-ILLUMINATED OPERATORS WITH POLYESTER CLAMP RING (TYPE 4X)

	1 CIRCUIT (1 NC)		2 CIRCUIT (1 NO/1 NC)		2 CIRCUIT (2 NC)	
COLOR	CATALOG NUMBER	LIST	CATALOG NUMBER	LIST	CATALOG NUMBER	LIST
Black	PBO-PPMCBK-NC	$ 88.00	PBO-PPMCBK-NO/NC	$101.00	PBO-PPMCBK-NC/NC	$101.00
Green	PBO-PPMCGN-NC	$ 88.00	PBO-PPMCGN-NO/NC	$101.00	PBO-PPMCGN-NC/NC	$101.00
Red	PBO-PPMCRD-NC	$ 88.00	PBO-PPMCRD-NO/NC	$101.00	PBO-PPMCRD-NC/NC	$101.00
Yellow	PBO-PPMCYW-NC	$ 88.00	PBO-PPMCYW-NO/NC	$101.00	PBO-PPMCYW-NC/NC	$101.00

IT'S EASY TO BUILD YOUR OWN PUSH BUTTON

Simply pick the code number from each of the sections below and combine them to build your part number.

Maintained Push Buttons (Non-Illuminated)

2-Position Push-Twist Release

PTR – _____ **TMC** _____ – _____ / _____ – _____
I *II* *III* *IV* *V* *VI* *VII*

Example: To build one of our most popular Push Buttons, the part number would be **PTR + II + TMC + IV + V + VI + VII** or **PTR-TMCGN-NO**

I. OPERATOR TYPE

CODE	DESCRIPTION	LIST
PTR	Push-Twist Release	$65.00

II. CLAMP RING

CODE	DESCRIPTION	LIST
(Blank)	Black Polyester (Type 4X)	—
Y	Yellow Polyester (Type 4X)	$ 4.30
A	Aluminum (Type 4)	$ 4.30

The linear push off twist to release style operator requires a "twist" for the "out" or "on" position and a linear "push" for the "in" or "off" position. The twist mushroom cap is marked with arrows identifying the direction for the twist release.

O = OPEN X = CLOSED

MAINTAINED IN/MAINTAINED OUT

1 CIRCUIT (1 NC)			2 CIRCUIT (1 NO/1 NC)			2 CIRCUIT (2 NC)		
	OUT	IN		OUT	IN		OUT	IN
NC	X	O	NC	X	O	NC	X	O
			NO	O	X	NC	X	O

III. CAP TYPE

CODE	DESCRIPTION	LIST
TMC	Twist Mushroom	$17.00

IV. CAP COLOR

CODE	COLOR
BK	Black
BE	Blue
GN	Green
GY	Grey
RD	Red
WE	White
YW	Yellow

DISCOUNT SCHEDULE **E**

V. CONTACT BLOCK CONFIGURATION (LEFT SIDE)

CODE	DESCRIPTION	LIST
(Blank)	Operator without Contact Blocks	—
NO	1 Normally Open Contact Block	$13.00
NC	1 Normally Closed Contact Block	$13.00
EM	1 Early Make Contact Block	$17.00
DB	1 Delayed Break Contact Block	$17.00
NO-NO	2 Normally Open Contact Blocks	$26.00
NC-NC	2 Normally Closed Contact Blocks	$26.00
NO-NC	1 Normally Open and 1 Normally Closed Contact Blocks	$26.00

VI. CONTACT BLOCK CONFIGURATION (RIGHT SIDE)

(USE CHART V FROM ABOVE)

VII. OPTIONS

CODE	DESCRIPTION	LIST/PC*
(Blank)	None	—
IP20	IP20 Guard	$ 4.00

*NOTE: When choosing the IP20 option, in order to achieve IP20 protection a terminal guard must be assembled on each contact block configuration, increasing the List price $4.00 for each guard.

Some of Our Popular Configurations:

2-POSITION PUSH-TWIST RELEASE MAINTAINED NON-ILLUMINATED OPERATORS WITH POLYESTER CLAMP RING (TYPE 4X)

	1 CIRCUIT (1 NC)		2 CIRCUIT (1 NO/1 NC)		2 CIRCUIT (2 NC)	
COLOR	CATALOG NUMBER	LIST	CATALOG NUMBER	LIST	CATALOG NUMBER	LIST
Black	PTR-TMCBK-NC	$ 95.00	PTR-TMCBK-NO/NC	$108.00	PTR-TMCBK-NC/NC	$108.00
Green	PTR-TMCGN-NC	$ 95.00	PTR-TMCGN-NO/NC	$108.00	PTR-TMCGN-NC/NC	$108.00
Red	PTR-TMCRD-NC	$ 95.00	PTR-TMCRD-NO/NC	$108.00	PTR-TMCRD-NC/NC	$108.00
Yellow	PTR-TMCYW-NC	$ 95.00	PTR-TMCYW-NO/NC	$108.00	PTR-TMCYW-NC/NC	$108.00

Available Cap Colors for 2-Position and 3-Position Maintained Non-Illuminated Push Buttons

Twist Mushroom Cap (1-1/2" (38mm) dia.)

Push-Pull Mushroom Cap (1-1/2" (38mm) dia.)

IT'S EASY TO BUILD YOUR OWN PUSH BUTTON

Simply pick the code number from each of the sections below and combine them to build your part number.

Maintained Push Buttons (Non-Illuminated)

3-Position Push-Pull

	PP			–	–
I	II	III	IV	V	VI

Example: To build one of our most popular Push Buttons, the part number would be I + PP + III + IV + V + VI or PPMIRD-NC-DB

I. CLAMP RING

CODE	DESCRIPTION	LIST
(Blank)	Black Polyester (Type 4X)	—
Y	Yellow Polyester (Type 4X)	$ 4.30
A	Aluminum (Type 4)	$ 4.30

II. OPERATOR TYPE

CODE	DESCRIPTION	LIST
PP	Push-Pull Maintained	$58.00

III. OPERATOR FUNCTION

CODE	DESCRIPTION
MI	Momentary Out, Maintained Center, Maintained In
AC	Momentary Out, Maintained Center, Momentary In

IV. MUSHROOM CAP/COLOR

CODE	COLOR	LIST
BK	Black	$17.00
BE	Blue	$17.00
GN	Green	$17.00
GY	Grey	$17.00
RD	Red	$17.00
WE	White	$17.00
YW	Yellow	$17.00

V. CONTACT BLOCK CONFIGURATION*

CODE	DESCRIPTION	LIST
(Blank)	Operator without Contact Blocks	—
NC-DB	1 Normally Closed and 1 Delayed Break Contact Blocks	$30.00
NO-NC	1 Normally Open and 1 Normally Closed Contact Blocks	$26.00

*NOTE: Contact blocks mount on one side only.

VI. OPTIONS

CODE	DESCRIPTION	LIST/PC*
(Blank)	None	—
IP20	IP20 Guard	$ 4.00

*NOTE: When choosing the IP20 option, in order to achieve IP20 protection a terminal guard must be assembled on each contact block configuration, increasing the List price $4.00 for each guard.

The 3-Position Push-Pull device is available in two basic styles. One version features the "out" position as momentary, the "center" position as maintained, and the "in" position as maintained. The other version features the "center" position as maintained while the "out" and "in" positions are momentary.

O = OPEN X = CLOSED

MOMENTARY OUT, MAINTAINED CENTER, MAINTAINED IN				MOMENTARY OUT, MAINTAINED CENTER, MOMENTARY IN			
	OUT	CENTER	IN		OUT	CENTER	IN
NC	X	O	O	NC	X	O	O
DB	X	X	O	DB	X	X	O
NO	O	O	X	NO	O	O	X
NC	X	O	O	NC	X	O	O

DISCOUNT SCHEDULE **E**

SNAP-ON IP20 TERMINAL GUARDS

protect against accidental contact with live parts.
See page 32.

Some of Our Popular Configurations:

3-POSITION PUSH-PULL MAINTAINED NON-ILLUMINATED OPERATORS WITH POLYESTER CLAMP RING (TYPE 4X)

	MOMENTARY OUT, MAINTAINED CENTER, MAINTAINED IN		MOMENTARY OUT, MAINTAINED CENTER MOMENTARY IN	
COLOR	CATALOG NUMBER	LIST	CATALOG NUMBER	LIST
Black	PPMIBK-NC-DB	$105.00	PPACBK-NC-DB	$105.00
Green	PPMIGN-NC-DB	$105.00	PPACGN-NC-DB	$105.00
Red	PPMIRD-NC-DB	$105.00	PPACRD-NC-DB	$105.00
Yellow	PPMIYW-NC-DB	$105.00	PPACYW-NC-DB	$105.00

See bottom of page 10 for Cap Color options.

IT'S EASY TO BUILD YOUR OWN PUSH BUTTON

Simply pick the code number from each of the sections below and combine them to build your part number.

Momentary Push Buttons (Illuminated)*

I	II	III	–	IV	V	VI	–	VII	–	VIII

Example: To build one of our most popular Push Buttons, the part number would be I + II + III + IV + V + VI + VII + VIII or FVLUI20-IPBCGN-NO-IP20

*NOTE: Our momentary illuminated push buttons must be ordered as an assembled part. Contact blocks may be ordered separately.

I. ILLUMINATED PUSH BUTTON OPERATOR

CODE	DESCRIPTION	LIST
FVLU	Full Voltage	$46.00
RLU	Resistor	$57.00
RTLU	Dual Input Remote Test	$62.00

II. VOLTAGE BASED ON OPERATOR TYPE

CODE	DESCRIPTION
	FULL VOLTAGE
6	6V AC/DC‡
12	12V AC/DC
24	24V AC/DC
120	120V AC/DC
	RESISTOR
120	120V AC/DC
240	240V AC/DC
480	480V AC/DC (LED only)
	DUAL INPUT REMOTE TEST
6	6V AC/DC‡
12	12V AC/DC
24	24V AC/DC
120	120V AC/DC

NOTE: Products marked with ‡ are not available for same-day shipping. Contact our Customer First Team for lead times and minimum order quantities.

See page 33 for Lamp Replacement Chart and page 34 for Technical Data.

III. LAMP TYPE/COLOR

CODE	COLOR	LIST
	LED	
LA	Amber	$18.00
LB	Blue	$18.00
LG	Green	$18.00
LR	Red	$18.00
LW	White	$18.00
	INCANDESCENT	
(Blank)	Clear NOTE: Incandescent bulbs are not an option for RLU480.	—
NL	**No Lamp**	– $ 1.80

IV. CLAMP RING

CODE	DESCRIPTION	LIST
(Blank)	Black Polyester (Type 4X)	—
A	Aluminum (Type 4)	$ 4.30

V. LENS TYPE

CODE	DESCRIPTION	LIST
IPBC	Illuminated Push Button Lens	$24.00
IPBCM	Illuminated Push Button Mushroom Lens	$36.00
GIPBC	Guarded Illuminated Push Button Lens*	$36.00
SIPBCM	Shrouded Illuminated Push Button Mushroom Lens*	$48.00

*NOTE: Aluminum clamp rings are not an option for GIPBC or SIPBCM.

VI. LENS COLOR

CODE	COLOR
AR	Amber
BE	Blue
CR	Clear
GN	Green
RD	Red
WE	White
YW	Yellow

VII. CONTACT BLOCK CONFIGURATION*

CODE	DESCRIPTION	LIST
(Blank)	Operator without Contact Blocks	—
NO	1 Normally Open Contact Block	$13.00
NC	1 Normally Closed Contact Block	$13.00
EM	1 Early Make Contact Block	$17.00
DB	1 Delayed Break Contact Block	$17.00
NO-NO	2 Normally Open Contact Blocks	$26.00
NC-NC	2 Normally Closed Contact Blocks	$26.00
NO-NC	1 Normally Open and 1 Normally Closed Contact Blocks	$26.00

*NOTE: Contact blocks mount on one side only.

VIII. OPTIONS

CODE	DESCRIPTION	LIST/PC*
(Blank)	None	—
IP20	IP20 Guard	$ 4.00

*NOTE: When choosing the IP20 option, in order to achieve IP20 protection a terminal guard must be assembled on the light module and each contact block configuration, increasing the List price $4.00 for each guard.

IP20 terminal guards are not available for RTLU.

DISCOUNT SCHEDULE E

Mix and Match Any Color and Momentary Illuminated Push Button Lens

Push Button Lens — Guarded Push Button Lens — Mushroom Lens (1-1/2" (38mm) dia.) — Shrouded Mushroom Lens (1-1/2" (38mm) dia.)

30mm Momentary Illuminated Push Buttons

c3controls goes the extra step to make sure that our products outlast the competition. Our 30mm Momentary Illuminated Push Buttons are durable and flexible for a variety of uses. All c3controls 30mm operators are UL Listed and are rated Type 4/4X as standard for watertight and corrosion resistance. In addition, operators are also listed for Type 1, 2, 3, 3R, 12 and 13, and meet global standards requirements.

Product features include:

- Polyester construction for superior corrosion resistance, moisture rejection and electrical insulation.
- Polyester or polished aluminum clamp rings.
- Full voltage lights incorporate a unique insulated socket design to minimize accidental contact during lamp change.
- All lights use miniature bayonet base lamps to provide reliable lamp secureness.
- Available with Incandescent or our LED lamps with leakage protection.
- #6 terminal screws with self-lifting captive wire clamps accommodate #22 through two #12 AWG wires (0.5 - 4mm^2) per terminal.
- Operators conveniently mount in a round 1-13/64" (30.5mm) hole that is directly interchangeable with competitors units and eliminates the labor required for notching.

UNIQUE PRODUCT FEATURES

1. Our revolutionary U-Cup seal is infused with a Teflon coating to eliminate cracking when exposed to harsh conditions such as heat, dryness and sunlight. The U-Cup seal rides easily along the stroker and keeps water, oils, dust and other corrosive particles in the air away from the contact blocks. This U-cup seal also acts like a squeegee and forms a permanent watertight seal that meets Type 4/4X standards.
2. All frictional parts are molded with an internal self lubricant to provide outstanding wear without troublesome greases used by others.
3. Our rugged Lexan™ caps can resist high impact for reliable performance in most environments even in high ambient temperatures.

Some of Our Popular Configurations:

MOMENTARY ILLUMINATED PUSH BUTTON OPERATORS WITH POLYESTER CLAMP RING (TYPE 4X)

		PUSH BUTTON LENS		MUSHROOM LENS	
	LENS COLOR	CATALOG NUMBER	LIST	CATALOG NUMBER	LIST
Full Voltage	Amber	FVLU120-IPBCAR-NO-NC	$ 96.00	FVLU120-IPBCMAR-NO-NC	$108.00
	Green	FVLU120-IPBCGN-NO	$ 83.00	FVLU120-IPBCMGN-NO	$ 95.00
	Red	FVLU120-IPBCRD-NC	$ 83.00	FVLU120-IPBCMRD-NC	$ 95.00
Resistor	Amber	RLU120-IPBCAR-NO-NC	$107.00	RLU120-IPBCMAR-NO-NC	$119.00
	Green	RLU120-IPBCGN-NO	$ 94.00	RLU120-IPBCMGN-NO	$106.00
	Red	RLU120-IPBCRD-NC	$ 94.00	RLU120-IPBCMRD-NC	$106.00
LED	Amber	RLU240LA-IPBCAR-NO-NC	$125.00	RLU240LA-IPBCMAR-NO-NC	$137.00
	Green	FVLU120LG-IPBCGN-NO	$101.00	FVLU120LG-IPBCMGN-NO	$113.00
	Red	FVLU120LR-IPBCRD-NC	$101.00	FVLU120LR-IPBCMRD-NC	$113.00

DUAL INPUT REMOTE TEST

Our unique Dual Input Remote light unit can be used as an illuminated push button while also permitting the testing of a number of lights from a single push button. A diode circuit isolates the test supply from the normal supply. The schematic shown represents a typical dual input application.

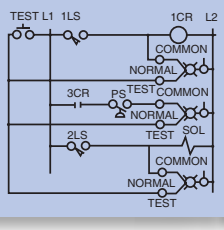

IT'S EASY TO BUILD YOUR OWN PUSH BUTTON

Simply pick the code number from each of the sections below and combine them to build your part number.

Maintained Push Buttons (Illuminated)
2-Position Push-Pull

	PPM			–		IMC		–		–
I	II	III	IV		V	VI	VII		VIII	IX

Example: To build one of our most popular Push Buttons, the part number would be I + PPM + III + IV + V + IMC + VII + VIII + IX or FVPPM120-IMCGN-NO

I. ILLUMINATED PUSH BUTTON OPERATOR

CODE	DESCRIPTION
FV	Full Voltage
RL	Resistor

II. OPERATOR TYPE

CODE	DESCRIPTION	LIST
PPM	Push-Pull Maintained	$79.00

III. VOLTAGE BASED ON OPERATOR TYPE

CODE	DESCRIPTION
	FULL VOLTAGE
6	6V AC/DC‡
12	12V AC/DC
24	24V AC/DC
120	120V AC/DC
	RESISTOR
120	120V AC/DC
240	240V AC/DC
480	480V AC/DC (LED only)

NOTE: Products marked with ‡ are not available for same-day shipping. Contact our Customer First Team for lead times and minimum order quantities.

The 2-Position Push-Pull is maintained in both the push and pull positions. The primary application is "push" to "stop" and "pull" to "start".

DISCOUNT SCHEDULE E

IV. LAMP TYPE/COLOR

CODE	COLOR	LIST
	LED	
LA	Amber	$18.00
LB	Blue	$18.00
LG	Green	$18.00
LR	Red	$18.00
LW	White	$18.00
	INCANDESCENT	
(Blank)	Clear NOTE: Incandescent bulbs are not an option for RLPPM480.	—
NL	**No Lamp**	– $ 1.80

V. CLAMP RING

CODE	DESCRIPTION	LIST
(Blank)	Black Polyester (Type 4X)	—
A	Aluminum (Type 4)	$ 4.30

VI. LENS TYPE

CODE	DESCRIPTION	LIST
IMC	Illuminated Mushroom Lens	$36.00

See page 33 for Lamp Replacement Chart and page 34 for Technical Data.

See page 15 for Circuit Diagram Chart.

VII. LENS COLOR

CODE	COLOR
AR	Amber
BE	Blue
CR	Clear
GN	Green
RD	Red
WE	White

VIII. CONTACT BLOCK CONFIGURATION*

CODE	DESCRIPTION	LIST
(Blank)	Operator without Contact Blocks	—
NO	1 Normally Open Contact Block	$13.00
NC	1 Normally Closed Contact Block	$13.00
EM	1 Early Make Contact Block	$17.00
DB	1 Delayed Break Contact Block	$17.00
NO-NO	2 Normally Open Contact Blocks	$26.00
NC-NC	2 Normally Closed Contact Blocks	$26.00
NO-NC	1 Normally Open and 1 Normally Closed Contact Blocks	$26.00

*NOTE: Contact blocks mount on one side only.

IX. OPTIONS

CODE	DESCRIPTION	LIST/PC*
(Blank)	None	—
IP20	IP20 Guard	$ 4.00

*NOTE: When choosing the IP20 option, in order to achieve IP20 protection a terminal guard must be assembled on each contact block configuration, increasing the List price $4.00 for each guard.

Available Lens Colors for 2-Position and 3-Position Maintained Illuminated Push Buttons

(1-1/2" (38mm) dia.)

30mm Maintained Illuminated Push Buttons

c3controls goes the extra step to make sure that our products outlast the competition. Our 30mm Maintained Illuminated Push Buttons are durable and flexible for a variety of uses. All c3controls 30mm operators are UL Listed and are rated Type 4/4X as standard for watertight and corrosion resistance. In addition, operators are also listed for Type 1, 2, 3, 3R, 12 and 13, and meet global standards requirements.

Product features include:

- Polyester construction for superior corrosion resistance, moisture rejection and electrical insulation.
- Polyester or polished aluminum clamp rings with coarse 16 pitch threads that easily thread on and won't cross thread or strip.
- Full voltage lights incorporate a unique insulated socket design to minimize accidental contact during lamp change.
- All lights use miniature bayonet base lamps to provide reliable lamp secureness.
- Available with Incandescent or our LED lamps with leakage protection.
- #6 terminal screws with self-lifting captive wire clamps accommodate #22 through two #12 AWG wires (0.5 - 4mm^2) per terminal.
- Operators conveniently mount in a round 1-13/64" (30.5mm) hole that is directly interchangeable with competitors units and eliminates the labor required for notching.

UNIQUE PRODUCT FEATURES

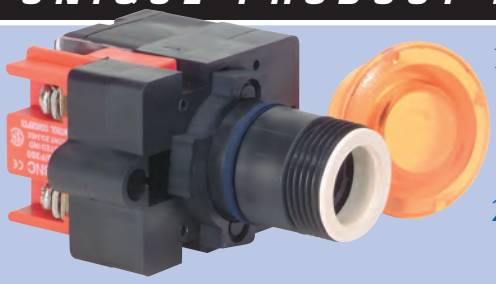

1. Our seal is infused with a coating to eliminate cracking when exposed to harsh conditions such as heat, dryness and sunlight. This seal also acts as a light reflector because it is white which increases light output and improves visibility from all angles.
2. All frictional parts are molded with an internal self lubricant to provide outstanding wear without troublesome greases used by others.
3. Our rugged Lexan™ caps can resist high impact for reliable performance in most environments even in high ambient temperatures.

2-Position Push-Pull Maintained Illuminated Operators Circuit Diagram Chart

O = OPEN X = CLOSED

MAINTAINED IN/MAINTAINED OUT								
1 CIRCUIT (1 NC)			2 CIRCUIT (1 NO/1 NC)			2 CIRCUIT (2 NC)		
	OUT	IN		OUT	IN		OUT	IN
NC	X	O	NC	X	O	NC	X	O
			NO	O	X	NC	X	O

3-Position Push-Pull Maintained Illuminated Operators Circuit Diagram Chart

O = OPEN X = CLOSED

MOMENTARY OUT, MAINTAINED CENTER, MAINTAINED IN				MOMENTARY OUT, MAINTAINED CENTER, MOMENTARY IN			
	OUT	CENTER	IN		OUT	CENTER	IN
NC	X	O	O	NC	X	O	O
DB	X	X	O	DB	X	X	O
NO	O	O	X	NO	O	O	X
NC	X	O	O	NC	X	O	O

Some of Our Popular Configurations:

2-POSITION PUSH-PULL MAINTAINED ILLUMINATED OPERATORS WITH POLYESTER CLAMP RING (TYPE 4X)						
	1 CIRCUIT (1 NC)		2 CIRCUIT (1 NO/1 NC)		2 CIRCUIT (2 NC)	
TYPE	CATALOG NUMBER	LIST	CATALOG NUMBER	LIST	CATALOG NUMBER	LIST
Full Voltage	FVPPM120-IMCRD-NC	$128.00	FVPPM120-IMCRD-NO-NC	$141.00	FVPPM120-IMCRD-NC-NC	$141.00
Resistor	RLPPM120-IMCRD-NC	$128.00	RLPPM120-IMCRD-NO-NC	$141.00	RLPPM120-IMCRD-NC-NC	$141.00

IT'S EASY TO BUILD YOUR OWN PUSH BUTTON

Simply pick the code number from each of the sections below and combine them to build your part number.

Maintained 3-Position Push-Pull Push Buttons (Illuminated)

I	II	III	IV	– V	IMC VI	VII	– VIII	– IX

Example: To build one of our most popular Push Buttons, the part number would be I + II + III + IV + V + IMC + VII + VIII + IX or FVMI120-IMCRD-NC-DB

I. ILLUMINATED PUSH BUTTON OPERATOR

CODE	DESCRIPTION
FV	Full Voltage
RL	Resistor

II. OPERATOR FUNCTION

CODE	DESCRIPTION	LIST
MI	Momentary Out, Maintained Center, Maintained In	$ 79.00
AC	Momentary Out, Maintained Center, Momentary In	$ 79.00

III. VOLTAGE BASED ON OPERATOR TYPE

CODE	DESCRIPTION
	FULL VOLTAGE
6	6V AC/DC‡
12	12V AC/DC
24	24V AC/DC
120	120V AC/DC
	RESISTOR
120	120V AC/DC
240	240V AC/DC
480	480V AC/DC (LED only)

NOTE: Products marked with ‡ are not available for same-day shipping. Contact our Customer First Team for lead times and minimum order quantities.

IV. LAMP TYPE/COLOR

CODE	COLOR	LIST
	LED	
LA	Amber	$ 18.00
LB	Blue	$ 18.00
LG	Green	$ 18.00
LR	Red	$ 18.00
LW	White	$ 18.00
	INCANDESCENT	
(Blank)	Clear NOTE: Incandescent bulbs are not an option for RL480.	—
NL	**No Lamp**	– $ 1.80

V. CLAMP RING

CODE	DESCRIPTION	LIST
(Blank)	Black Polyester (Type 4X)	—
A	Aluminum (Type 4)	$ 4.30

VI. LENS TYPE

CODE	DESCRIPTION	LIST
IMC	Illuminated Mushroom Lens	$ 36.00

VII. LENS COLOR

CODE	COLOR
AR	Amber
BE	Blue
CR	Clear
GN	Green
RD	Red
WE	White

VIII. CONTACT BLOCK CONFIGURATION*

CODE	DESCRIPTION	LIST
(Blank)	Operator without Contact Blocks	—
NC-DB	1 Normally Closed and 1 Delayed Break Contact Blocks	$ 30.00
NO-NC	1 Normally Open and 1 Normally Closed Contact Blocks	$ 26.00

*NOTE: Contact blocks mount on one side only.

IX. OPTIONS

CODE	DESCRIPTION	LIST/PC*
(Blank)	None	—
IP20	IP20 Guard	$ 4.00

*NOTE: When choosing the IP20 option, in order to achieve IP20 protection a terminal guard must be assembled on each contact block configuration, increasing the List price $4.00 for each guard.

See page 33 for Lamp Replacement Chart and page 34 for Technical Data.

See page 15 for Circuit Diagram Chart.

The 3-Position Push-Pull device is available in two basic styles. One version features the "out" position as momentary, the "center" as maintained, and the "in" position as maintained. The other version features the "center" position as maintained while the "out" and "in" positions are momentary.

DISCOUNT SCHEDULE E

Some of Our Popular Configurations:

See bottom of page 14 for Lens Color options.

3-POSITION PUSH-PULL MAINTAINED OPERATORS WITH POLYESTER CLAMP RING (TYPE 4X)

	MOMENTARY OUT, MAINTAINED CENTER, MAINTAINED IN		MOMENTARY OUT, MAINTAINED CENTER, MOMENTARY IN	
TYPE	CATALOG NUMBER	LIST	CATALOG NUMBER	LIST
Full Voltage	FVMI120-IMCRD-NC-DB	$145.00	FVAC120-IMCRD-NC-DB	$145.00
Resistor	RLMI120-IMCRD-NC-DB	$145.00	RLAC120-IMCRD-NC-DB	$145.00

RESET PUSH BUTTON

Our unique Reset Push Button mounts in a standard 1-13/64" (30.5mm) hole and accepts either 20 hex head bolts or 20 thread rod to provide adjustable extension and save on all rod cutting and fitting labor. Universal styles include two bolts to cover 1" to 3" (25.4mm to 76.2mm) space from cover to overload reset rod. It is rated Type 4/4X as standard.

CODE	DESCRIPTION	LIST
RPB	Reset Push Button	$19.00
RPB-B	RPB with Bolts (1/4-20 x 1-3/4" & 3")	$22.00
RPB-W	RPB with Washers	$22.00
RPB-BW	RPB with Bolt & Washer Set	$24.00
RPB BOLTS	2 Bolts (1/4-20 x 1-3/4" & 3")	$ 2.00
RPB WASHERS	Washer Set	$ 2.00

Special bolt lengths available — consult factory (not available for guaranteed same day shipping).

WOBBLE STICK

Designed primarily for use with pendant stations, the wobble stick may be mounted in oil tight or watertight stations. The unit has spring return action to center and may be operated from any angle. It is rated Type 4/4X as standard. NOTE: Our Wobble Stick is a linear device similar to a push button. It is not a joystick or directional.

CODE	DESCRIPTION	LIST
WITH BLACK POLYESTER (TYPE 4X) CLAMP RING		
WS-NO/NC	with 1 NO and 1 NC	$ 78.00
WS-NO-NO/NC-NC	with 2 NO and 2 NC	$108.00
WITH ALUMINUM (TYPE 4) CLAMP RING		
AWS-NO/NC	with 1 NO and 1 NC	$ 83.00
AWS-NO-NO/NC-NC	with 2 NO and 2 NC	$113.00

CABLE PULL OPERATORS

Our unique low-energy cable pull operators are available in four styles and are UL Listed for Type 1, 2, 3, 3R, 4/4X, 12 and 13 requirements. Our cable pull operators are reverse spring biased to hold contact blocks in the operated position until a force (varies by operator) is applied to the included eyebolt. Contact operation is opposite of normal (i.e., CBNO is held closed and opens only when the eyebolt is pulled). Units are available with or without contact blocks and can be supplied in Type 4X surface mounting enclosures as a custom order (not available for guaranteed same day shipping). See Section 21 for a complete selection of our control stations.

MOMENTARY CABLE PULL OPERATOR

Constructed to withstand corrosive environments. It holds contact blocks in the operated position until a 4 - 6 pound force is applied to the included eyebolt.*

CODE	DESCRIPTION	LIST
WITH BLACK POLYESTER (TYPE 4X) CLAMP RING		
CPO	Operator Only	$108.00
CPO-NO	with CBNO held closed	$123.00
CPO-NC	with CBNC held open	$123.00
WITH ALUMINUM (TYPE 4) CLAMP RING		
ACPO	Operator Only	$113.00
ACPO-NO	with CBNO held closed	$128.00
ACPO-NC	with CBNC held open	$128.00

BOOTED MOMENTARY CABLE PULL OPERATOR

Provides protection in the most severe environments, such as when sleet, freeze and thaw conditions are prevalent. It holds contact blocks in the operated position until a 4 - 6 pound force is applied to the included eyebolt.*

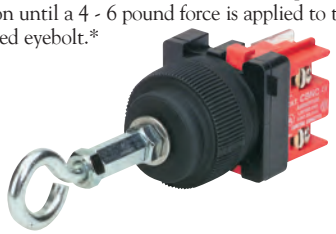

CODE	DESCRIPTION	LIST
CPORB4	Operator only with Type 4X Boot	$147.00

NOTE: Not available with aluminum clamp ring.

HEAVY-DUTY MOMENTARY CABLE PULL OPERATOR

Constructed of solid brass to provide the most reliable operation. It holds contact blocks in the operated position until a 13 pound force is applied to the included eye-

CODE	DESCRIPTION	LIST
WITH BLACK POLYESTER (TYPE 4X) CLAMP RING		
HDCPO	Operator Only	$123.00
HDCPO-NO	with CBNO held closed	$137.00
HDCPO-NC	with CBNC held open	$137.00
WITH ALUMINUM (TYPE 4) CLAMP RING		
AHDCPO	Operator Only	$127.00
AHDCPO-NO	with CBNO held closed	$142.00
AHDCPO-NC	with CBNC held open	$142.00

PUSH-PULL MAINTAINED CABLE PULL OPERATOR

Operating head is provided with a latch detent mechanism to hold the operator in the pulled or "out" position when operated. It holds contact blocks in the operated position until a 4 - 6 pound force is applied to the included eyebolt. Requires a manual reset after actuation. Also available in solid stainless steel as a custom order (not available for guaranteed same day shipping)—consult the factory.*

CODE	DESCRIPTION	LIST
WITH BLACK POLYESTER (TYPE 4X) CLAMP RING		
PPCPO	Operator Only	$123.00
PPCPO-NO	with CBNO held closed	$137.00
PPCPO-NC	with CBNC held open	$137.00
WITH ALUMINUM (TYPE 4) CLAMP RING		
APPCPO	Operator Only	$127.00
APPCPO-NO	with CBNO held closed	$142.00
APPCPO-NC	with CBNC held open	$142.00

*NOTE: The c3controls Cable Pull Switch is a "pull operated" switch designed to be operated by pulling on a rope or cable. It is not designed to the Machine Directives for Emergency Devices for Safeguarding Machinery. It does not offer direct drive, positive break/positive transfer contacts. It is a spring operated momentary device that operates "slow make/slow break" normally open and normally closed contact blocks. Pulling the eyebolt collapses an internal spring, which allows contact blocks mounted on the rear of the operator to open or close and actuate the intended circuit. Releasing the eyebolt allows the internal spring to return and depress the contact blocks to their original state. The device is designed to provide in excess of 1 million mechanical operations and is frequently applied in overhead door applications.

DISCOUNT SCHEDULE E

IT'S EASY TO BUILD YOUR OWN POTENTIOMETER

Simply pick the code number from each of the sections below and combine them to build your part number.

Potentiometer Operators

POTO _____ _____ – _____
I *II* *III* *IV*

Example: To build one of our most popular Potentiometer Operators, the part number would be **POTO + II + III + IV** or **POTO5K-TBW**

I. OPERATOR TYPE

CODE	DESCRIPTION	LIST
POTO	Potentiometer Operator	$58.00

II. CLAMP RING

CODE	DESCRIPTION	LIST
(Blank)	Black Polyester (Type 4X)	—
A	Aluminum (Type 4)	$ 4.30

III. RESISTANCE

CODE	DESCRIPTION	LIST
(Blank)	Operator only	—
1K	1k Potentiometer	$22.00
2.5K	2.5k Potentiometer	$22.00
5K	5k Potentiometer	$22.00
10K	10k Potentiometer	$22.00

Special order values available—consult factory (not available for guaranteed same day shipping).

IV. TERMINAL BLOCK

CODE	DESCRIPTION	LIST
(Blank)	Operator only	—
TBW	Terminal Block installed and wired	$16.00

Terminal block kit may be ordered separately (part number TBK, List $9.60) or installed and wired at the factory to the potentiometer operator.

DISCOUNT SCHEDULE **E**

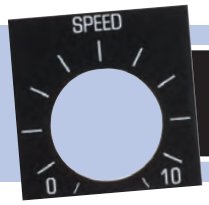

***LEGEND PLATES FOR POTENTIOMETER OPERATORS** are available for same day shipping.*
See pages 30 & 31 for complete selection.

WIRING DIAGRAM

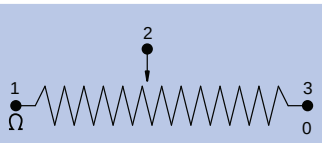

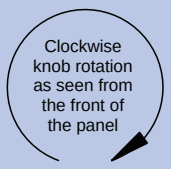

Measuring Between Terminals:

1 & 2 Decreasing Resistance (↓ Ω)

2 & 3 Increasing Resistance (↑ Ω)

2 is the common

30mm Potentiometer Operators

Our single-turn Potentiometer Operators utilize standard 2 watt potentiometers with 1/4" (6.4mm) bushing and 7/8" (22.5mm) long slotted shafts. A 5/64" allen wrench is required for installation. All c3controls 30mm operators are UL Listed and are rated Type 4/4X as standard for watertight and corrosion resistance. In addition, operators are also listed for Type 1, 2, 3, 3R, 12 and 13, and meet global standards requirements. CSA File # LR 47446-9.

Product features include:

- Polyester construction for superior corrosion resistance, moisture rejection and electrical insulation.
- Polyester or polished aluminum clamp rings.
- Single-turn standard 2 watt potentiometer.
- #6 terminal screws with self-lifting captive wire clamps accommodate #22 through two #12 AWG wires (0.5 - 4mm^2) per terminal.
- Operators conveniently mount in a round 1-13/64" (30.5mm) hole that is directly interchangeable with competitors units.

UNIQUE PRODUCT FEATURES

1. Our revolutionary U-Cup seal is infused with a Teflon coating to eliminate cracking when exposed to harsh conditions such as heat, dryness and sunlight.
2. All frictional parts are molded with an internal self-lubricant to provide outstanding wear without troublesome greases used by others that attracts dust and other particles in the area.
3. Three point terminal block and hardware.

IT'S EASY TO BUILD YOUR OWN PILOT LIGHT

Simply pick the code number from each of the sections below and combine them to build your part number.

Pilot Lights

I	II	III	–	IV	PLL V	VI	–	VII

Example: To build one of our most popular Pilot Lights, the part number would be I + II + III + IV + PLL + VI + VII or FVLU120LG-PLLGN

I. PILOT LIGHT OPERATOR

CODE	DESCRIPTION	LIST
FVLU	Full Voltage	$46.00
RLU	Resistor	$57.00
RTLU	Dual Input Remote Test	$62.00

II. VOLTAGE BASED ON OPERATOR TYPE

CODE	DESCRIPTION
	FULL VOLTAGE
6	6V AC/DC‡
12	12V AC/DC
24	24V AC/DC
120	120V AC/DC
	RESISTOR
120	120V AC/DC
240	240V AC/DC
480	480V AC/DC (LED only)
	DUAL INPUT REMOTE TEST
6	6V AC/DC‡
12	12V AC/DC
24	24V AC/DC
120	120V AC/DC
240	240V AC/DC

NOTE: Products marked with ‡ are not available for same-day shipping. Contact our Customer First Team for lead times and minimum order quantities.

III. LAMP TYPE/COLOR

CODE	COLOR	LIST
	LED	
LA	Amber	$18.00
LB	Blue	$18.00
LG	Green	$18.00
LR	Red	$18.00
LW	White	$18.00
	INCANDESCENT	
(Blank)	Clear NOTE: Incandescent bulbs are not an option for RLU480.	—
NL	**No Lamp**	– $ 1.80

IV. CLAMP RING

CODE	DESCRIPTION	LIST
(Blank)	Black Polyester (Type 4X)	—
A	Aluminum (Type 4)	$ 4.30

V. LENS TYPE

CODE	DESCRIPTION	LIST
PLL	Pilot Light Lens	$11.00

VI. LENS COLOR

CODE	COLOR
AR	Amber
BE	Blue
CR	Clear
GN	Green
RD	Red
WE	White

VII. OPTIONS

CODE	DESCRIPTION	LIST
(Blank)	None	—
IP20	IP20 Guard	$ 4.00

NOTE: IP20 terminal guards are not available for RTLU.

SEE PAGE 33 FOR LAMP REPLACEMENT CHART AND PAGE 34 FOR TECHNICAL DATA.

DISCOUNT SCHEDULE E

DUAL INPUT REMOTE TEST

Our unique Dual Input Remote light unit can be used as a pilot light while also permitting the testing of a number of lights from a single push button. A diode circuit isolates the test supply from the normal supply. The schematic shown represents a typical dual input application.

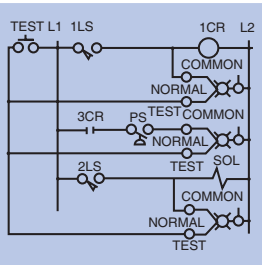

AVAILABLE LENS COLORS FOR PILOT LIGHTS

30mm Pilot Lights

Our 30mm Pilot Lights, when utilized with our LED lamps provide leakage protection, long-lasting life and high quality with tremendous resistance to shock and vibration. Our reflection technology and state-of-the-art LED lamps improve visibility from all angles. c3controls LED lamps last 100,000 hours — *that's 11.4 years!* Combine these LEDs with our full voltage or resistor packages for optimum durability. All c3controls 30mm operators are UL Listed and are rated Type 4/4X as standard for watertight and corrosion resistance. In addition, operators are also listed for Type 1, 2, 3, 3R, 12 and 13, and meet global standards requirements.

Product features include:

- Polyester construction for superior corrosion resistance, moisture rejection and electrical insulation.
- Full voltage lights incorporate a unique insulated socket design to minimize accidental contact during lamp change.
- All lights use miniature bayonet base lamps to provide reliable lamp secureness.
- Available with Incandescent or our LED lamps with leakage protection.
- #6 terminal screws with self-lifting captive wire clamps accommodate #22 through two #12 AWG wires (0.5 - 4mm^2) per terminal.
- Operators conveniently mount in a round 1-13/64" (30.5mm) hole that is directly interchangeable with competitors units and eliminates the labor required for notching.

UNIQUE PRODUCT FEATURES

1. Compact, thin design is also vibration resistant.
2. Our seal is infused with a coating to eliminate cracking when exposed to harsh conditions such as heat, dryness and sunlight. This seal also acts as a light reflector because it is white which increases light output and improves visibility from all angles.
3. Our rugged Lexan™ lenses provide better visibility and can resist high impact for reliable performance in most environments, even in high ambient temperatures.
4. We utilize premium 130V incandescent and LED lamps for improved, long-lasting life.

Some of Our Popular Configurations:

PILOT LIGHTS WITH POLYESTER CLAMP RING (TYPE 4X)

CATALOG NUMBER	DESCRIPTION	LIST
FVLU120LG-PLLGN	Full Voltage 120V Green LED w/Green Lens	$75.00
FVLU120LR-PLLRD	Full Voltage 120V Red LED w/Red Lens	$75.00
FVLU120LA-PLLAR	Full Voltage 120V Amber LED w/Amber Lens	$75.00

IT'S EASY TO BUILD YOUR OWN PILOT LIGHT

Simply pick the code number from each of the sections below and combine them to build your part number.

Push-To-Test Pilot Lights*

	PTT			–				–	
I	II	III	IV		V	VI	VII		VIII

Example: To build one of our most popular Pilot Lights, the part number would be I + PTT + III + IV + V + VI + VII + VIII or FVPTT120-IPBCRD

*NOTE: Our push-to-test pilot lights must be ordered as an assembled part.

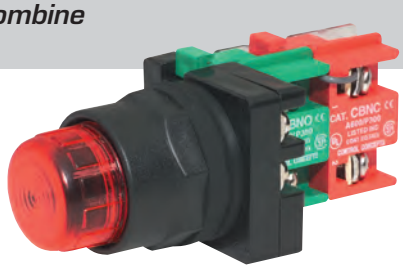

I. PUSH-TO-TEST OPERATOR

CODE	DESCRIPTION	LIST
FV	Full Voltage	$46.00
RL	Resistor	$57.00

II. OPERATOR TYPE

CODE	DESCRIPTION	LIST
PTT	Push-To-Test	$32.00

III. VOLTAGE BASED ON OPERATOR

CODE	DESCRIPTION
	FULL VOLTAGE
6	6V AC/DC‡
12	12V AC/DC
24	24V AC/DC
120	120V AC/DC
	RESISTOR
120	120V AC/DC
240	240V AC/DC
480	480V AC/DC (LED only)

NOTE: Products marked with ‡ are not available for same-day shipping. Contact our Customer First Team for lead times and minimum order quantities.

IV. LAMP TYPE/COLOR

CODE	COLOR	LIST
	LED	
LA	Amber	$18.00
LB	Blue	$18.00
LG	Green	$18.00
LR	Red	$18.00
LW	White	$18.00
	INCANDESCENT	
(Blank)	Clear NOTE: Incandescent bulbs are not an option for RLPTT480.	—
NL	**No Lamp**	– $ 1.80

V. CLAMP RING

CODE	DESCRIPTION	LIST
(Blank)	Black Polyester (Type 4X)	—
A	Aluminum (Type 4)	$ 4.30

SEE PAGE 33 FOR LAMP REPLACEMENT CHART AND PAGE 34 FOR TECHNICAL DATA.

VI. LENS TYPE

CODE	DESCRIPTION	LIST
IPBC	Illuminated Push Button Lens	$24.00
IPBCM	Illuminated Push Button Mushroom Lens	$36.00
GIPBC	Guarded Illuminated Push Button Lens*	$36.00
SIPBCM	Shrouded Illuminated Push Button Mushroom Lens*	$48.00

*NOTE: Aluminum clamp rings are not an option for GIPBC or SIPBCM.

VII. LENS COLOR

CODE	COLOR
AR	Amber
BE	Blue
CR	Clear
GN	Green
RD	Red
WE	White
YW	Yellow

VIII. OPTIONS

CODE	DESCRIPTION	LIST
(Blank)	None	—
IP20	(3) IP20 Guards*	$12.00

*NOTE: Includes guards for light module and both contact blocks.

Push-To-Test Pilot Lights combine an illuminated push button with normally open and normally closed contact blocks factory wired for three-point wiring in standard push-to-test circuits.

DISCOUNT SCHEDULE E

AVAILABLE LENS COLORS FOR PUSH-TO-TEST PILOT LIGHTS

Push Button Lens — Guarded Push Button Lens — Mushroom Lens (1-1/2" (38mm) dia.) — Shrouded Mushroom Lens (1-1/2" (38mm) dia.)

30mm Push-To-Test Pilot Lights

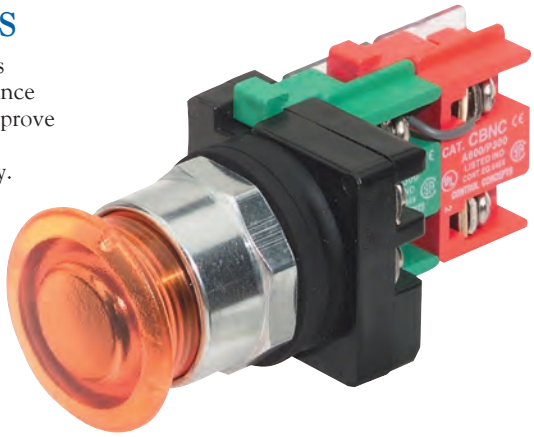

Our 30mm Illuminated Push-To-Test Pilot Lights, when utilized with our LED lamps provide leakage protection, long-lasting life and high quality with tremendous resistance to shock and vibration. Our reflection technology and state-of-the-art LED lamps improve visibility from all angles. c3controls LED lamps last 100,000 hours — *that's 11.4 years!* Combine these LEDs with our full voltage or resistor packages for optimum durability. All c3controls 30mm operators are UL Listed and are rated Type 4/4X as standard for watertight and corrosion resistance. In addition, operators are also listed for Type 1, 2, 3, 3R, 12 and 13, and meet global standards requirements.

Product features include:

- Polyester construction for superior corrosion resistance, moisture rejection and electrical insulation.
- Full voltage lights incorporate a unique insulated socket design to minimize accidental contact during lamp change.
- All lights use miniature bayonet base lamps to provide reliable lamp secureness.
- Available with Incandescent or our LED lamps with leakage protection.
- #6 terminal screws with self-lifting captive wire clamps accommodate #22 through two #12 AWG wires (0.5 - 4mm^2) per terminal.
- Operators conveniently mount in a round 1-13/64" (30.5mm) hole that is directly interchangeable with competitors units and eliminates the labor required for notching.

UNIQUE PRODUCT FEATURES

1. Our push-to-test pilot lights aid in the troubleshooting of the circuit.
2. Our seal is infused with a coating to eliminate cracking when exposed to harsh conditions such as heat, dryness and sunlight. This seal also acts as a light reflector because it is white which increases light output and improves visibility from all angles.
3. Our rugged Lexan™ lenses provide better visibility and can resist high impact for reliable performance in most environments, even in high ambient temperatures.
4. We utilize premium 130V incandescent and LED lamps for improved, long-lasting life.

WIRING DIAGRAM

Customer connections of line and test power supplies. Light unit is powered by the line circuit. Depressing the lens cap will disconnect the line and connect the test supply, confirming bulb status.

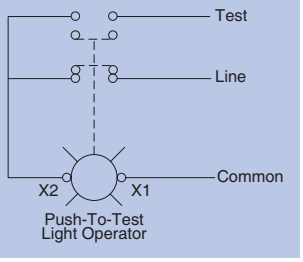

Some of Our Popular Configurations:

PUSH-TO-TEST PILOT LIGHTS W/POLYESTER CLAMP RING (TYPE 4X)

CATALOG NUMBER	DESCRIPTION	LIST
FVPTT120-IPBCAR	Full Voltage 120V w/Incandescent Lamp & Amber Lens	$102.00
FVPTT120-IPBCGN	Full Voltage 120V w/Incandescent Lamp & Green Lens	$102.00
FVPTT120-IPBCRD	Full Voltage 120V w/Incandescent Lamp & Red Lens	$102.00

IT'S EASY TO BUILD YOUR OWN PILOT LIGHT

Simply pick the code number from each of the sections below and combine them to build your part number.

20-277V Multi-Voltage Pilot Lights

I	II	III	–	IV	PLL V	VI	–	VII

Example: To build one of our most popular Pilot Lights, the part number would be I + II + III + IV + PLL + VI + VII or 30MV20-277DLW-PLLRD

I. OPERATOR TYPE

CODE	DESCRIPTION	LIST
30MV20-277	Non-Relampable Multi-Voltage Pilot Light	$107.00

II. LED LAMP FUNCTION

CODE	DESCRIPTION
D	Standard

SEE PAGE 33 FOR LAMP REPLACEMENT CHART AND PAGE 34 FOR TECHNICAL DATA.

III. LED LAMP COLOR

CODE	COLOR	LIST
LW	White	—

IV. CLAMP RING

CODE	DESCRIPTION	LIST
(Blank)	Black Polyester (Type 4X)	—
A	Aluminum (Type 4)	$ 4.30

c3controls LED lamps last 100,000 hours — *that's 11.4 years!*

DISCOUNT SCHEDULE E

V. LENS TYPE

CODE	DESCRIPTION	LIST
PLL	Pilot Light Lens	$ 11.00

VI. LENS COLOR

CODE	COLOR
AR	Amber
BE	Blue
CR	Clear
GN	Green
RD	Red
WE	White

VII. OPTIONS

CODE	DESCRIPTION	LIST
(Blank)	None	—
IP20	IP20 Guard	$ 4.00

Some of Our Popular Configurations:

MULTI-VOLTAGE PILOT LIGHTS

CATALOG NUMBER	DESCRIPTION	LIST
30MV20-277DLW-PLLAR	Multi-Voltage 20-277V, Non-Relampable w/ White LED and Amber Lens	$118.00
30MV20-277DLW-PLLGN	Multi-Voltage 20-277V, Non-Relampable w/ White LED and Green Lens	$118.00
30MV20-277DLW-PLLRD	Multi-Voltage 20-277V, Non-Relampable w/ White LED and Red Lens	$118.00

Available Lens Colors For Multi-Voltage Pilot Lights

30mm Multi-Voltage Pilot Lights

When you match up our 30mm Pilot Lights with our LED lamps you get a quality, long-lasting, leakage protected pilot device that withstands shock and vibration. Our state-of-the-art LED lamps last 100,000 hours—that's 11.4 years! And we nest them in a bright white cup that casts light through two lenses scored to improve visibility from all angles. c3controls' 30mm multi-voltage pilot lights are UL listed and rated Type 4/4X as standard to resist water and corrosion. In addition, these lights are listed for Type 1, 2, 3, 3R, 12 and 13, and meet global standards.

Product features include:

- Polyester construction for superior corrosion resistance, moisture rejection and electrical insulation.
- #6 terminal screws with self-lifting captive wire clamps to accommodate #22 through two #12 AWG wires (0.5 - 4mm^2) per terminal.
- Bi-polar design means functionality is independent of which lead is connected to each terminal.
- Rugged Lexan™ lenses can resist high impact for reliable performance in most environments—even in high ambient temperatures.
- Superior performance even in high vibration and shock applications.
- Enhanced safety with field installable IP20 terminal guards are transparent to maintain terminal visibility. Their construction provides easy access to the device terminals—so wiring is convenient and quick, and they snap securely in place without tools.

  For your convenience when marking terminals, our IP20 guards use Series WTB2 markers (see Section 22 Page 32), simplifying wiring and troubleshooting.

UNIQUE PRODUCT FEATURES

c3 Exclusive!

Eliminate the Headache of Multiple Lights to Match Multiple Voltages!

Our state-of-the-art, super bright LEDs and printed circuit boards allow you to operate this light at any voltage from 20V to 277V AC or DC without losing light intensity or consuming a lot of power. One light unit covers a lot of applications, reducing your inventory! All you have to do is choose your lens color.

- Wider operating voltage range of 20V-277V AC or DC.
- Depth behind the panel at 1-11/16" / 42.8mm.
- Integrated light circuit protection. We included a fusible link in the electronic circuit, resulting in predictable failure mode (open circuit) and improving reliability.
- A redesigned circuit allows you to use the light unit in a wider range of applications, including electronic and coil applications where leakage current and voltages may exist.

IT'S EASY TO BUILD YOUR OWN SELECTOR SWITCH

Simply pick the code number from each of the sections below and combine them to build your part number.

Selector Switches

_____ – _____ _____ _____ – _____ / _____ – _____

I II III IV V* VI* VII

Example: To build one of our most popular Selector Switches, the part number would be I + II + III + IV + V + VI + VII or SSO3-SHWE-NO/NO

*NOTE: Contact block configurations are based on circuit designations (see charts below).

I. SELECTOR SWITCH OPERATOR FUNCTION

CODE	POS./FUNCTION	LIST
SSO2	2/Maintained	$23.00
SROLR	2/Spring Return, L to R	$41.00
SRORL	2/Spring Return, R to L	$41.00
SSO3	3/Maintained	$23.00
SROLC	3/Spring Return, L to C	$41.00
SRORC	3/Spring Return, R to C	$41.00
SROLRC	3/Spring Return, L & R to C	$41.00
SSO4	4/Maintained	$23.00
SRO43	4/Spring Return, Pos. 4 to 3	$41.00
SRO1243	4/Spring Return, Pos. 1 to 2 and Pos. 4 to 3	$41.00

II. CLAMP RING

CODE	DESCRIPTION	LIST
(Blank)	Black Polyester (Type 4X)	—
A	Aluminum (Type 4)	$ 4.30

III. HANDLE TYPE

CODE	DESCRIPTION	LIST
SH	Standard	$ 9.80
SL	Lever	$ 9.80

Each operating handle is black with a factory assembled color insert.

IV. HANDLE INSERT COLOR

CODE	COLOR
BE	Blue
GN	Green
GY	Grey
RD	Red
WE	White
YW	Yellow

V. CONTACT BLOCK CONFIGURATION (LEFT SIDE)

CODE	DESCRIPTION	LIST
(Blank)	Operator without Contact Blocks	—
NO	1 Normally Open Contact Block	$13.00
NC	1 Normally Closed Contact Block	$13.00
EM	1 Early Make Contact Block	$17.00
DB	1 Delayed Break Contact Block	$17.00
NO-NO	2 Normally Open Contact Blocks	$26.00
NC-NC	2 Normally Closed Contact Blocks	$26.00
NO-NC	1 Normally Open and 1 Normally Closed Contact Blocks	$26.00

VI. CONTACT BLOCK CONFIGURATION (RIGHT SIDE)

CODE	DESCRIPTION	LIST
(Blank)	Operator without Contact Blocks	—
NO	1 Normally Open Contact Block	$13.00
NC	1 Normally Closed Contact Block	$13.00
EM	1 Early Make Contact Block	$17.00
DB	1 Delayed Break Contact Block	$17.00
NO-NO	2 Normally Open Contact Blocks	$26.00
NC-NC	2 Normally Closed Contact Blocks	$26.00
NO-NC	1 Normally Open and 1 Normally Closed Contact Blocks	$26.00

VII. OPTIONS

CODE	DESCRIPTION	LIST/PC*
(Blank)	None	—
IP20	IP20 Guard	$ 4.00

*NOTE: When choosing the IP20 option, in order to achieve IP20 protection a terminal guard must be assembled on each contact block configuration, increasing the List price $4.00 for each guard.

DISCOUNT SCHEDULE E

CONTACT BLOCK SELECTION FOR 2-POSITION SELECTOR SWITCHES

CIRCUIT DESIG.	HANDLE POSITION LEFT	HANDLE POSITION RIGHT	BLOCK CATALOG NUMBER	MOUNTING POSITION
A	O	X	CBNO	EITHER
B	X	O	CBNC	EITHER

CONTACT BLOCK SELECTION FOR 3-POSITION SELECTOR SWITCHES

CIRCUIT DESIG.	HANDLE POSITION LEFT	HANDLE POSITION CENTER	HANDLE POSITION RIGHT	BLOCK CATALOG NUMBER	MOUNTING POSITION
C	X	O	O	CBNO	LEFT
D	O	X	O	CBNC	EITHER
E	O	O	X	CBNO	RIGHT
F	O	X	X	CBDB	LEFT
G	X	O	X	CBEM	EITHER
H	X	X	O	CBDB	RIGHT

O = OPEN X = CLOSED

CONTACT BLOCK SELECTION FOR 4-POSITION SELECTOR SWITCHES

CIRCUIT DESIG.	HANDLE POSITION LEFT	HANDLE POSITION LT. CNT.	HANDLE POSITION RT. CNT.	HANDLE POSITION RIGHT	BLOCK CAT. #	MOUNTING POSITION
I	X	O	O	O	CBNO	LEFT
J	O	X	O	O	CBNC	RIGHT
K	O	O	X	O	CBNC	LEFT
L	O	O	O	X	CBNO	RIGHT
M	O	X	X	X	CBDB	LEFT
N	X	O	X	X	CBEM	RIGHT
O	X	X	O	X	CBEM	LEFT
P	X	X	X	O	CBDB	RIGHT

30mm Non-Illuminated Selector Switches

With our unique universal cam design, c3controls Selector Switches offer multiple functions in a single device eliminating the need to install separate devices to perform individual functions based on contact block configuration. All operators feature polyester housings, are UL Listed, and are rated Type 4/4X as standard for watertight and corrosion resistance. In addition, operators are also listed for Type 1, 2, 3, 3R, 12 and 13, and meet global standards requirements. Add-on contact blocks are available for up to 8 circuits per operator. See pages 4 & 5 for our complete line of 30mm standard contact blocks.

HANDLE POSITIONS

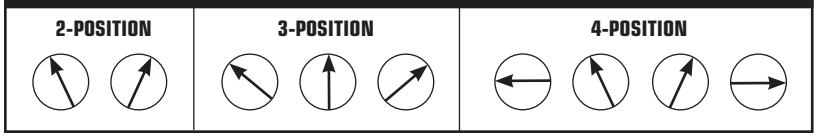

UNIQUE PRODUCT FEATURES

Save time & money - with c3controls, one cam does it all!

1. One-Cam does it all vs. our competitors who need up to fifteen cams to perform the same function. This One-Cam design eliminates the need for multiple cam configurations and selector switch configuration nightmares, saving time, inventory, money, and ensuring 100% cam selection configuration accuracy.

2. Our revolutionary U-Cup seal is infused with a Teflon coating to eliminate cracking when exposed to harsh conditions such as heat, dryness and sunlight.

3. All frictional parts are molded with an internal self-lubricant to provide outstanding wear and smooth cam operations without troublesome greases used by others that attracts dust and other particles in the area.

Some of Our Popular Configurations:

2-POSITION SELECTOR SWITCH OPERATORS WITH POLYESTER CLAMP RING (TYPE 4X)

CONTACT SYMBOL	CONTACT BLOCK MOUNTING POS. Viewed from front of operator	HANDLE POSITION 0=OPEN X=CLOSED		TYPE OF OPERATOR	MAINTAINED POSITION		SPRING RETURN FROM RIGHT TO LEFT		SPRING RETURN FROM LEFT TO RIGHT	
		LEFT	RIGHT		CATALOG #	LIST	CATALOG #	LIST	CATALOG #	LIST
1 NO	EITHER	0	X	STANDARD	SS02-SHWE-NO	$45.80	SRORL-SHWE-NO	$63.80	SROLR-SHWE-NO	$63.80
				LEVER	SS02-SLWE-NO	$45.80	SRORL-SLWE-NO	$63.80	SROLR-SLWE-NO	$63.80
1 NC	EITHER	X	0	STANDARD	SS02-SHWE-NC	$45.80	SRORL-SHWE-NC	$63.80	SROLR-SHWE-NC	$63.80
				LEVER	SS02-SLWE-NC	$45.80	SRORL-SLWE-NC	$63.80	SROLR-SLWE-NC	$63.80

3-POSITION SELECTOR SWITCH OPERATORS WITH POLYESTER CLAMP RING (TYPE 4X)

CONTACT SYMBOL	CONTACT BLOCK MOUNTING POS. Viewed from front of operator	HANDLE POSITION 0=OPEN X=CLOSED			TYPE OF OPERATOR	MAINTAINED POSITION		SPRING RETURN FROM LEFT TO CENTER		SPRING RETURN FROM RIGHT TO CENTER		SPRING RETURN FROM LEFT OR RIGHT TO CENTER	
		LEFT	CENTER	RIGHT		CATALOG #	LIST	CATALOG #	LIST	CATALOG #	LIST	CATALOG #	LIST
NO/NO	LEFT	X	0	0	STANDARD	SS03-SHWE-NO/NO	$58.80	SROLC-SHWE-NO/NO	$76.80	SRORC-SHWE-NO/NO	$76.80	SROLRC-SHWE-NO/NO	$76.80
	RIGHT	0	0	X	LEVER	SS03-SLWE-NO/NO	$58.80	SROLC-SLWE-NO/NO	$76.80	SRORC-SLWE-NO/NO	$76.80	SROLRC-SLWE-NO/NO	$76.80

Mix and Match Any Insert Color and Selector Switch Handle

Standard Handle — Lever Handle

IT'S EASY TO BUILD YOUR OWN SELECTOR SWITCH

Simply pick the code number from each of the sections below and combine them to build your part number.

Keyed Selector Switches

____ ____ ____ – ____ / ____ – ____

I II III IV V* VI*

Example: To build one of our most popular Keyed Selector Switches, the part number would be **I + II + III + IV + V + VI** or **KOSS2KA-NO**

*NOTE: Contact block configurations are based on circuit designations (see page 26 for circuit designation charts).

I. CLAMP RING

CODE	DESCRIPTION	LIST
(Blank)	Black Polyester (Type 4X)	—
A	Aluminum (Type 4)	$ 4.30

II. KEYED SELECTOR SWITCH OPERATOR FUNCTION

CODE	POS./FUNCTION	AVAIL. KEY REMOVAL POSITION(S)	LIST
KOSS2	2/Maintained	KA,KR,KL	$101.00
KOSRRL	2/Spring Return, R to L	KL	$117.00
KOSRLR	2/Spring Return, L to R	KR	$117.00
KOSS3	3/Maintained	KA,KR,KL,KC, KLR,KLC,KRC	$101.00
KOSRLC	3/Spring Return, L to C	KC,KR,KRC	$117.00
KOSRRC	3/Spring Return, R to C	KC,KL,KLC	$117.00
KOSRLRC	3/Spring Return, L&R to C	KC	$117.00
KOSS4	4/Maintained*	KA	$101.00

*NOTE: Consult factory for special key removal positions (not available for guaranteed same day shipping).

III. KEY REMOVAL POSITION

CODE	REMOVAL POSITION
KA	All
KR	Right Only
KL	Left Only
KC	Center Only
KLR	Left & Right Only
KLC	Left & Center Only
KRC	Right & Center Only

IV. CONTACT BLOCK CONFIGURATION (LEFT SIDE)

CODE	DESCRIPTION	LIST
(Blank)	Operator without Contact Blocks	—
NO	1 Normally Open Contact Block	$ 13.00
NC	1 Normally Closed Contact Block	$ 13.00
EM	1 Early Make Contact Block	$ 17.00
DB	1 Delayed Break Contact Block	$ 17.00
NO-NO	2 Normally Open Contact Blocks	$ 26.00
NC-NC	2 Normally Closed Contact Blocks	$ 26.00
NO-NC	1 Normally Open and 1 Normally Closed Contact Blocks	$ 26.00

V. CONTACT BLOCK CONFIGURATION (RIGHT SIDE)

CODE	DESCRIPTION	LIST
(Blank)	Operator without Contact Blocks	—
NO	1 Normally Open Contact Block	$ 13.00
NC	1 Normally Closed Contact Block	$ 13.00
EM	1 Early Make Contact Block	$ 17.00
DB	1 Delayed Break Contact Block	$ 17.00
NO-NO	2 Normally Open Contact Blocks	$ 26.00
NC-NC	2 Normally Closed Contact Blocks	$ 26.00
NO-NC	1 Normally Open and 1 Normally Closed Contact Blocks	$ 26.00

VI. OPTIONS

CODE	DESCRIPTION	LIST/PC*
(Blank)	None	—
IP20	IP20 Guard	$ 4.00

*NOTE: When choosing the IP20 option, in order to achieve IP20 protection a terminal guard must be assembled on each contact block configuration, increasing the List price $4.00 for each guard.

DISCOUNT SCHEDULE **E**

Keyed Switch Options

Alternate Key Combinations: Up to 9 different key combinations (CC series) are available. To order locks keyed differently, consult factory or specify on order and increase the List price $60.00 per operator.

Master Keys: A master key is available that works in all 9 CC series key combinations. To order, specify part number MS MK1250 ($43.00 per set of two master keys).

Extra or Replacement Keys: Available for standard keyed selector switches only. To order, specify part number ES201 ($8.60 per set of two keys).
NOTE: Two keys come standard with each operator.

KEY POSITIONS

2-POSITION	3-POSITION	4-POSITION

30mm Keyed Selector Switches

c3controls Keyed Selector Switches offer multiple functions in a single device eliminating the need to install separate devices with individual functions based on contact block configuration. All operators feature polyester housings and all locks are premium quality brass for superior corrosion resistance. Keys are made of extra heavy brass for long life. Our Keyed Selector Switches are UL Listed and are rated Type 4/4X as standard. In addition, operators are also listed for Type 1, 2, 3, 3R, 12 and 13, and meet global standards requirements. We also offer you the opportunity to choose the appropriate clamp ring for your specific work environment; polyester clamp rings, which are designed to provide you with a modern appearance, or polished aluminum clamp rings for those who prefer a shiny rugged metal appearance. Add-on contact blocks are available for up to 8 contacts per operator. See pages 4 & 5 for our complete line of 30mm standard contact blocks.

UNIQUE PRODUCT FEATURES

Save time & money - with c3controls, one cam does it all!

1. One-Cam does it all vs. our competitors who need up to fifteen cams to perform the same function. This One-Cam design eliminates the need for multiple cam configurations and selector switch configuration nightmares, saving time, inventory, money, and ensuring 100% cam selection configuration accuracy.
2. Our revolutionary U-Cup seal is infused with a Teflon coating to eliminate cracking when exposed to harsh conditions such as heat, dryness and sunlight.
3. All frictional parts are molded with an internal self-lubricant to provide outstanding wear and smooth cam operations without troublesome greases used by others that attract dust and other particles in the area.

Some of Our Popular Configurations:

2-POSITION KEYED SELECTOR SWITCH OPERATORS WITH POLYESTER CLAMP RING (TYPE 4X)

CONTACT SYMBOL	CONTACT BLOCK MOUNTING POS. (Viewed from front of operator)	HANDLE POSITION 0=OPEN X=CLOSED		TYPE OF OPERATOR	MAINTAINED POSITION		SPRING RETURN FROM RIGHT TO LEFT		SPRING RETURN FROM LEFT TO RIGHT	
		LEFT	RIGHT		CATALOG #	LIST	CATALOG #	LIST	CATALOG #	LIST
1 NO	EITHER	0	X	Key Removal Pos						
				L	KOSS2KL-NO	$114.00	KOSRRLKL-NO	$130.00	—	—
				R	KOSS2KR-NO	$114.00	—	—	KOSRLRKR-NO	$130.00
				L & R	KOSS2KA-NO	$114.00	—	—	—	—
1 NC	EITHER	X	0	Key Removal Pos						
				L	KOSS2KL-NC	$114.00	KOSRRLKL-NC	$130.00	—	—
				R	KOSS2KR-NC	$114.00	—	—	KOSRLRKR-NC	$130.00
				L & R	KOSS2KA-NC	$114.00	—	—	—	—

3-POSITION KEYED SELECTOR SWITCH OPERATORS WITH POLYESTER CLAMP RING (TYPE 4X)

CONTACT SYMBOL	CONTACT BLOCK MOUNTING POS. (Viewed from front of operator)	HANDLE POSITION 0=OPEN X=CLOSED			TYPE OF OPERATOR	MAINTAINED POSITION		SPRING RETURN FROM LEFT TO CENTER		SPRING RETURN FROM RIGHT TO CENTER		SPRING RETURN FROM LEFT OR RIGHT TO CENTER	
		LEFT	CENTER	RIGHT		CATALOG #	LIST	CATALOG #	LIST	CATALOG #	LIST	CATALOG #	LIST
NO/NO	LEFT	X	0	0	Key Rem Pos								
	RIGHT	0	0	X	L	KOSS3KL-NO/NO	$127.00	—	—	KOSRRCKL-NO/NO	$143.00	—	—
					R	KOSS3KR-NO/NO	$127.00	KOSRLCKR-NO/NO	$143.00	—	—	—	—
					C	KOSS3KC-NO/NO	$127.00	KOSRLCKC-NO/NO	$143.00	KOSRRCKC-NO/NO	$143.00	KOSRLRCKC-NO/NO	$143.00
					Key Rem Pos								
					L & R	KOSS3KLR-NO/NO	$127.00	—	—	—	—	—	—
					L & C	KOSS3KLC-NO/NO	$127.00	—	—	KOSRRCKLC-NO/NO	$143.00	—	—
					R & C	KOSS3KRC-NO/NO	$127.00	KOSRLCKRC-NO/NO	$143.00	—	—	—	—

IT'S EASY TO BUILD YOUR OWN LEGEND PLATE

Simply pick the code number from each of the sections below and combine them to build your part number.

Legend Plates

_____ _____ – _____ – _____
I II III IV

Legend plates feature 2 lines of text with approximately 16 characters per line. Upper case is standard unless specified.

*The tall legend plate (LPT) features 3 lines of text with approximately 16 characters per line and the Potentiometer legend plate comes standard with a scale and one or two lines of text, see chart D below.

I. LEGEND PLATE TYPE

CODE	DESCRIPTION	LIST
LP	Standard 2"h x 2"w	$ 4.00
LPN	Narrow 2"h x 1-3/4"w	$ 4.00
LPS	Short 1-3/4"h x 2"w	$ 4.00
LPT	Tall 2-1/4"h x 2"w*	$ 5.00
LPR	Standard Round 2-13/32" Dia.	$ 9.00
LPRM	Medium Round 2-3/4" Dia.	$11.00
LPRJ	Jumbo Round 3-3/4" Dia.	$12.00

II. FACE AND LETTER COLOR

CODE	FACE COLOR	LETTER COLOR
AL	Aluminum	Black
(Blank)	Black	White
BE	Blue	White
GN	Green	White
RD	Red	White
WE	White	Black
YW	Yellow	Black

III. LEGEND DESIGNATION

A. PUSH BUTTONS AND LIGHTS

CODE	DESCRIPTION
00	(Blank)
01	AUTO
02	CLOSE
31	CYCLE START
100	CYCLE STOP
03	DOWN
102	EMERGENCY
04	EMERGENCY STOP
06	FAST
101	FAULT
07	FORWARD
08	HAND
32	HIGH
33	IN
09	INCH
10	JOG
38	JOG FORWARD
39	JOG REVERSE
34	LOW
35	LOWER
11	MANUAL
26	MOTOR RUN
12	OFF
13	ON
14	OPEN
36	OUT
27	OVERLOAD
15	POWER OFF
16	POWER ON
30	PUSH TO RESET
17	PUSH TO TEST
37	RAISE
109	READY
18	RESET
19	REVERSE
20	RUN
21	SLOW
22	START
23	STOP
24	TEST
29	TRIP
25	UP

B. 2-POSITION SELECTOR

CODE	LEGEND LEFT	LEGEND RIGHT
00	(Blank)	(Blank)
50	AUTO	HAND
68	AUTO	MANUAL
51	DOWN	UP
63	FAST	SLOW
52	FWD	REV
53	HAND	AUTO
73	HIGH	LOW
54	INCH	RUN
75	LEFT	RIGHT
70	LOCAL	REMOTE
55	MANUAL	AUTO
56	OFF	ON
57	ON	OFF
58	OPEN	CLOSE
65	PULL START	PUSH STOP
66	PUSH OFF	PULL ON
64	PUSH ON	PUSH OFF
67	PUSH TO STOP	PULL TO START
71	RAISE	LOWER
59	REV	FWD
60	RUN	JOG
69	SLOW	FAST
61	START	STOP
62	STOP	START
74	SUMMER	WINTER
72	UP	DOWN

C. 3-POSITION SELECTOR

CODE	LEGEND LEFT	LEGEND CENTER	LEGEND RIGHT
00	(Blank)	(Blank)	(Blank)
108	A	O	H
92	AUTO	OFF	HAND
93	AUTO	MAN	OFF
80	DOWN	OFF	UP
81	FWD	AUTO	REV
82	FWD	OFF	REV
107	H	O	A
83	HAND	OFF	AUTO
94	HIGH	OFF	LOW
99	JOG	OFF	AUTO
90	LOCAL	OFF	REMOTE
84	MANUAL	OFF	AUTO
89	OFF	RUN	START
85	OFF	START	RUN
86	OFF	1	2
95	OPEN	OFF	CLOSE
91	RAISE	OFF	LOWER
96	SLOW	OFF	FAST
97	SUMMER	OFF	WINTER
98	UP	OFF	DOWN
87	1	OFF	2
88	1	2	3

D. POTENTIOMETER*

CODE	DESCRIPTION
40	Blank Legend 0 - 10
41	"SPEED" 0 - 10
43	Blank Legend 0 - 100
44	"SPEED" 0 - 100

DISCOUNT SCHEDULE E

IV. ADHESIVE BACK

CODE	DESCRIPTION
(Blank)	No Adhesive Back
A	Adhesive Back

IT'S EASY TO BUILD YOUR OWN LEGEND PLATE

Simply pick the code number from each of the sections below and combine them to build your part number.

Special Legend Plates

_____ _____ – SP – _____

I II III IV

All legend plates are a 2-ply laminated plastic, laser engraved for a permanent and quality appearance. Uppercase is standard unless specified.

I. LEGEND PLATE TYPE

CODE	DESCRIPTION	LIST
LP	Standard 2"h x 2"w	$ 4.00
LPN	Narrow 2"h x 1-3/4"w	$ 4.00
LPS	Short 1-3/4"h x 2"w	$ 4.00
LPT	Tall 2-1/4"h x 2"w*	$ 5.00
LPR	Standard Round 2-13/32" Dia.	$ 9.00
LPRM	Medium Round 2-3/4" Dia.	$11.00
LPRJ	Jumbo Round 3-3/4" Dia.	$12.00

Legend plates feature 2 lines of text with approximately 16 characters per line.

*The tall legend plate (LPT) features 3 lines of text with 16 characters per line.

DISCOUNT SCHEDULE **E**

II. FACE AND LETTER COLOR

CODE	FACE COLOR	LETTER COLOR
AL	Aluminum	Black
(Blank)	Black	White
BE	Blue	White
GN	Green	White
RD	Red	White
WE	White	Black
YW	Yellow	Black

III. LEGEND DESIGNATION

CODE	DESCRIPTION	LIST
SP	Special Legend	$14.00

IV. ADHESIVE BACK

CODE	DESCRIPTION
(Blank)	No Adhesive Back
A	Adhesive Back

Upon receipt of your order, legend plates will be set-up as specified and a proof will be sent to you prior to production to ensure accuracy.

To order, submit your drawing to:

Mail: c3controls
Attn: Customer First
PO Box 496
Beaver, PA 15009

Fax: 724.775.5283

Email: legendplates@c3controls.com

To help simplify your order process, templates are available by calling our factory at 724.775.7926 or reference one of the drawings shown on page 42.

Special legend plates are not available for same day shipping.

(Sample custom plate)

Custom Legend Plates

- ***Add your Corporate Logo!*** Send us your corporate logo electronically to promote your company image in a clean professional legend plate.
- Available in 2-ply 12" x 24" (304.8mm x 609.6mm) sheets of laminated plastic for custom laser engraving.
- To order, specify part number LP-CP (no adhesive back) or LP-CP-A (adhesive back).
- Initial Set-Up Fee Per Legend Plate: $50/hour (minimum fee $50.00).
- $2.00/Square Inch (minimum $18.00).
- Design services available. Consult factory for details and hourly rate.
- Custom legend plates are not available for same-day shipping.

To order, submit your drawing to:

Mail: c3controls
Attn: Customer First
PO Box 496
Beaver, PA 15009

Fax: 724.775.5283

Email: legendplates@c3controls.com

EXTENDED CLAMP RINGS

We offer four types of 30mm extended clamp rings that guard against accidental operation. Use our Extended Clamp Rings (ECR or AECR) with flush caps, our Clear Guarded Clamp Ring (EECR) with illuminated push buttons and our Large Extended Clamp Ring (LECR) with flush or extended caps, which also provides easier access to your push buttons.

FOR USE WITH NON-ILLUMINATED CAPS		
CODE	**DESCRIPTION**	**LIST**
ECR	Extended Ring	$ 6.00
LECR	Large Extended Ring	$10.00
AECR	Aluminum Extended Ring	$10.00

FOR USE WITH ILLUMINATED LENS		
CODE	**DESCRIPTION**	**LIST**
EECR	Guarded Clear Polyester Ring	$ 8.00

PANEL GASKETS

Our panel gaskets are constructed of Neoprene for long life and low compression set and provide a watertight seal. Panel gaskets are supplied to accommodate different panel thickness. In order to meet Type 4/4X requirements, at least one 1/16" (1.6mm) gasket must be used. NOTE: All c3controls 30mm operators are provided with gaskets.

CODE	DESCRIPTION	LIST
PG2	1/16" (1.6mm) Gasket	$ 1.00
PG6	3/16" (4.8mm) Gasket	$ 1.00

THRUST & TRIM WASHERS

Anti-rotation device for use with 30mm push buttons, selector switches and pilot lights to provide additional protection from rotation and aid in alignment. This product is optional with c3controls gasket technology.

CODE	DESCRIPTION	LIST
TTW	30mm Anti-Rotation Washers	$ 4.00

LAMP REMOVAL TOOL

Used to facilitate the removal of lamps particularly in illuminated push buttons and push-to-test operators.

CODE	DESCRIPTION	LIST
LRT	Lamp Removal Tool	$ 8.00

LOCK OFF ATTACHMENTS

c3controls offers a wide variety of 30mm corrosive resistant lock-off attachments for maintained and momentary push buttons and selector switches. Our LOAX, LOAM and LOAP lock-offs permit locking operators in the depressed position. Our LOAFC lock-off covers and locks the operator so its position cannot be changed and features a 1/4" (6.4mm) diameter padlocking hasp.

LOAFC

LOAX/LOAM/LOAP

CODE	FITS	LIST
LOAX	Standard Extended Cap	$32.00
LOAM	Standard Momentary Mushroom Cap	$32.00
LOAP	Push-Pull Maintained Mushroom Cap (PPMC) or Push Maintained Extended Cap (PMXC)	$32.00
LOAFC	Push Buttons with Flush, Mushroom, Guarded Cap, and Selector Switches with Standard Lever Handle. Not compatible with Momentary Illuminated Guarded (GIPBC), Jumbo Mushroom Cap, or Keyed Selector Switches.	$50.00

HOLE PLUG

Use to seal unused panel holes. Our hole plug comes with additional sealing panel gaskets to ease installation and is rated Type 4X.

CODE	DESCRIPTION	LIST
HP	30mm Grey Hole Plug	$11.00

CLAMP RING WRENCH

To simplify tightening and loosening of standard polyester and aluminum 1-3/8" (34.9mm) octagonal clamp rings. Won't scratch your lens or panel.

CODE	DESCRIPTION	LIST
CRW	30mm Clamp Ring Wrench	$20.00

GUARD ATTACHMENT

Our PPGD guards against accidental operation and is made of a high strength polyester material. Compatible with momentary or maintained, illuminated or non-illuminated push buttons. NOTE: Not suitable for the push buttons with shrouded caps or jumbo mushroom caps.

CODE	COLOR	FITS	LIST
PPGD	Black	Maintained Push Buttons	$40.00
PPGD-YW	Yellow	Maintained Push Buttons	$40.00

IP20 TERMINAL GUARDS

Our IP20 terminal guards protect against accidental contact with live parts and can be ordered separately as an accessory or factory installed providing the convenience of a single catalog number.

NOTE: IP20 terminal guards must be installed before wiring. For factory installed guards, refer to the operator page to determine the appropriate part number. For terminal marking convenience, our guards can be utilized with Series WTB2 markers (see Section 22 Page 32).

CODE	FITS	LIST
CBIP20	Standard Contact Blocks	$ 4.00
FVIP20	Full Voltage Illuminated Push Button Operators, Pilot Lights and Push-To-Test Light Modules	$ 4.00
MLIP20	Resistor Momentary Illuminated Push Button Operators and Pilot Lights including Multi-Voltage Pilot Lights	$ 4.00

DISCOUNT SCHEDULE E

LED & INCANDESCENT REPLACEMENT LAMPS

c3controls offers a full range of lamp options in a miniature bayonet base for direct interchangeability which provides flexibility in choosing the best lamp for each installation application. Multiple voltage options in Incandescent and LED lamps are available. Please refer to the chart at the bottom of the page to determine the appropriate replacement lamp based on your operator voltage.

LED Lamps

LED ____ ____
I II III

To order LED Lamps, the part number would be LED + II + III

I. LAMP TYPE

CODE	DESCRIPTION	LIST
LED	LED Lamp	$28.00

Our LED lamps feature built-in leakage protection.

II. VOLTAGE

CODE	DESCRIPTION
6	6V*
12	12V
24	24V
130	130V

*NOTE: Product not available for same-day shipping. Contact our Customer First Team for lead time and minimum order quantity.

III. LAMP COLOR

CODE	COLOR
AR	Amber
BE	Blue
GN	Green
RD	Red
WE	White

Incandescent Lamps

CODE	VOLTAGE	LIST
FVB6	6V*	$ 4.00
FVB12	12V	$ 4.00
FVB24	24V	$ 4.00
FVB55	55V	$ 8.00
FVB120	120V	$ 8.00

*NOTE: Product not available for same-day shipping. Contact our Customer First Team for lead time and minimum order quantity.

DISCOUNT SCHEDULE **E**

30MM REPLACEMENT LAMP REFERENCE CHART

(FOR REFERENCE ONLY - USE CHARTS ABOVE TO ORDER)

OPERATOR CODE	OPERATOR VOLTAGE	LED (ALL COLORS)	INCANDESCENT
FVLU6	Full Voltage 6V AC/DC	LED6	FVB6
FVLU12	Full Voltage 12V AC/DC	LED12	FVB12
FVLU24	Full Voltage 24V AC/DC	LED24	FVB24
FVLU120	Full Voltage 120V AC/DC	LED130	FVB120
RLU120L	Resistor 120V AC/DC*	LED24	—
RLU120I	Resistor 120V AC/DC*	—	FVB55
RLU240L	Resistor 240V AC/DC*	LED24	—
RLU240I	Resistor 240V AC/DC*	—	FVB120
RLU240N	Resistor 240V AC/DC*	—	—
RLU480	Resistor 480V AC/DC*	LED130	—
RTLU6	Dual Input 6V AC/DC	LED6	FVB6
RTLU12	Dual Input 12V AC/DC	LED12	FVB12
RTLU24	Dual Input 24V AC/DC	LED24	FVB24
RTLU120L	Dual Input 120V AC/DC	LED130	—
RTLU120	Dual Input 120V AC/DC	—	FVB55

*NOTE: Lamps are unique to Resistor Light Units. Refer to side of light unit for correct replacement lamp part number.

30MM INDUSTRIAL PILOT DEVICES

ELECTRICAL RATINGS

Lamp	Industry Number	Rated Volts	Lumens (MSCD)	Design Life (Hrs.)	Current Draw (mA)	Lamp Type	Shock & Vibration	Leakage Protection
FVB6	1866	6.3V	0.65	5,000	250	Incandescent	Very Good	N/A
FVB12	756	14V	0.31	15,000	80	Incandescent	Good	N/A
FVB24	757	28V	0.62	7,500	80	Incandescent	Good	N/A
FVB55	1835	55V	1.1	5,000	50	Incandescent	Good	N/A
FVB120	**	130V	0.36	10,000	20	Incandescent	Good	N/A
LED6	**	6V†	Varies w/ Color 2000 mcd Typical	100,000	50	LED	Excellent	14 mA
LED12	**	12V†		100,000	<20	LED	Excellent	4 mA
LED24	**	24V†		100,000	<20	LED	Excellent	4 mA
LED130	**	120/130V†		100,000	<10	LED	Excellent	2 mA

**Designates a lamp design optimized for c3controls illuminated devices. See LED replacement lamps on page 33.
† LED voltage tolerance is +/- 10%

MULTI-VOLTAGE POWER CONSUMPTION & CURRENT DRAW

System Voltage	AC Current Draw (mA)	DC Current Draw (mA)	Power Consumption (W)
24V	21	20	AC: <1 DC: <1/2
48V	17	7	
120V	3.5	—	
125V	—	3	
240V	2.5	—	
250V	—	2	
277V	2.5	—	

PROTECTION FEATURES

Fused to Fail Open	Yes
DIELECTRIC STRENGTH (TERMINAL TO GROUND)	2200V for 1 Minute

STANDARD CONTACTS

	Utilization Category					
		IEC	UL	Make Rating	Break Rating	Ith-Thermal Current
	AC	AC-15	A600	7200VA	720VA	10A
	DC	DC-13	P300	138VA	138VA	5A

NOTE: For AC voltage below 72V AC the max. allowed switching current is 10A = Ith. For DC voltages below 28V DC the max. allowed switching current is 5A = Ith.

For switching applications below 24V/40mA - Hermetic REED contacts are recommended. Hermetic Reeds are also excellent in environments containing chemical vapors, oxidizing agents, and explosive gases. Please refer to the HAZARDOUS section of the Series 30 devices for more information. Available on c3controls' 30MM products only.

	UNITS	
ENVIRONMENTAL RATINGS		
Operators		Rated and Certified for use in Type 1, 2, 3, 3R, 4/4X, 12, & 13 and IP65
Operating Temperature	°F / °C	-40 to +131 / -40 to +55
Storage Temperature	°F / °C	-40 to +185 / -40 to +85

NOTE: Operating environments below freezing temperatures are assumed to be absent of freezing liquids or pollutants.

TERMINAL & WIRING CONSIDERATION		
AWG Conductor		22-12 CU (Copper only - Solid & Stranded) [.5 ~ 4mm²] One or two wires permitted per termination
Recommended Torque	in-Lb. [Nm]	7 – 10 [0.8 – 1.0]
CONSTRUCTION		
OPERATING FORCES		
PUSH BUTTONS (OPERATORS ONLY)		
Momentary	lbs. [N]	1.3 [5.8]
Illuminated Momentary	lbs. [N]	2.8 [12.4]
Maintained	lbs. [N]	4 – 6 [17.9 – 26.7]
Illuminated Maintained	lbs. [N]	4.6 [20.5]

30MM INDUSTRIAL PILOT DEVICES		
	UNITS	
CONSTRUCTION (CONTINUED)		
OPERATING FORCES (CONTINUED)		
RESET PUSH BUTTON	lbs. [N]	1.5 [6.7]
SELECTOR SWITCHES		
Maintained	in-lbs. [Nm]	1.7 [.19]
Momentary	in-lbs. [Nm]	1.7 [.19]
Key Operated	in-lbs. [Nm]	1.7 [.19]
CABLE PULL		
Standard	lbs. [N]	4 – 6 [17.9 – 26.7]
Heavy Duty	lbs. [N]	13 [57.8]
PUSH-TWIST RELEASE	lbs. [N]	4.7 [20.9]
POTENTIOMETER		
2 Watt "J" Series	in-oz. [Nm]	3 – 12 [.11 Max.] (300° Rotation)
STANDARD CONTACT BLOCKS	lbs. [N]	1 [4.45]
INDICATING LIGHTS		Refer to the appropriate Lamp Data
MULTI-VOLTAGE LIGHTS	VAC/VDC	20-277 (Burden .816W Max.)
MECHANICAL ENDURANCE		
PUSH BUTTONS		
Maintained	Ops.	250,000
Momentary	Ops.	5,000,000
SELECTOR SWITCHES	Ops.	500,000
ALL OTHER DEVICES	Ops.	250,000
STANDARD CONTACT BLOCKS	Ops.	10,000,000
INDICATING LIGHTS	Ops.	Refer to the appropriate Lamp Data
MATERIALS		
Operator Housings		Thermoplastic Polyester and Polyester Blends (UV Stabilized for outdoor use)
Operator Caps and Handles - Non-Illuminated (Glass Reinforced Grades)		Thermoplastic Polyester and Polyester Blends (UV Stabilized for outdoor use)
Mounting Rings and Nuts		Thermoplastic Polyester and Polyester Blends (UV Stabilized for outdoor use)
Thrust Washer		Thermoplastic Polyester and Polyester Blends (UV Stabilized for outdoor use)
Trim Washer		Thermoplastic Polyester and Polyester Blends (UV Stabilized for outdoor use)
Pilot Light Lens		High Impact Polycarbonate (UV Stabilized for outdoor use)
Transparent Push Button and Mushroom Caps		High Impact Polycarbonate (UV Stabilized for outdoor use)
Certain CAM and Bearing Parts		Custom Polymers: Teflon, Silicon and Moly-Disulfide impregnated for improved wearability
Rubber Boots		Custom Polymers: Fluorosilicone and Thermoplastic Neoprene
Seals		Neoprene Gaskets
		Thermoplastic - Molded Neoprene and Alloy Derivitives
		BUNA N - Rubber - Teflon Coated
		Thermoplastic - Elastomer Molded Seals
		Fluorosilicone - Boots
Push Pull Bearings		Brass and Stainless Steel
Internal Tubes for Maintained Devices		Brass and Stainless Steel
Detents for Maintained Devices		Brass and Stainless Steel
Springs		Stainless Steel throughout
Optional Mounting Nut		Aluminum
ROHS COMPLIANCE		For RoHS compliance documentation by product, refer to www.c3controls.com

MOMENTARY & MAINTAINED NON-ILLUMINATED PUSH BUTTONS

Fully-assembled operators come standard with one 3/16" (4.8mm) and three 1/16" (1.6mm) gaskets.
See mounting gasket specifications chart #3 on page 42.

Non-Illuminated Operator (shown with Flush Cap)

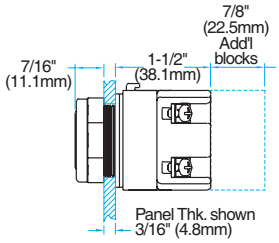

Momentary Flush Cap

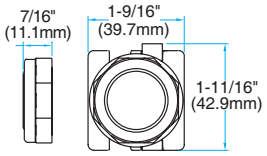

Momentary Guarded Flush Cap

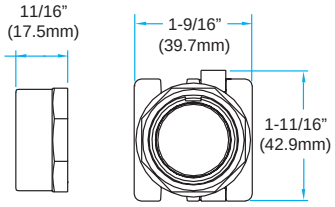

Momentary Extended Cap

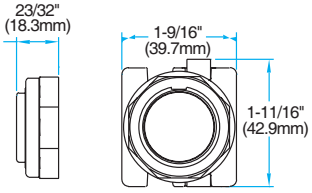

Momentary Guarded Extended Cap

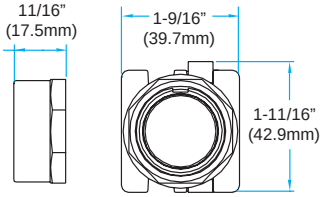

Momentary Standard Rubber Boot

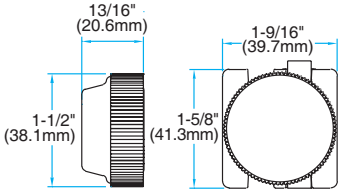

Momentary 1-1/2" (38mm) Mushroom Cap

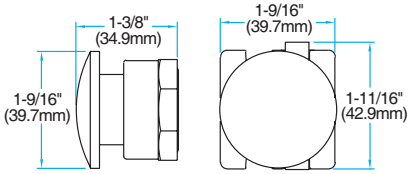

Momentary 2-1/4" (57.2mm) Jumbo Mushroom Cap

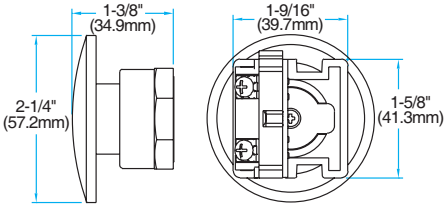

Momentary Fluorosilicone Rubber Boot

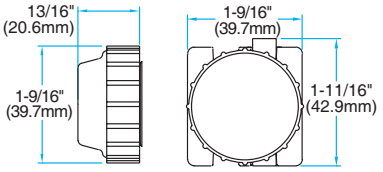

Momentary 1-1/2" (38mm) Shrouded Mushroom Cap

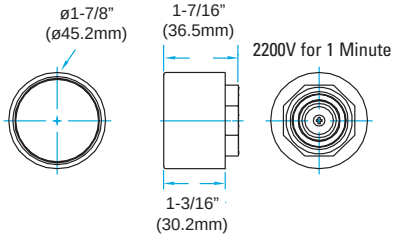

Momentary 2-1/4" (57.2mm) Shrouded Jumbo Mushroom Cap

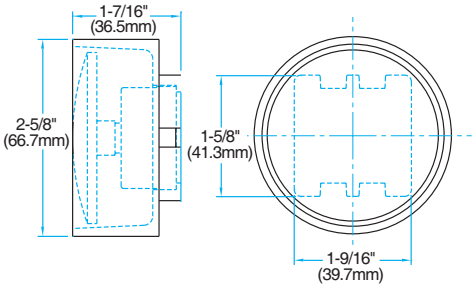

2-Position Push-Pull Maintained 1-1/2" (38mm) Mushroom Cap

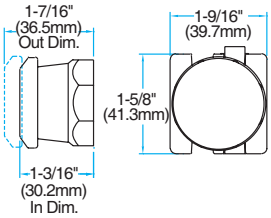

2-Position Push-Pull Maintained 2-1/4" (57.2mm) Jumbo Mushroom Cap

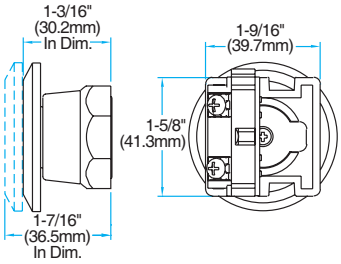

2-Position Push-Twist Maintained 1-1/2" (38mm) Mushroom Cap

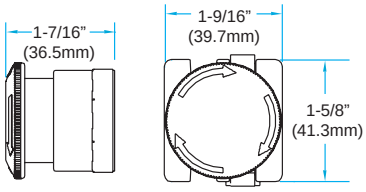

MOMENTARY ILLUMINATED PUSH BUTTONS

Fully-assembled operators come standard with one 3/16" (4.8mm) and three 1/16" (1.6mm) gaskets.
See mounting gasket specifications chart #3 on page 42.

Illuminated Full Voltage, Resistor and Dual-Input Operators (shown with IPBC)

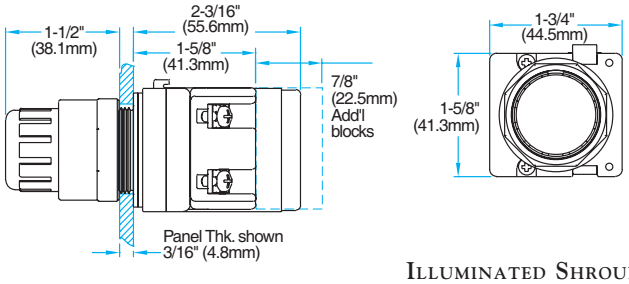

Illuminated Full Voltage Operator (shown with IPBCM)

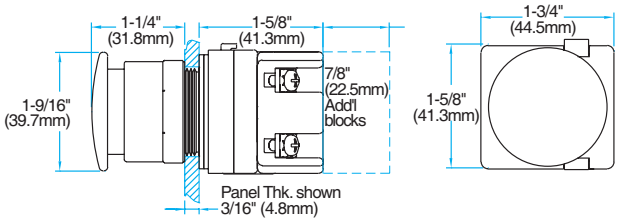

Illuminated Shrouded Mushroom Lens (SIPBCM)

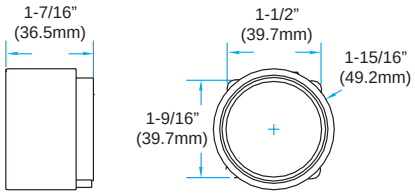

Illuminated Guarded Lens (GIPBC)

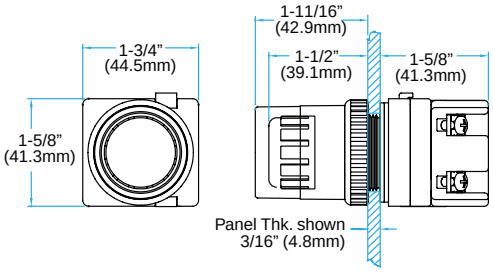

2 & 3 POSITION PUSH-PULL MAINTAINED ILLUMINATED PUSH BUTTONS

Fully-assembled operators come standard with one 3/16" (4.8mm) and three 1/16" (1.6mm) gaskets.
See mounting gasket specifications chart #1 on page 42.

Illuminated Full Voltage Operator (shown with IMC)

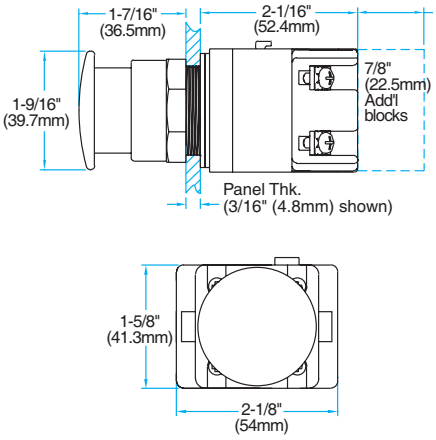

Illuminated Resistor Operator (shown with IMC)

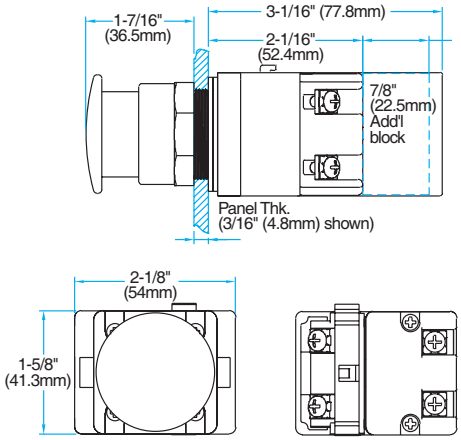

RESET PUSH BUTTON

Fully-assembled operators come standard with one 3/16" (4.8mm) and three 1/16" (1.6mm) gaskets.
See mounting gasket specifications chart #3 on page 42.

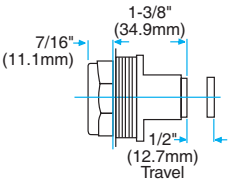

WOBBLE STICK

Fully-assembled operators come standard with one 3/16" (4.8mm) and three 1/16" (1.6mm) gaskets.
See mounting gasket specifications chart #3 on page 42.

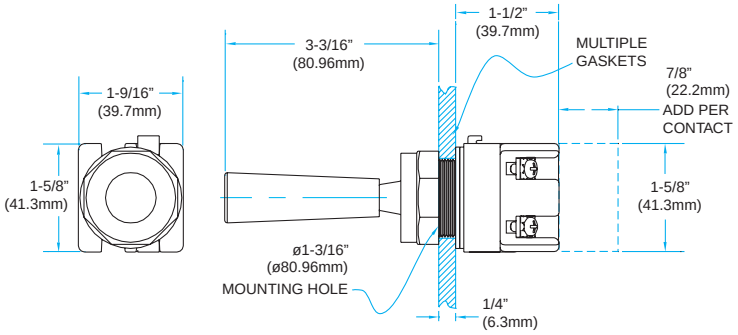

GUARD ATTACHMENT

PPGD

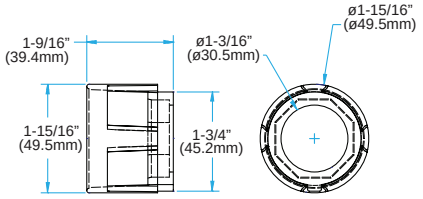

POTENTIOMETER WITH & WITHOUT TERMINAL BLOCK

Fully-assembled operators come standard with one 3/16" (4.8mm) and three 1/16" (1.6mm) gaskets.
See mounting gasket specifications chart #3 on page 42.

Potentiometer Operator (shown without Terminal Block)

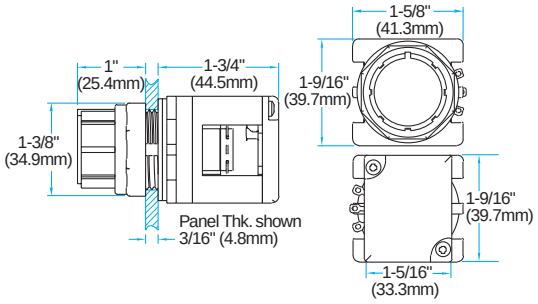

Potentiometer Operator (shown with Terminal Block)

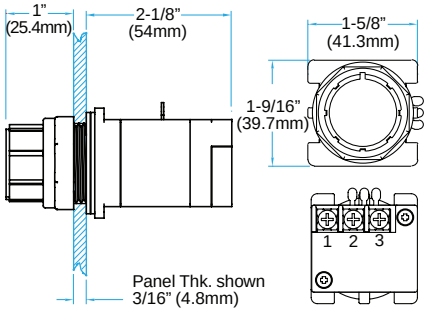

Wiring Diagram

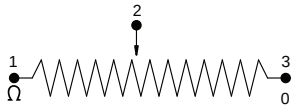

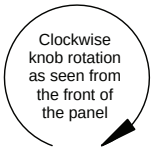

Measuring Between Terminals:

1 & 2 Decreasing Resistance (↓ Ω)

2 & 3 Increasing Resistance (↑ Ω)

2 is the common

CONTACT BLOCKS

Contact Block

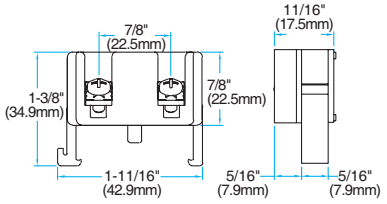

Contact Block (shown with IP20 Terminal Guard)

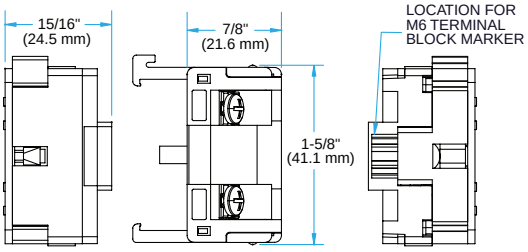

A600 (AC) Rating Designation:
A600 (7200 VA Make and 720 VA Break), 600V AC Maximum, Maximum Continuous Thermal Current, Ith: 10A

P300 (DC) Rating Designation:
P300 (138 VA Make and 138 VA Break), 250V DC Maximum, Maximum Continuous Thermal Current, Ith: 5A

CABLE PULL OPERATORS

Fully-assembled operators come standard with one 3/16" (4.8mm) and three 1/16" (1.6mm) gaskets.
See mounting gasket specifications chart #3 on page 42.

Push-Pull Maintained Cable Pull Operator

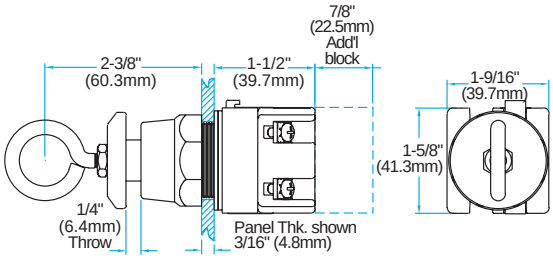

Momentary and Heavy Duty Cable Pull Operators

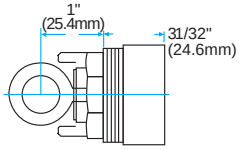

Momentary Booted Cable Pull Operator

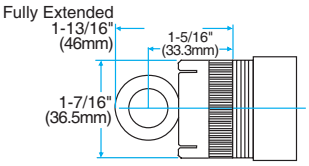

PILOT LIGHTS

Fully-assembled operators come standard with one 3/16" (4.8mm) and two 1/16" (1.6mm) gaskets.
See mounting gasket specifications chart #2 on page 42.

Full Voltage Pilot Light Operator (shown with PLL and IP20 Terminal Guard)

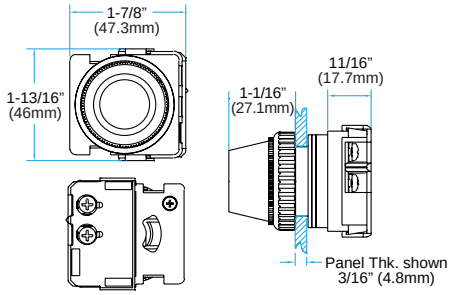

Resistor Pilot Light Operator (shown with PLL and IP20 Terminal Guard)

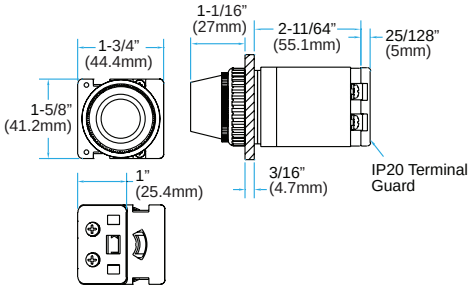

Dual Input Pilot Light Operator (shown with PLL)

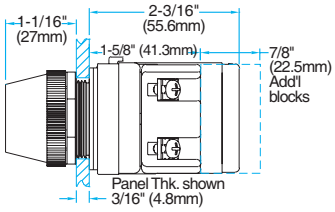

MULTI-VOLTAGE PILOT LIGHT

Fully-assembled operators come standard with four 1/16" (1.6mm) gaskets.
See mounting gasket specifications chart #2 on page 42.

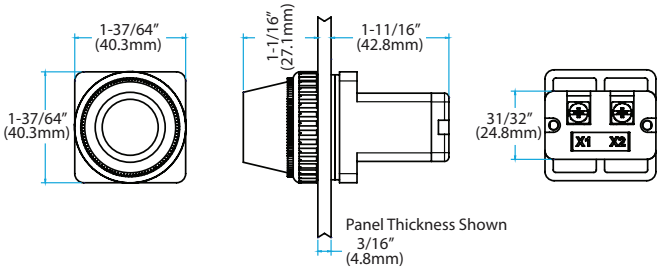

VISIT WWW.C3CONTROLS.COM TO DOWNLOAD CAD DRAWINGS

PUSH-TO-TEST PILOT LIGHTS

Fully-assembled operators come standard with one 3/16" (4.8mm) and three 1/16" (1.6mm) gaskets.
See mounting gasket specifications chart #1 on page 42.

Full Voltage & Resistor Push-To-Test Operators (shown with IPBC)

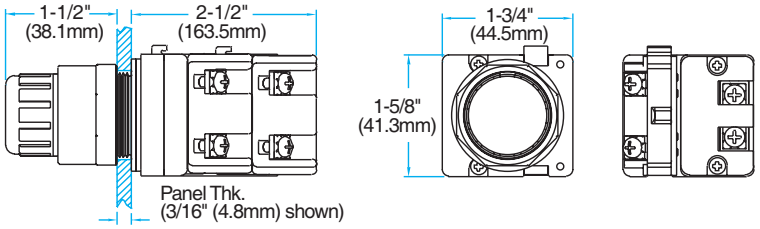

Full Voltage & Resistor Push-To-Test Operators (shown with IPBCM)

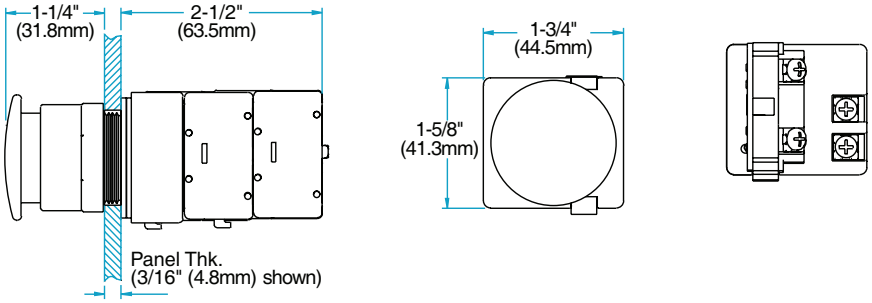

Guarded Lens

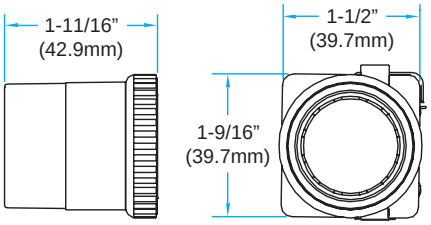

Shrouded Mushrooms Lens

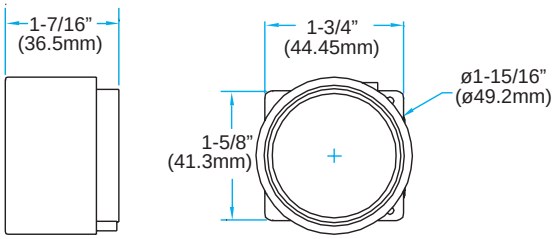

SELECTOR SWITCHES

Fully-assembled operators come standard with one 3/16" (4.8mm) and three 1/16" (1.6mm) gaskets.
See mounting gasket specifications chart #3 on page 42.

Selector Switch Operator (shown with standard handle)

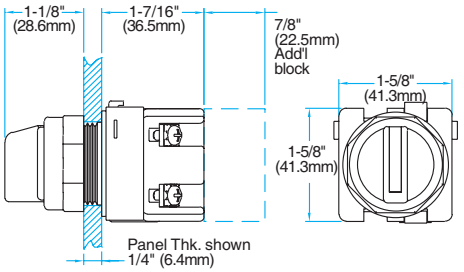

Selector Switch Lever Handle

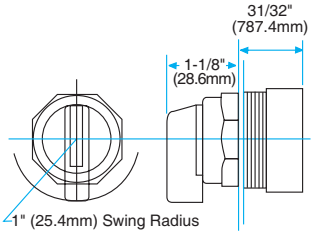

Keyed Selector Switch Operator

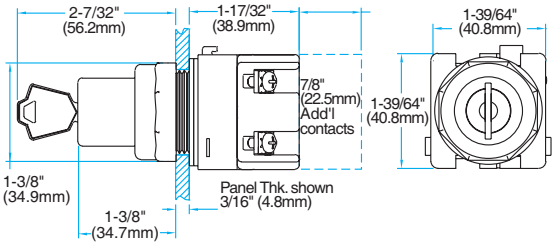

LOCK-OFF ATTACHMENT

LOAFC

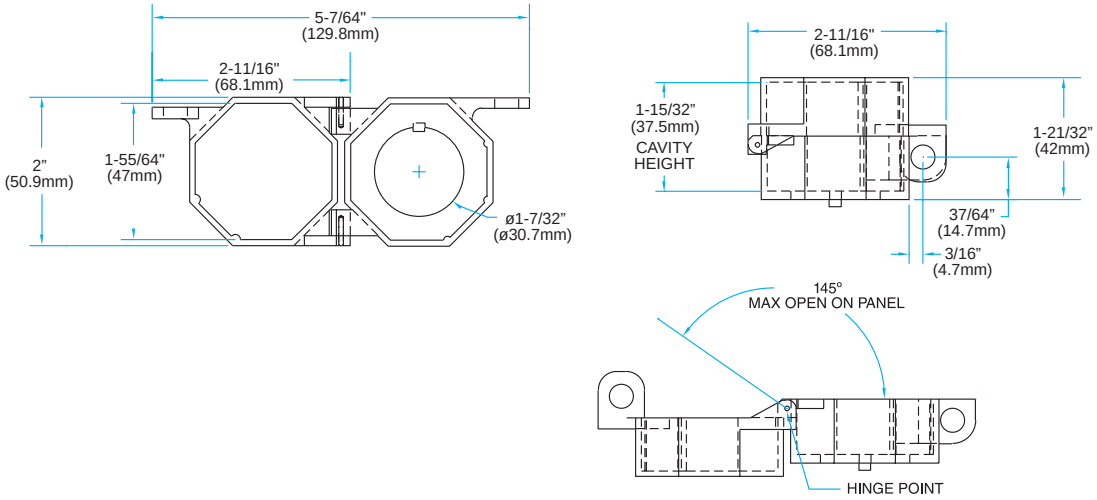

LOAM

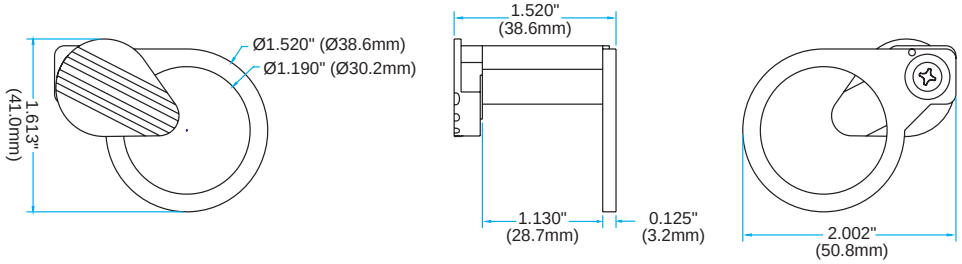

LOAP

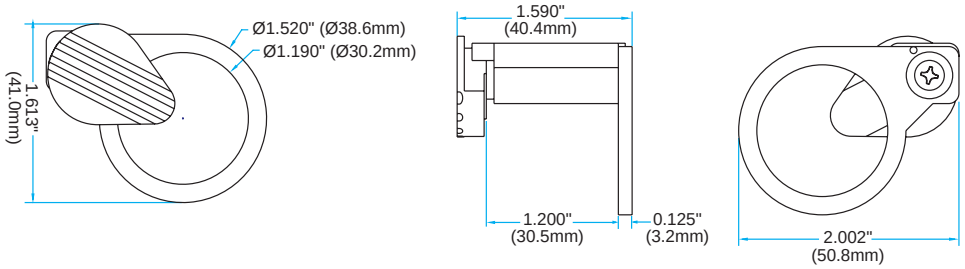

LOAX

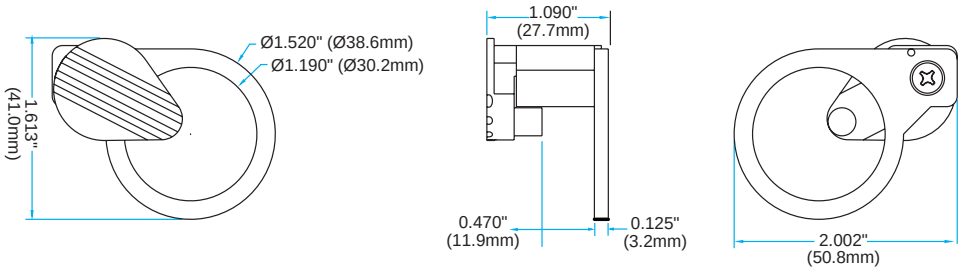

LEGEND PLATES

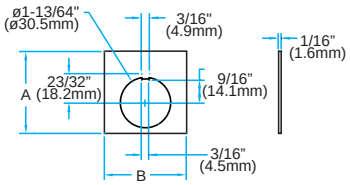

LP
Standard

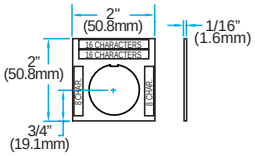

LPN
Narrow

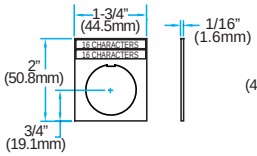

LPS
Short

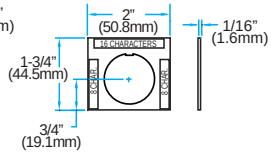

LPT
Tall

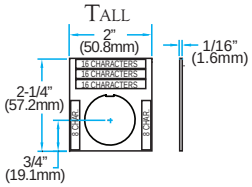

LP-40
Standard POTO

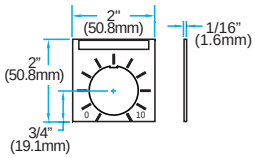

LP-43
Standard POTO

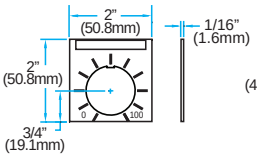

LPS-40
Short POTO

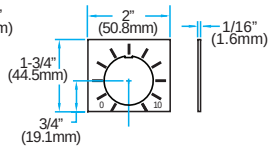

LPT-40
Tall POTO

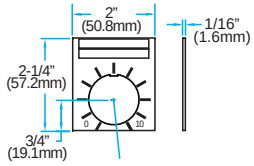

LPR
Standard Round

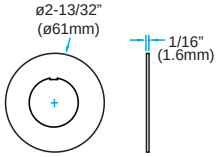

LPRM
Medium Round

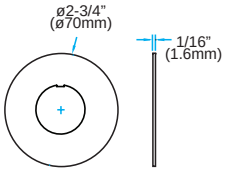

LPRJ
Jumbo Round

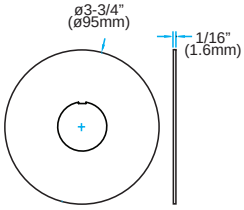

Note: Legend plates feature a tab for optional break-away positioning and can be used in conjunction with the Thrust & Trim Washer accessory.

MOUNTING GASKETS

MOUNTING GASKETS CHART #1

PANEL THICKNESS IN DECIMALS	# OF GASKETS NEEDED 3/16" (4.8MM)	& 1/16" (1.6MM)
less than .080	1	3
.080 – .132	1	2
.133 – .185	1	1
.186 – .238	0	3
.239 – .291	0	2
.292 – .344	0	1

NOTE: Remove one 1/16" (1.6mm) gasket when using a legend plate.

MOUNTING GASKETS CHART #2

PANEL THICKNESS IN DECIMALS	# OF GASKETS NEEDED 3/16" (4.8MM)	& 1/16" (1.6MM)
less than .080	1	2
.080 – .132	1	1
.133 – .185	0	3
.186 – .238	0	2
.239 – .291	0	1

NOTE: Remove one 1/16" (1.6mm) gasket when using a legend plate.

MOUNTING GASKETS CHART #3

PANEL THICKNESS IN DECIMALS	# OF GASKETS NEEDED 3/16" (4.8MM)	& 1/16" (1.6MM)
less than .080	1	5
.080 – .132	1	4
.133 – .185	1	3
.186 – .238	1	2
.239 – .291	1	1
.292 – .344	0	3

NOTE: Remove one 1/16" (1.6mm) gasket when using a legend plate.

MOUNTING HOLE PATTERN

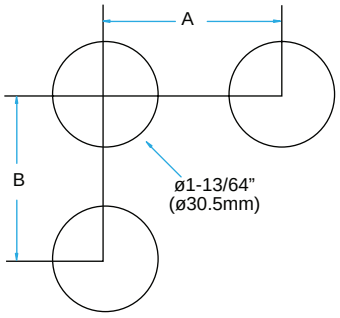

MOUNTING HOLE PATTERN

SPACING	A	B
Minimum	2" (50.8mm)	2" (50.8mm)
Standard	2-1/14" (57.2mm)	2-1/14" (57.2mm)

30MM HAZARDOUS DUTY PILOT DEVICES

series 30 hazardous

c3controls' 30mm H-Line Pilot Devices are designed for your most demanding hazardous duty applications. Specially engineered for Class 1, Division 2 and Zone 2, our 30mm H-Line offers a wide selection of hermetically sealed reed and factory sealed contact blocks, and each is made of an all-polyester construction with nickel-plated or stainless steel metal parts for superior corrosion resistance.

Section 14

Contact Blocks	4
Push Buttons	6
Pilot Lights	14
Selector Switches	20
Legend Plates	22
Accessories	24
Specifications	26
Dimensions	30

PROVEN

Conformity to Standards:

PILOT DEVICES

UL 508, 698, 1604, and 2279

CSA C22.2 No. 0, 14, 25, 30M, 157, and 213

IEC 60947-1, 60947-5-1

MULTI-VOLTAGE PILOT LIGHTS

UL 508, 1604

IEC 60947-1, 60947-5-1

Certifications:

UL File #: E157436 (Guide NOIV, NOIV2, NOIV7), E68568 (Guide NKCR, NKCR7)

CSA File #: LR47446

CE Marked (per EU Low Voltage Directive 2006/95/EC and RoHS Directive 2011/65/EU)

UL File #: E68568 (Guide NKCR, NKCR7), E157436 (Guide NOIV)

CE Marked (per EU Low Voltage Directive 2006/95/EC and RoHS Directive 2011/65/EU)

Visit www.c3controls.com to download product certifications.

NOTE: The scope (range, description, price, specifications, dimensions, etc.) of the product featured in this section is subject to change without notice. Refer to www.c3controls.com for product updates.

30MM HAZARDOUS DUTY PILOT DEVICES

Every product in our portfolio is designed and manufactured to meet the needs of the machine builder, including our comprehensive line of 30mm Hazardous Location Pilot Devices. Check out all the features of our Series 30 H-Line below!

LEADING THE INDUSTRY WITH OUR INNOVATIVE AND RUGGED DESIGN

✓ **Proven**	Our 30mm hazardous operators are UL Listed and CE Marked meeting global standards requirements.
✓ **Easy to Install**	Our contact blocks snap-on for secure assembly and are color coded for quick circuit identification.
✓ **Simple Customization**	Our light modules come with various lens color options for appropriate operator interface and are available in incandescent or our LED lamps with leakage protection.
✓ **Visible Certifications**	Our product certifications and electrical ratings are clearly marked on the outside of the contact blocks for easy reference during installation.
✓ **Heavy Duty**	Polyester construction provides superior durability, corrosion resistance, moisture rejection and electrical insulation. For added protection, metal parts are nickel-plated.
✓ **Convenient**	Reduce inventory with our interchangeable modular design, providing endless options for appropriate operator interface.
✓ **100% Reliability**	Hermetically sealed and factory sealed contact blocks are manufactured with all stainless steel hardware for use in harsh environments.
✓ **Added Security**	All 30mm hazardous location operators come with a screw-tightening mounting bracket to ensure contact blocks remain snug against operator.
✓ **Environmentally Secure**	With 4/4X and IP65 ratings, our 30mm line of pilot devices are built to last and withstand dust, corrosion, ice, and rain.
✓ **36-Month Warranty***	Every product is backed by our 36-Month Warranty—giving you confidence in the quality, reliability, and performance of components designed for the most demanding applications.
✓ **Guaranteed Same-Day Shipping***	Product availability reduces inventory, and improves cash-flow—saving you money. With c3controls any order for standard catalog items received by 6:00pm ET is guaranteed to ship same-day.
✓ **Advantage Pricing**	Our approach to product development, manufacturing, and focus on servicing the OEM and Electrical Equipment Builder reduces cost. The result—the best value in the industry.

*See c3controls Terms & Conditions

> "We were very pleased with the performance of c3controls' 30mm Hazardous Duty Pilot Devices, and by purchasing direct from the manufacturer, we have reduced costs without reducing quality."

Charlie Johnson, Applications Engineer • **ECI Industrial, LLC**

Momentary Push Button

Maintained Illuminated Push Button

Pilot Light

Selector Switch

UNIQUE PRODUCT LINE FEATURES

CLASS 1, DIVISION 2

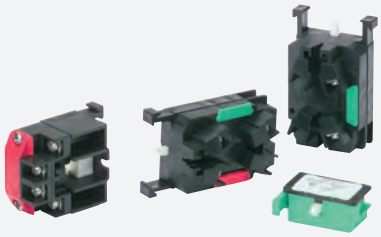

Leading the industry with the widest range of hermetically sealed reed and factory sealed contact blocks.

METAL ON THE INSIDE

c3controls 30mm Push-Twist-Release Emergency Stop devices feature a nickel-plated detent mechanism with stainless steel ball, and our Push-Pull operators contain a solid stainless steel detent mechanism. These features ensure reliable operation in emergency stop applications and provide safe interruption of circuits and longer life.

EXCLUSIVE MULTI-VOLTAGE LIGHTS

c3controls state-of-the-art multi-voltage light modules—the only U.S. engineered multi-voltage light in the industry!—operate at any voltage from 20V to 277V AC or DC without losing intensity.

U-CUP SEAL

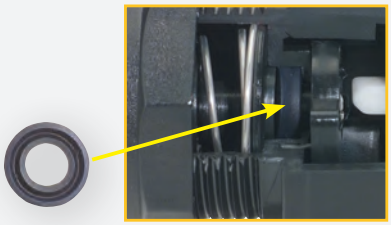

Our revolutionary U-Cup seal is infused with a Teflon coating to eliminate cracking when exposed to harsh conditions and keeps water, oils, and dust away from the contact blocks.

ONE CAM DESIGN

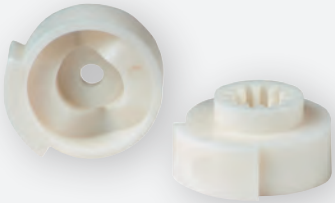

Our single cam design eliminates the need for multiple cam and selector switch configurations, reducing inventory and saves you labor time and costs.

INTERNAL SELF-LUBRICANT

All frictional parts are molded with an internal self-lubricant to provide outstanding wear without troublesome greases used by others.

FIND IT FAST

30mm Hazardous Duty Pilot Devices

- Certifications
- Specifications
- Dimension Drawings
- Installation Instructions
- Easy to Buy

www.c3controls.com

Hermetically Sealed Features

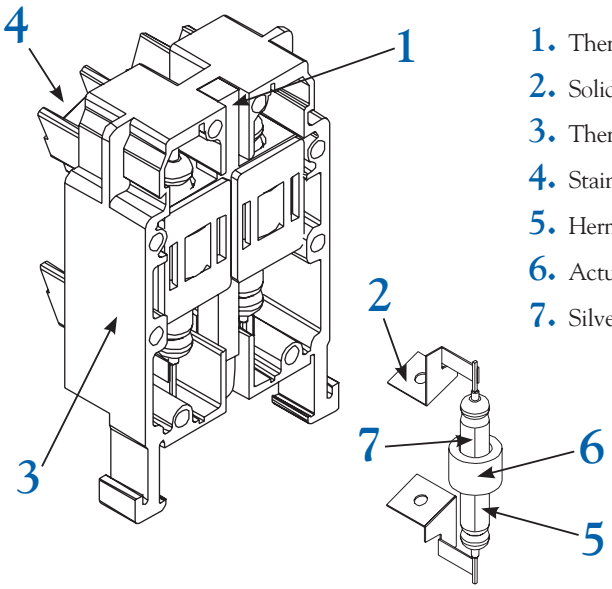

1. Thermoplastic Stroker
2. Solid Brass Bus Connection
3. Thermoplastic Polyester Body
4. Stainless Steel Terminal Screw
5. Hermetically Sealed Glass Chamber
6. Actuator Magnet
7. Silver Alloy Contacts

- Logic Reeds are great for low power levels (resistive loads only), especially PLC inputs.
- Power Reeds are hermetically sealed, which is excellent for harsh environments and for 100% reliable operations.

HERMETICALLY SEALED POWER REED CONTACT BLOCK CONFIGURATION - (360 VA INDUCTIVE)

CODE	CONTACT SYMBOL	DESCRIPTION	COLOR	LIST
PRNO		1 Normally Open Contact Block	Green	$ 74.00
PRNC		1 Normally Closed Contact Block	Red	$ 74.00
PR2NO		2 Normally Open Contact Blocks	Green/ Green	$118.00
PR2NC		2 Normally Closed Contact Blocks	Red/Red	$118.00
PRNONC		1 Normally Open and 1 Normally Closed Contact Blocks	Green/ Red	$118.00

*Class 1, Division 2 (Groups A,B,C,D) - Zone 2 (Groups IIC) Rated B300, 240V AC, 5 Amps (Thermal) Continuous, 3600 VA Make, 360 VA Break (AC), C600 AC, Q300 DC, 250V DC, 69 VA Make and Break (DC).

*NOTE: Circuits are electrically isolated. However, the Normally Open (NO) contact may make circuit before the Normally Closed (NC) contact opens.

HERMETICALLY SEALED MID-POWER REED CONTACT BLOCK CONFIGURATION - (180 VA INDUCTIVE)

CODE	CONTACT SYMBOL	DESCRIPTION	COLOR	LIST
MPRNO		1 Normally Open Contact Block	Green	$ 59.00
MPRNC		1 Normally Closed Contact Block	Red	$ 59.00
MPR2NO		2 Normally Open Contact Blocks	Green/ Green	$102.00
MPR2NC		2 Normally Closed Contact Blocks	Red/ Red	$102.00
MPRNONC		1 Normally Open and 1 Normally Closed Contact Blocks	Green/ Red	$102.00

*Class 1, Division 2 (Groups A,B,C,D) - Zone 2 Gr. IIC Mid-Power Reed MPRNO Series C300 AC, 240V AC Max., 2.5 Amps Continuous Thermal, 1800 VA (Make) 180 VA (Break), Q150 DC, 69 VA Make and Break, 125V DC Max., 2.5 Amps Continuous Thermal.

*NOTE: Circuits are electrically isolated. However, the Normally Open (NO) contact may make circuit before the Normally Closed (NC) contact opens.

HERMETICALLY SEALED MEDIUM LOGIC REED CONTACT BLOCK CONFIGURATION - (40 VA INDUCTIVE, 100 WATTS RESISTIVE)

CODE	CONTACT SYMBOL	DESCRIPTION	COLOR	LIST
MLRNO		1 Normally Open Contact Block	Green	$ 35.00
MLRNC		1 Normally Closed Contact Block	Red	$ 35.00
MLR2NO		2 Normally Open Contact Blocks	Green/ Green	$ 55.00
MLR2NC		2 Normally Closed Contact Blocks	Red/ Red	$ 55.00
MLRNONC		1 Normally Open and 1 Normally Closed Contact Blocks	Green/ Red	$ 55.00

*Class 1, Division 2 - (Groups A,B,C,D) Zone 2 Gr. IIC Medium Logic Reed Blocks are Rated 250V, 3.0 Amps Max. (Thermal), 40 VA Inductive Max., 100 Watts Resistive Max.

*NOTE: Circuits are electrically isolated. However, the Normally Open (NO) contact may make circuit before the Normally Closed (NC) contact opens.

HERMETICALLY SEALED LOGIC REED CONTACT BLOCK CONFIGURATION - (40 WATTS RESISTIVE)

CODE	CONTACT SYMBOL	DESCRIPTION	COLOR	LIST
LRNO		1 Normally Open Contact Block	Green	$ 22.00
LRNC		1 Normally Closed Contact Block	Red	$ 22.00

Class 1, Division 2 - (Groups A,B,C,D) Zone 2 Gr. IIC Logic Reed Blocks are Rated 220V Max., 2 Amps Max. (Thermal), 40 Watts Resistive Max.

DISCOUNT SCHEDULE E

30mm H-Line Contact Blocks

Our H-Line Contact Blocks feature convenient snap-on secured assembly, saving valuable time and money. For added security, all H-Line operators come standard with a screw-tightening mounting bracket to ensure the contact blocks remain snug to the operator. The hermetically sealed and factory sealed contact blocks are manufactured with all stainless steel hardware, which is excellent for harsh environments and for 100% reliability. We also offer ordinary location contact blocks, please refer to Section 13 Pages 4 & 5.
Note: Hermetically and factory sealed contact blocks cannot be assembled stacked from the factory.

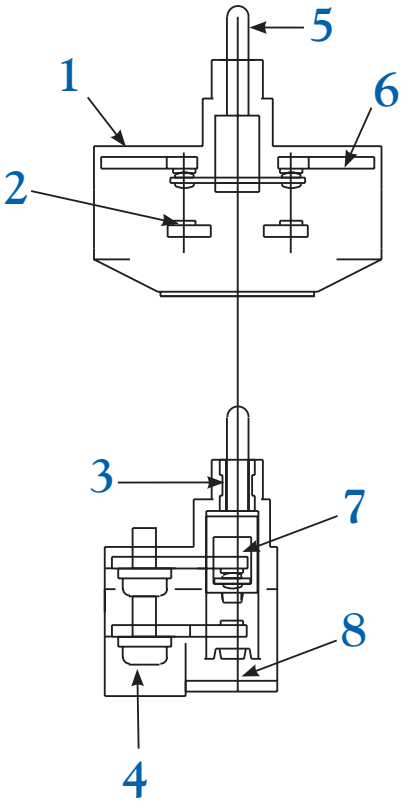

Factory Sealed Features

1. Glass Reinforced Thermoplastic Body
2. Fine Silver Contacts
3. Stainless Steel Bushing
4. Stainless Steel Terminal Screw
5. Stainless Steel Shaft
6. Nickel-Plated Terminals
7. Stainless Steel Overtravel Spring
8. Stainless Steel Kickout Spring

FACTORY SEALED CONTACT BLOCK CONFIGURATION (720 VA)

CODE	CONTACT SYMBOL	DESCRIPTION	LIST
CBFS		1 Normally Open and 1 Normally Closed Contact Blocks (to be used with linear devices)	$ 94.00
CBFSR		1 Normally Open and 1 Normally Closed Contact Blocks (to be used with rotary selector devices)	$ 94.00

Class 1, Division 2 (Groups B,C,D) T6 (85°C) - Zone 2 Gr. IIB+H2, A600 Rating Designation, 10A Continuous @ 600V AC (Thermal), 7200 VA (Make), 720 VA (Break). P300 DC, 250V DC Max., 138 VA Make and Break.

DISCOUNT SCHEDULE **E**

Available Contact Blocks for H-Line Locations

Factory Sealed for Linear Devices

Factory Sealed For Rotary Devices

Power Reed

Mid-Power Reed

Medium Logic Reed

Logic Reed

IT'S EASY TO BUILD YOUR OWN PUSH BUTTON

Simply pick the code number from each of the sections below and combine them to build your part number.

Momentary Push Buttons (Non-Illuminated)

_____ – _____ _____ _____ – _____ / _____

I II III IV V VI

Example: To build one of our most popular Push Buttons, the part number would be I + II + III + IV + V + VI or HPBO-FCGN-PRNO

I. OPERATOR TYPE

CODE	DESCRIPTION	LIST
	FOR USE WITH MOST CONTACT BLOCK TYPES (EXCLUDES LOGIC REEDS LRNO & LRNC)	
HPBO	Push Button Operator w/bracket	$ 20.00
	FOR USE WITH LOGIC REED CONTACT BLOCKS LRNO & LRNC	
PBO	Push Button Operator	$ 18.00

II. CLAMP RING

CODE	DESCRIPTION	LIST
	FOR USE WITH MOST CAP TYPES (EXCLUDES RUBBER BOOTS)	
(Blank)	Black Polyester (Type 4X)	—
A	Aluminum (Type 4)*	$ 4.30
	FOR USE WITH RUBBER BOOTS	
(Blank)	Clamp Ring Included**	—

*NOTE: Aluminum clamp rings are NOT corrosion resistant and are NOT an option for SMC or SJC cap types.

**NOTE: Rubber boots come standard with a built in clamp ring and thrust washer. When installing the operator we recommend that the thrust washer be placed behind the panel to prevent rotation.

DISCOUNT SCHEDULE E

III. CAP TYPE

CODE	DESCRIPTION	LIST
(Blank)	Operator Less Cap	—
FC	Flush	$ 5.20
GFC	Guarded Flush	$ 12.00
XC	Extended	$ 5.20
GXC	Guarded Extended	$ 12.00
MC	Mushroom	$ 17.00
JMC	Jumbo Mushroom	$ 22.00
SMC	Shrouded Mushroom*	$ 26.00
SJC	Shrouded Jumbo Mushroom*	$ 30.00
HRB	Fluorosilicone Rubber Boot‡	$ 39.00

*NOTE: Aluminum clamp rings are NOT an option for SMC or SJC.

‡NOTE: Rubber boots come standard with a built in clamp ring and thrust washer. When installing the operator we recommend that the thrust washer be placed behind the panel to prevent rotation.

IV. CAP COLOR

CODE	DESCRIPTION
	MOST CAP TYPES (EXCLUDES RUBBER BOOTS)
(Blank)	Operator less Cap
BK	Black
BE	Blue
GN	Green
GY	Grey
RD	Red
WE	White
YW	Yellow
	RUBBER BOOTS
BK	Black
GN	Green
RD	Red
YW	Yellow

V. CONTACT BLOCK CONFIGURATION (LEFT SIDE)

CODE	DESCRIPTION	LIST
	FACTORY SEALED, CLASS 1, DIV. 2/ZONE 2, 720 VA	
(Blank)	Operator without Contact Blocks	—
CBFS	Contact Block with 1 Normally Open/1 Normally Closed	$ 94.00
	POWER REED, CLASS 1, DIV. 2/ZONE 2, 360 VA INDUCTIVE	
(Blank)	Operator without Contact Blocks	—
PRNO	1 Normally Open Contact Block	$ 74.00
PRNC	1 Normally Closed Contact Block	$ 74.00
PR2NO	Contact Block w/2 Normally Open	$118.00
PR2NC	Contact Block w/2 Normally Closed	$118.00
PRNONC	Contact Block with 1 Normally Open/1 Normally Closed	$118.00
	MID-POWER REED, CLASS 1, DIV. 2/ZONE 2, 180 VA INDUCTIVE	
(Blank)	Operator without Contact Blocks	—
MPRNO	1 Normally Open Contact Block	$ 59.00
MPRNC	1 Normally Closed Contact Block	$ 59.00
MPR2NO	Contact Block w/2 Normally Open	$102.00
MPR2NC	Contact Block w/2 Normally Closed	$102.00
MPRNONC	Contact Block with 1 Normally Open/1 Normally Closed	$102.00
	MEDIUM LOGIC REED, CLASS 1, DIV. 2/ZONE 2, 40 VA INDUCTIVE, 100 WATTS RESISTIVE	
(Blank)	Operator without Contact Blocks	—
MLRNO	1 Normally Open Contact Block	$ 35.00
MLRNC	1 Normally Closed Contact Block	$ 35.00
MLR2NO	Contact Block w/2 Normally Open	$ 55.00
MLR2NC	Contact Block w/2 Normally Closed	$ 55.00
MLRNONC	Contact Block with 1 Normally Open/1 Normally Closed	$ 55.00
	LOGIC REED, CLASS 1, DIV. 2/ZONE 2, 40 WATTS RESISTIVE*	
(Blank)	Operator without Contact Blocks	—
LRNO	1 Normally Open Contact Block	$ 22.00
LRNC	1 Normally Closed Contact Block	$ 22.00

*NOTE: Logic Reeds do not require and are not provided with a Mounting Screw and must be used with a PBO operator.

VI. CONTACT BLOCK CONFIGURATION (RIGHT SIDE)

(USE CHART V. FROM ABOVE)

***LEGEND PLATES** in almost any size & color are available for same day shipping. See pages 22 & 23 for complete selection.*

30mm H-Line Momentary Non-Illuminated Push Buttons

c3controls goes the extra step to make sure that our products outlast the competition. Our 30mm H-Line Momentary Non-Illuminated Push Buttons are durable and flexible for a variety of uses, and all metal parts are nickel-plated for superior corrosion resistance. All c3controls 30mm H-Line operators are UL Listed and are rated Type 4/4X standard for watertight and corrosion resistance. In addition, operators are also listed for Type 1, 2, 3, 3R, 12 and 13, and meet global standards requirements.

Product features include:

- Polyester construction for superior corrosion resistance, moisture rejection and electrical insulation.
- Our 30mm H-Line operators come standard with a polyester clamp ring, although optional aluminum clamp rings are available.
- #6 stainless steel terminal screws with self-lifting captive wire clamps accommodate #22 through two #12 AWG wires (0.5 - 4mm^2) per terminal.
- Operators conveniently mount in a round 1-13/64" (30.5mm) hole that is directly interchangeable with competitors units and eliminates the labor required for notching.

UNIQUE PRODUCT FEATURES

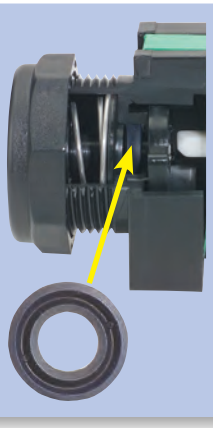

1. Our revolutionary U-Cup seal is infused with a Teflon coating to eliminate cracking when exposed to harsh conditions such as heat, dryness and sunlight. The U-Cup seal rides easily along the stroker and keeps water, oils, dust and other corrosive particles in the air away from the contact blocks. This U-cup seal also acts like a squeegee and forms a permanent watertight seal that meets Type 4/4X with or without a rubber boot. *In fact, our push button was the first to be rated Type 4X without using a rubber boot!*
2. Our push buttons modular design provides endless options for appropriate operator interface by alternating cap types and colors which ultimately will save you time and money by reducing your inventory.

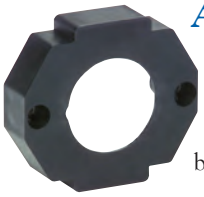

Added Security!

For added security, all H-Line Push Buttons come standard with a screw tightening mounting bracket to ensure the contact blocks remain snug to the operator.

Some of Our Popular Configurations:

MOMENTARY NON-ILLUMINATED PUSH BUTTON OPERATORS WITH POLYESTER CLAMP RING (TYPE 4X)

	FLUSH CAP		EXTENDED CAP	
CAP COLOR	CATALOG NUMBER	LIST	CATALOG NUMBER	LIST
Green	HPBO-FCGN-PRNO	$ 99.20	HPBO-XCGN-PRNO	$ 99.20
Red	HPBO-FCRD-PRNC	$ 99.20	HPBO-XCRD-PRNC	$ 99.20
Green	HPBO-FCGN-CBFS	$119.20	HPBO-XCGN-CBFS	$119.20
Red	HPBO-FCRD-CBFS	$119.20	HPBO-XCRD-CBFS	$119.20

Mix and Match Any Color and Momentary Non-Illuminated Push Button Cap

Flush Cap | Guarded Flush Cap | Extended Cap | Guarded Extended Cap | Mushroom Cap (1-1/2" (38mm) dia.) | Jumbo Mushroom Cap (2-1/4" (57mm) dia.) | Shrouded Mushroom Cap (1-1/2" (38mm) dia.) | Shrouded Jumbo Mushroom Cap (2-1/4" (57mm) dia.) | Rubber Boot

IT'S EASY TO BUILD YOUR OWN PUSH BUTTON

Simply pick the code number from each of the sections below and combine them to build your part number.

DISCOUNT SCHEDULE E

Maintained Push Buttons (Non-Illuminated)
2-Position Push-Twist Release

_____ – _____ TMC _____ – _____ / _____
I II III IV V VI

Example: To build one of our most popular Push Buttons, the part number would be I + II + TMC + IV + V + VI or HPTR-TMCRD-CBFS

I. OPERATOR TYPE

CODE	DESCRIPTION	LIST
	FOR USE WITH MOST CONTACT BLOCK TYPES (EXCLUDES LOGIC REEDS LRNO & LRNC)	
HPTR	Push-Twist Release w/bracket	$ 67.00
	FOR USE WITH LOGIC REED CONTACT BLOCKS LRNO & LRNC	
PTR	Push-Twist Release	$ 65.00

II. CLAMP RING

CODE	DESCRIPTION	LIST
(Blank)	Black Polyester (Type 4X)	—
Y	Yellow Polyester (Type 4X)	$ 4.30
A	Aluminum (Type 4)*	$ 4.30

*NOTE: Aluminum clamp rings are NOT corrosion resistant.

III. CAP TYPE

CODE	DESCRIPTION	LIST
TMC	Twist Mushroom	$ 17.00

IV. CAP COLOR

CODE	COLOR
BK	Black
BE	Blue
GN	Green
GY	Grey
RD	Red
WE	White
YW	Yellow

The linear push-off twist to release style operator requires a "twist" for the "out" or "on" position and a linear "push" for the "in" or "off" position. The twist mushroom cap is marked with arrows identifying the direction for the twist release.

V. CONTACT BLOCK CONFIGURATION (LEFT SIDE)

CODE	DESCRIPTION	LIST
	FACTORY SEALED, CLASS 1, DIV. 2/ZONE 2, 720 VA	
(Blank)	Operator without Contact Blocks	—
CBFS	Contact Block with 1 Normally Open/1 Normally Closed	$ 94.00
	POWER REED, CLASS 1, DIV. 2/ZONE 2, 360 VA INDUCTIVE	
(Blank)	Operator without Contact Blocks	—
PRNO	1 Normally Open Contact Block	$ 74.00
PRNC	1 Normally Closed Contact Block	$ 74.00
PR2NO	Contact Block w/2 Normally Open	$118.00
PR2NC	Contact Block w/2 Normally Closed	$118.00
PRNONC	Contact Block with 1 Normally Open/1 Normally Closed	$118.00
	MID-POWER REED, CLASS 1, DIV. 2/ZONE 2, 180 VA INDUCTIVE	
(Blank)	Operator without Contact Blocks	—
MPRNO	1 Normally Open Contact Block	$ 59.00
MPRNC	1 Normally Closed Contact Block	$ 59.00
MPR2NO	Contact Block w/2 Normally Open	$102.00
MPR2NC	Contact Block w/2 Normally Closed	$102.00
MPRNONC	Contact Block with 1 Normally Open/1 Normally Closed	$102.00
	MEDIUM LOGIC REED, CLASS 1, DIV. 2/ZONE 2, 40 VA INDUCTIVE, 100 WATTS RESISTIVE	
(Blank)	Operator without Contact Blocks	—
MLRNO	1 Normally Open Contact Block	$ 35.00
MLRNC	1 Normally Closed Contact Block	$ 35.00
MLR2NO	Contact Block w/2 Normally Open	$ 55.00
MLR2NC	Contact Block w/2 Normally Closed	$ 55.00
MLRNONC	Contact Block with 1 Normally Open/1 Normally Closed	$ 55.00
	LOGIC REED, CLASS 1, DIV. 2/ZONE 2, 40 WATTS RESISTIVE*	
(Blank)	Operator without Contact Blocks	—
LRNO	1 Normally Open Contact Block	$ 22.00
LRNC	1 Normally Closed Contact Block	$ 22.00

*NOTE: Logic Reeds do not require and are not provided with a Mounting Screw and must be used with either a PTR or PBO operator.

VI. CONTACT BLOCK CONFIGURATION (RIGHT SIDE)

(USE CHART V FROM ABOVE)

IT'S EASY TO BUILD YOUR OWN PUSH BUTTON

Maintained Push Buttons (Non-Illuminated) 2-Position Push-Pull

_____ – _____ _____ _____ _____ – _____ / _____
I II III IV V VI VII

Example: To build one of our most popular Push Buttons, the part number would be I + II + III + IV + V + VI + VII or HPBO-HPPMCRD-PRNONC

I. OPERATOR TYPE

CODE	DESCRIPTION	LIST
	FOR USE WITH MOST CONTACT BLOCK TYPES (EXCLUDES LOGIC REEDS LRNO & LRNC)	
HPBO	Push Button Operator w/bracket	$ 20.00
	FOR USE WITH LOGIC REED CONTACT BLOCKS LRNO & LRNC	
PBO	Push Button Operator	$ 18.00

II. CLAMP RING

CODE	DESCRIPTION	LIST
(Blank)	Black Polyester (Type 4X)	—
Y	Yellow Polyester (Type 4X)	$ 4.30
A	Aluminum (Type 4)*	$ 4.30

*NOTE: Aluminum clamp rings are NOT corrosion resistant.

III. CAP FUNCTION

CODE	DESCRIPTION	LIST
HPP	Stainless Steel Push-Pull Maint.	$ 89.00
PP	Brass Push-Pull Maint.	$ 57.00

IV. CAP TYPE

CODE	DESCRIPTION	LIST
MC	Mushroom	—
JMC	Jumbo Mushroom	$ 8.60

The 2-Position Push-Pull is maintained in both the push and pull positions. The primary application is "push" to "stop" and "pull" to "start".

DISCOUNT SCHEDULE E

V. CAP COLOR

CODE	COLOR
BK	Black
BE	Blue
GN	Green
GY	Grey
RD	Red
WE	White
YW	Yellow

VI. CONTACT BLOCK CONFIGURATION (LEFT SIDE)

(USE CHART V FROM ABOVE)

VII. CONTACT BLOCK CONFIGURATION (RIGHT SIDE)

(USE CHART V FROM ABOVE)

30mm H-Line Maintained Non-Illuminated Push Buttons

The most rugged Emergency Stop Available in the Industry!

The 30mm H-Line of maintained non-illuminated push buttons feature all polyester construction and all metal parts are nickel-plated or stainless steel for superior corrosion resistance; #6 stainless steel terminal screws have self-lifting captive wire clamps to accommodate #22 through two #12 AWG wires (0.5 - 4mm^2) per terminal. Units mount in a round 1-13/64" (30.5mm) hole and are directly interchangeable with competitors units. Operators are UL Listed and are rated Type 4/4X standard for watertight and corrosion resistance. In addition, operators are also listed for Type 1, 2, 3, 3R, 12 and 13, and meet global standards requirements.

Some of Our Popular Configurations:

2-POSITION PUSH-TWIST RELEASE OPERATORS MAINTAINED IN/MAINTAINED OUT

	POWER REED CONTACT BLOCK 2 CIRCUIT (1 NO/1 NC)				FACTORY SEALED CONTACT BLOCK 2 CIRCUIT (1 NO/1 NC)			
O = OPEN X = CLOSED								
		OUT	IN			OUT	IN	
	NC	X	O		NC	X	O	
	NO	O	X		NO	O	X	
CAP COLOR	CATALOG NUMBER			LIST	CATALOG NUMBER			LIST
Black	HPTR-TMCBK-PRNONC			$202.00	HPTR-TMCBK-CBFS			$178.00
Green	HPTR-TMCGN-PRNONC			$202.00	HPTR-TMCGN-CBFS			$178.00
Red	HPTR-TMCRD-PRNONC			$202.00	HPTR-TMCRD-CBFS			$178.00
Yellow	HPTR-TMCYW-PRNONC			$202.00	HPTR-TMCYW-CBFS			$178.00

2-POSITION PUSH-PULL MAINTAINED OPERATORS MAINTAINED IN/MAINTAINED OUT

	POWER REED CONTACT BLOCK 2 CIRCUIT (1 NO/1 NC)				FACTORY SEALED CONTACT BLOCK 2 CIRCUIT (1 NO/1 NC)			
O = OPEN X = CLOSED								
		OUT	IN			OUT	IN	
	NC	X	O		NC	X	O	
	NO	O	X		NO	O	X	
CAP COLOR	CATALOG NUMBER			LIST	CATALOG NUMBER			LIST
Black	HPBO-HPPMCBK-PRNONC			$227.00	HPBO-HPPMCBK-CBFS			$203.00
Green	HPBO-HPPMCGN-PRNONC			$227.00	HPBO-HPPMCGN-CBFS			$203.00
Red	HPBO-HPPMCRD-PRNONC			$227.00	HPBO-HPPMCRD-CBFS			$203.00
Yellow	HPBO-HPPMCYW-PRNONC			$227.00	HPBO-HPPMCYW-CBFS			$203.00

UNIQUE FEATURES

We Put The Metal On The Inside — Where It Counts!

Our push-twist operator features a nickel-plated detent mechanism with stainless steel ball while our push-pull operator contains a solid stainless steel detent mechanism. These are the best-engineered, most reliable heavy-duty emergency stop buttons in the world. This rugged design, which comes standard with a polyester clamp ring or optional aluminum clamp ring, ensures reliable operation in emergency applications, providing safe interruption of circuits, and much longer life when compared to any competitor's product.

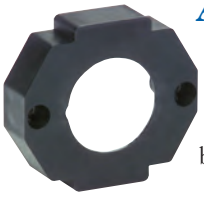

Added Security!

For added security, all H-Line Push Buttons come standard with a screw tightening mounting bracket to ensure the contact blocks remain snug to the operator.

Available Cap Colors for 2-Position Maintained Non-Illuminated Push Buttons

Twist Mushroom Cap (1-1/2" (38mm) dia.) — Mushroom Cap (1-1/2" (38mm) dia.) — Jumbo Mushroom Cap (2-1/4" (57mm) dia.)

IT'S EASY TO BUILD YOUR OWN PUSH BUTTON

Simply pick the code number from each of the sections below and combine them to build your part number.

Momentary Push Buttons (Illuminated)*

_____ _____ _____ – _____ _____ _____ – _____

I II III IV V VI VII

Example: To build one of our most popular Push Buttons, the part number would be I + II + III + IV + V + VI + VII or **HFVLU120-HIPBCGN-PRNO**

*NOTE: Our momentary illuminated push buttons must be ordered as an assembled part. Contact blocks may be ordered separately.

I. ILLUMINATED PUSH BUTTON OPERATOR

CODE	DESCRIPTION	LIST
HFVLU	Full Voltage	$ 64.00
HRLU	Resistor	$ 64.00
HRTLU	Dual Input Remote Test	$100.00

II. VOLTAGE BASED ON OPERATOR TYPE

CODE	DESCRIPTION
	FULL VOLTAGE
6	6V AC/DC‡
12	12V AC/DC
24	24V AC/DC
120	120V AC/DC
	RESISTOR
120	120V AC/DC
240	240V AC/DC
480	480V AC/DC (LED only)
	DUAL INPUT REMOTE TEST
6	6V AC/DC‡
12	12V AC/DC
24	24V AC/DC
120	120V AC/DC

NOTE: Products marked with ‡ are not available for same-day shipping. Contact our Customer First Team for lead times and minimum order quantities.

III. LAMP TYPE/COLOR

CODE	COLOR	LIST
	LED	
LA	Amber	$ 18.00
LB	Blue	$ 18.00
LG	Green	$ 18.00
LR	Red	$ 18.00
LW	White	$ 18.00
	INCANDESCENT	
(Blank)	Clear NOTE: Incandescent bulbs are not an option for HRLU480.	—
NL	**No Lamp**	– $ 1.80

IV. CLAMP RING

CODE	DESCRIPTION	LIST
(Blank)	Black Polyester (Type 4X)	—
A	Aluminum (Type 4)*	$ 4.30

*NOTE: Aluminum clamp rings are NOT corrosion resistant.

V. LENS TYPE

CODE	DESCRIPTION	LIST
	FOR USE WITH MOST CONTACT BLOCK TYPES (EXCLUDES LOGIC REEDS LRNO & LRNC)	
HIPBC	Illuminated Push Button Lens	$ 24.00
HIPBCM	Illuminated Push Button Mushroom Lens	$ 36.00
HGIPBC	Guarded Illuminated Push Button Lens*	$ 36.00
HSIPBCM	Shrouded Illuminated Push Button Mushroom Lens*	$ 48.00
	FOR USE WITH LOGIC REED CONTACT BLOCKS LRNO & LRNC	
IPBC	Illuminated Push Button Lens	$ 24.00
IPBCM	Illuminated Push Button Mushroom Lens	$ 36.00
GIPBC	Guarded Illuminated Push Button Lens*	$ 36.00
SIPBCM	Shrouded Illuminated Push Button Mushroom Lens*	$ 48.00

*NOTE: Aluminum clamp rings are not an option for HGIPBC, HSIPBCM, GIPBC or SIPBCM.

DUAL INPUT REMOTE TEST

Our unique Dual Input Remote light unit can be used as an illuminated push button while also permitting the testing of a number of lights from a single push button. A diode circuit isolates the test supply from the normal supply. The schematic shown represents a typical dual input application.

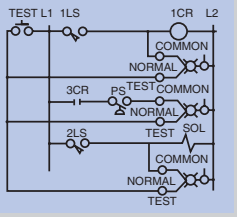

DISCOUNT SCHEDULE E

VI. LENS COLOR

CODE	COLOR
AR	Amber
BE	Blue
CR	Clear
GN	Green
RD	Red
WE	White
YW	Yellow

VII. CONTACT BLOCK CONFIGURATION

CODE	DESCRIPTION	LIST
	FACTORY SEALED, CLASS 1, DIV. 2/ZONE 2, 720 VA	
(Blank)	Operator without Contact Blocks	—
CBFS	Contact Block with 1 Normally Open/1 Normally Closed	$ 94.00
	POWER REED, CLASS 1, DIV. 2/ZONE 2, 360 VA INDUCTIVE	
(Blank)	Operator without Contact Blocks	—
PRNO	1 Normally Open Contact Block	$ 74.00
PRNC	1 Normally Closed Contact Block	$ 74.00
PR2NO	Contact Block w/2 Normally Open	$118.00
PR2NC	Contact Block w/2 Normally Closed	$118.00
PRNONC	Contact Block with 1 Normally Open/1 Normally Closed	$118.00
	MID-POWER REED, CLASS 1, DIV. 2/ZONE 2, 180 VA INDUCTIVE	
(Blank)	Operator without Contact Blocks	—
MPRNO	1 Normally Open Contact Block	$ 59.00
MPRNC	1 Normally Closed Contact Block	$ 59.00
MPR2NO	Contact Block w/2 Normally Open	$102.00
MPR2NC	Contact Block w/2 Normally Closed	$102.00
MPRNONC	Contact Block with 1 Normally Open/1 Normally Closed	$102.00
	MEDIUM LOGIC REED, CLASS 1, DIV. 2/ZONE 2, 40 VA INDUCTIVE, 100 WATTS RESISTIVE	
(Blank)	Operator without Contact Blocks	—
MLRNO	1 Normally Open Contact Block	$ 35.00
MLRNC	1 Normally Closed Contact Block	$ 35.00
MLR2NO	Contact Block w/2 Normally Open	$ 55.00
MLR2NC	Contact Block w/2 Normally Closed	$ 55.00
MLRNONC	Contact Block with 1 Normally Open/1 Normally Closed	$ 55.00
	LOGIC REED, CLASS 1, DIV. 2/ZONE 2, 40 WATTS RESISTIVE*	
(Blank)	Operator without Contact Blocks	—
LRNO	1 Normally Open Contact Block	$ 22.00
LRNC	1 Normally Closed Contact Block	$ 22.00

*NOTE: Logic Reeds do not require and are not provided with a Mounting Screw.

30mm H-Line Momentary Illuminated Push Buttons

c3controls 30mm H-Line Momentary Illuminated Push Buttons are durable and flexible for a variety of uses, and all metal parts are nickel-plated for superior corrosion resistance. All c3controls 30mm H-Line operators are UL Listed and are rated Type 4/4X standard for watertight and corrosion resistance. In addition, operators are also listed for Type 1, 2, 3, 3R, 12 and 13, and meet global standards requirements.

Product features include:

- Polyester construction for superior corrosion resistance, moisture rejection and electrical insulation.
- Our 30mm H-Line operators come standard with a polyester clamp ring, although optional aluminum clamp rings are available.
- Full voltage lights incorporate a unique insulated socket design to minimize accidental contact during lamp change.
- All lights use miniature bayonet base lamps that are nickel-plated for corrosion-resistance and to provide reliable lamp secureness.
- #6 stainless steel terminal screws with self-lifting captive wire clamps accommodate #22 through two #12 AWG wires (0.5 - 4mm^2) per terminal.
- Operators conveniently mount in a round 1-13/64" (30.5mm) hole that is directly interchangeable with competitors units and eliminates the labor required for notching.

UNIQUE PRODUCT FEATURES

1. Our revolutionary U-Cup seal is infused with a Teflon coating to eliminate cracking when exposed to harsh conditions such as heat, dryness and sunlight. The U-Cup seal rides easily along the stroker and keeps water, oils, dust and other corrosive particles in the air away from the contact blocks. This U-cup seal also acts like a squeegee and forms a permanent watertight seal that meets Type 4/4X standards.
2. All frictional parts are molded with an internal self lubricant to provide outstanding wear without troublesome greases used by others.

Some of Our Popular Configurations:

MOMENTARY ILLUMINATED PUSH BUTTON OPERATORS WITH POLYESTER CLAMP RING (TYPE 4X)

		PUSH BUTTON LENS		MUSHROOM LENS	
	LENS COLOR	CATALOG NUMBER	LIST	CATALOG NUMBER	LIST
Full Voltage	Amber	HFVLU120-HIPBCAR-PRNONC	$206.00	HFVLU120-HIPBCMAR-PRNONC	$218.00
	Green	HFVLU120-HIPBCGN-PRNO	$162.00	HFVLU120-HIPBCMGN-PRNO	$174.00
	Red	HFVLU120-HIPBCRD-PRNC	$162.00	HFVLU120-HIPBCMRD-PRNC	$174.00
Resistor	Green	HRLU120-HIPBCGN-PRNO	$162.00	HRLU120-HIPBCMGN-PRNO	$174.00
	Red	HRLU120-HIPBCRD-PRNC	$162.00	HRLU120-HIPBCMRD-PRNC	$174.00

Added Security!

For added security, all H-Line Push Buttons come standard with a screw tightening mounting bracket to ensure the contact blocks remain snug to the operator.

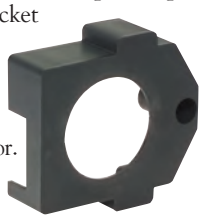

Mix and Match Any Color and Momentary Illuminated Push Button Lens

Push Button Lens

Guarded Push Button Lens

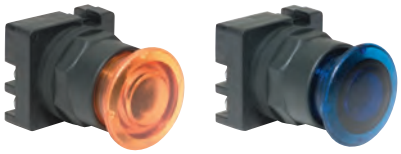

Mushroom Lens (1-1/2" (38mm) dia.)

Shrouded Mushroom Lens (1-1/2" (38mm) dia.)

IT'S EASY TO BUILD YOUR OWN PUSH BUTTON

Simply pick the code number from each of the sections below and combine them to build your part number.

Maintained Push Buttons (Illuminated)

2-Position Push-Pull

	PPM			–		IMC		–
I	II	III	IV		V	VI	VII	VIII

Example: To build one of our most popular Push Buttons, the part number would be I + PPM + III + IV + V + IMC + VII + VIII or HFVPPM120-IMCAR-PRNONC

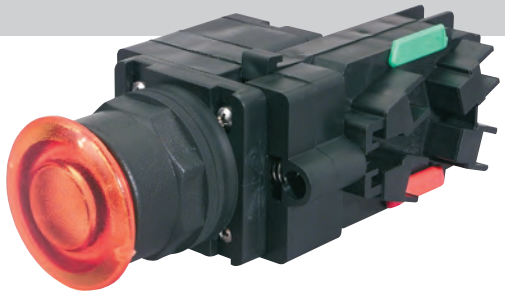

I. ILLUMINATED PUSH BUTTON OPERATOR

CODE	DESCRIPTION	LIST
HFV	Full Voltage	$ 92.00
HRL	Resistor	$ 96.00

II. CAP TYPE

CODE	DESCRIPTION
PPM	Push-Pull Maintained

III. VOLTAGE BASED ON OPERATOR TYPE

CODE	DESCRIPTION
	FULL VOLTAGE
6	6V AC/DC‡
12	12V AC/DC
24	24V AC/DC
120	120V AC/DC
	RESISTOR
120	120V AC/DC
240	240V AC/DC
480	480V AC/DC (LED only)

NOTE: Products marked with ‡ are not available for same-day shipping. Contact our Customer First Team for lead times and minimum order quantities.

The 2-Position Push-Pull is maintained in both the push and pull positions. The primary application is "push" to "stop" and "pull" to "start".

IV. LAMP TYPE/COLOR

CODE	COLOR	LIST
	LED	
LA	Amber	$ 18.00
LB	Blue	$ 18.00
LG	Green	$ 18.00
LR	Red	$ 18.00
LW	White	$ 18.00
	INCANDESCENT	
(Blank)	Clear NOTE: Incandescent bulbs are not an option for HRLPPM480.	—
NL	**No Lamp**	– $ 1.80

V. CLAMP RING

CODE	DESCRIPTION	LIST
(Blank)	Black Polyester (Type 4X)	—
A	Aluminum (Type 4)*	$ 4.30

*NOTE: Aluminum clamp rings are NOT corrosion resistant.

VI. LENS TYPE

CODE	DESCRIPTION	LIST
IMC	Illuminated Push Button Mushroom Lens	$ 36.00

VII. LENS COLOR

CODE	COLOR
AR	Amber
BE	Blue
CR	Clear
GN	Green
RD	Red
WE	White

VIII. CONTACT BLOCK CONFIGURATION

CODE	DESCRIPTION	LIST
	FACTORY SEALED, CLASS 1, DIV. 2/ZONE 2, 720 VA	
(Blank)	Operator without Contact Blocks	—
CBFS	Contact Block with 1 Normally Open/1 Normally Closed	$ 94.00
	POWER REED, CLASS 1, DIV. 2/ZONE 2, 360 VA INDUCTIVE	
(Blank)	Operator without Contact Blocks	—
PRNO	1 Normally Open Contact Block	$ 74.00
PRNC	1 Normally Closed Contact Block	$ 74.00
PR2NO	Contact Block w/2 Normally Open	$118.00
PR2NC	Contact Block w/2 Normally Closed	$118.00
PRNONC	Contact Block with 1 Normally Open/1 Normally Closed	$118.00
	MID-POWER REED, CLASS 1, DIV. 2/ZONE 2, 180 VA INDUCTIVE	
(Blank)	Operator without Contact Blocks	—
MPRNO	1 Normally Open Contact Block	$ 59.00
MPRNC	1 Normally Closed Contact Block	$ 59.00
MPR2NO	Contact Block w/2 Normally Open	$102.00
MPR2NC	Contact Block w/2 Normally Closed	$102.00
MPRNONC	Contact Block with 1 Normally Open/1 Normally Closed	$102.00
	MEDIUM LOGIC REED, CLASS 1, DIV. 2/ZONE 2, 40 VA INDUCTIVE, 100 WATTS RESISTIVE	
(Blank)	Operator without Contact Blocks	—
MLRNO	1 Normally Open Contact Block	$ 35.00
MLRNC	1 Normally Closed Contact Block	$ 35.00
MLR2NO	Contact Block w/2 Normally Open	$ 55.00
MLR2NC	Contact Block w/2 Normally Closed	$ 55.00
MLRNONC	Contact Block with 1 Normally Open/1 Normally Closed	$ 55.00
	LOGIC REED, CLASS 1, DIV. 2/ZONE 2, 40 WATTS RESISTIVE*	
(Blank)	Operator without Contact Blocks	—
LRNO	1 Normally Open Contact Block	$ 22.00
LRNC	1 Normally Closed Contact Block	$ 22.00

*NOTE: Logic Reeds do not require and are not provided with a Mounting Screw.

SEE PAGE 26 FOR LAMP REPLACEMENT CHART AND PAGE 27 FOR TECHNICAL DATA.

DISCOUNT SCHEDULE E

30mm H-Line Maintained Illuminated Push Buttons

c3controls 30mm H-Line Maintained Illuminated Push Buttons are durable and flexible for a variety of uses, and all metal parts are nickel-plated for superior corrosion resistance. All c3controls 30mm H-Line operators are UL Listed and are rated Type 4/4X standard for watertight and corrosion resistance. In addition, operators are also listed for Type 1, 2, 3, 3R, 12 and 13, and meet global standards requirements.

Product features include:

- Polyester construction for superior corrosion resistance, moisture rejection and electrical insulation.
- Our 30mm H-Line operators come standard with a polyester clamp ring, although optional aluminum clamp rings are available.
- Full voltage lights incorporate a unique insulated socket design to minimize accidental contact during lamp change.
- All lights use miniature bayonet base lamps that are nickel-plated for corrosion-resistance and provide reliable lamp secureness.
- #6 stainless steel terminal screws with self-lifting captive wire clamps accommodate #22 through two #12 AWG wires (0.5 - 4mm^2) per terminal.
- Operators conveniently mount in a round 1-13/64" (30.5mm) hole that is directly interchangeable with competitors units and eliminates the labor required for notching.

UNIQUE PRODUCT FEATURES

1. Our seal is infused with a coating to eliminate cracking when exposed to harsh conditions such as heat, dryness and sunlight. This seal also acts as a light reflector because it is white which increases light output and improves visibility from all angles.
2. All frictional parts are molded with an internal self lubricant to provide outstanding wear without troublesome greases used by others.
3. Our rugged Lexan™ lenses can resist high impact for reliable performance in most environments even in high ambient temperatures.

Some of Our Popular Configurations:

2-POSITION PUSH-PULL MAINTAINED OPERATORS WITH POLYESTER CLAMP RING (TYPE 4X)

	POWER REED CONTACT BLOCK 2 CIRCUIT (1 NO/1 NC)				FACTORY SEALED CONTACT BLOCK 2 CIRCUIT (1 NO/1 NC)			
O = OPEN **X = CLOSED**		OUT	IN			OUT	IN	
	PRNONC	X	O		CBFS	X	O	
	PRNONC	O	X		CBFS	O	X	
TYPE	**CATALOG NUMBER**			**LIST**	**CATALOG NUMBER**			**LIST**
Full Voltage	HFVPPM120LR-IMCRD-PRNONC			$268.30	HFVPPM120LR-IMCRD-CBFS			$240.00
Resistor	HRLPPM120-IMCRD-PRNONC			$250.00	HRLPPM120-IMCRD-CBFS			$226.00

Available Lens Colors for 2-Position Maintained Illuminated Push Buttons

(1-1/2" (38mm) dia.)

IT'S EASY TO BUILD YOUR OWN PILOT LIGHT

Simply pick the code number from each of the sections below and combine them to build your part number.

Pilot Lights

I	II	III	– IV	PLL V	VI

Example: To build one of our most popular Pilot Lights, the part number would be I + II + III + IV + PLL + VI or **HFVLU120LG-PLLGN**

I. PILOT LIGHT OPERATOR

CODE	DESCRIPTION	LIST
HFVLU	Full Voltage	$ 64.00
HRLU	Resistor	$ 64.00
HRTLU	Dual Input Remote Test	$100.00

II. VOLTAGE BASED ON OPERATOR TYPE

CODE	DESCRIPTION
	FULL VOLTAGE
6	6V AC/DC‡
12	12V AC/DC
24	24V AC/DC
120	120V AC/DC
	RESISTOR
120	120V AC/DC
240	240V AC/DC
480	480V AC/DC (LED only)
	DUAL INPUT REMOTE TEST
6	6V AC/DC‡
12	12V AC/DC
24	24V AC/DC
120	120V AC/DC
240	240V AC/DC

NOTE: Products marked with ‡ are not available for same-day shipping. Contact our Customer First Team for lead times and minimum order quantities.

III. LAMP TYPE/COLOR

CODE	COLOR	LIST
	LED	
LA	Amber	$ 18.00
LB	Blue	$ 18.00
LG	Green	$ 18.00
LR	Red	$ 18.00
LW	White	$ 18.00
	INCANDESCENT	
(Blank)	Clear NOTE: Incandescent bulbs are not an option for HRLU480.	
NL	**No Lamp**	–$ 1.80

IV. CLAMP RING

CODE	DESCRIPTION	LIST
(Blank)	Black Polyester (Type 4X)	—
A	Aluminum (Type 4)*	$ 4.30

*NOTE: Aluminum clamp rings are NOT corrosion resistant.

V. LENS TYPE

CODE	DESCRIPTION	LIST
PLL	Pilot Light Lens	$ 11.00

VI. LENS COLOR

CODE	COLOR
AR	Amber
BE	Blue
CR	Clear
GN	Green
RD	Red
WE	White

See page 26 for Lamp Replacement Chart and page 27 for Technical Data.

DISCOUNT SCHEDULE **E**

DUAL INPUT REMOTE TEST

Our unique Dual Input Remote light unit can be used as a pilot light while also permitting the testing of a number of lights from a single push button. A diode circuit isolates the test supply from the normal supply. The schematic shown represents a typical dual input application.

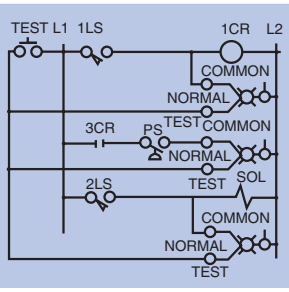

Available Lens Colors for Pilot Lights

30mm H-Line Pilot Lights

Our 30mm H-Line Pilot Lights, when utilized with our LED lamps provide leakage protection, long-lasting life and high quality with tremendous resistance to shock and vibration. Our reflection technology and state-of-the-art LED lamps improve visibility from all angles. c3controls LED lamps last 100,000 hours — *that's 11.4 years!* Combine these LEDs with our full voltage or resistor packages for optimum durability.
All c3controls 30mm H-Line operators are UL Listed and are rated Type 4/4X standard for watertight and corrosion resistance. In addition, operators are also listed for Type 1, 2, 3, 3R, 12 and 13, and meet global standards requirements.

Product features include:

- Polyester construction for superior corrosion resistance, moisture rejection and electrical insulation.
- All metal parts are nickel-plated for superior corrosion resistance.
- Full voltage lights incorporate a unique insulated socket design to minimize accidental contact during lamp change.
- #6 stainless steel terminal screws with self-lifting captive wire clamps accommodate #22 through two #12 AWG wires (0.5 - 4mm^2) per terminal.
- Operators conveniently mount in a round 1-13/64" (30.5mm) hole that is directly interchangeable with competitors units and eliminates the labor required for notching.

UNIQUE PRODUCT FEATURES

1. Compact, thin design is also vibration resistant.
2. Our seal is infused with a coating to eliminate cracking when exposed to harsh conditions such as heat, dryness and sunlight. This seal also acts as a light reflector because it is white which increases light output and improves visibility from all angles.
3. Our rugged Lexan™ lenses provide better visibility and can resist high impact for reliable performance in most environments, even in high ambient temperatures.
4. These light units use a miniature bayonet base lamp which are nickel-plated for corrosion resistance and provide reliable lamp secureness.

Some of Our Popular Configurations:

PILOT LIGHTS WITH POLYESTER CLAMP RING (TYPE 4X)

CATALOG NUMBER	DESCRIPTION	LIST
HFVLU24LA-PLLAR	Full Voltage 24V Amber LED w/Amber Lens	$ 93.00
HFVLU24LG-PLLGN	Full Voltage 24V Green LED w/Green Lens	$ 93.00
HRLU120LR-PLLRD	Resistor 120V Red LED w/Red Lens	$ 93.00

IT'S EASY TO BUILD YOUR OWN PILOT LIGHT

Simply pick the code number from each of the sections below and combine them to build your part number.

Push-To-Test Pilot Lights

		PTT			–		
I	II	III	IV	V		VI	VII	VIII

Example: To build one of our most popular Pilot Lights, the part number would be I + II + PTT + IV + V + VI + VII + VIII or HFSFVPTT120-HIPBCGN

I. CONTACT BLOCK CONFIGURATION

CODE	DESCRIPTION	LIST
HPR	Hermetically Sealed Reed Contact (wired at factory)	$118.00
HFS	Factory Sealed Contact (wired at factory)	$106.00

II. PUSH-TO-TEST OPERATOR

CODE	DESCRIPTION	LIST
FV	Full Voltage	$ 64.00
RL	Resistor	$ 64.00

III. OPERATOR TYPE

CODE	DESCRIPTION	LIST
PTT	Push-To-Test	$ 9.00

IV. VOLTAGE BASED ON OPERATOR TYPE

CODE	DESCRIPTION
	FULL VOLTAGE
6	6V AC/DC‡
12	12V AC/DC
24	24V AC/DC
120	120V AC/DC
	RESISTOR
120	120V AC/DC
240	240V AC/DC
480	480V AC/DC (LED only)

NOTE: Products marked with ‡ are not available for same-day shipping. Contact our Customer First Team for lead times and minimum order quantities.

V. LAMP TYPE/COLOR

CODE	COLOR	LIST
	LED	
LA	Amber	$ 18.00
LB	Blue	$ 18.00
LG	Green	$ 18.00
LR	Red	$ 18.00
LW	White	$ 18.00
	INCANDESCENT	
(Blank)	Clear NOTE: Incandescent bulbs are not an option for RLPTT480.	—
NL	**No Lamp**	– $ 1.80

VI. CLAMP RING

CODE	DESCRIPTION	LIST
(Blank)	Black Polyester (Type 4X)	—
A	Aluminum (Type 4)*	$ 4.30

*NOTE: Aluminum clamp rings are NOT corrosion resistant.

See page 26 for Lamp Replacement Chart and page 27 for Technical Data.

VII. LENS TYPE

CODE	DESCRIPTION	LIST
HIPBC	Illuminated Push Button Lens	$ 24.00
HIPBCM	Illuminated Push Button Mushroom Lens	$ 36.00
HGIPBC	Guarded Illuminated Push Button Lens*	$ 36.00
HSIPBCM	Shrouded Illuminated Push Button Mushroom Lens*	$ 48.00

*NOTE: Aluminum clamp rings are not an option for HGIPBC or HSIPBCM.

VIII. LENS COLOR

CODE	COLOR
AR	Amber
BE	Blue
CR	Clear
GN	Green
RD	Red
WE	White

Push-To-Test Pilot Lights combine an illuminated push button with a normally open/normally closed contact block factory wired for three-point wiring in standard push-to-test circuits. **See page 17 for wiring schematic.**

DISCOUNT SCHEDULE E

Available Lens Colors for Push-To-Test Pilot Lights.

Push Button Lens — Guarded Push Button Lens — Mushroom Lens (1-1/2" (38mm) dia.) — Shrouded Mushroom Lens (1-1/2" (38mm) dia.)

30mm H-Line Push-To-Test Pilot Lights

Our 30mm H-Line Illuminated Push-To-Test Pilot Lights, when utilized with our LED lamps provide leakage protection, long-lasting life and high quality with tremendous resistance to shock and vibration. Our reflection technology and state-of-the-art LED lamps improve visibility from all angles. c3controls LED lamps last 100,000 hours — *that's 11.4 years!* Combine these LEDs with our full voltage or resistor packages for optimum durability. All c3controls 30mm H-Line operators are UL Listed and are rated Type 4/4X standard for watertight and corrosion resistance. In addition, operators are also listed for Type 1, 2, 3, 3R, 12 and 13, and meet global standards requirements.

Product features include:

- Polyester construction for superior corrosion resistance, moisture rejection and electrical insulation.
- All metal parts are nickel-plated for superior corrosion resistance.
- Full voltage lights incorporate a unique insulated socket design to minimize accidental contact during lamp change.
- #6 stainless steel terminal screws with self-lifting captive wire clamps accommodate #22 through two #12 AWG wires (0.5 - 4mm^2) per terminal.
- Operators conveniently mount in a round 1-13/64" (30.5mm) hole that is directly interchangeable with competitors units and eliminates the labor required for notching.

UNIQUE PRODUCT FEATURES

1. Our push-to-test pilot lights aid in the troubleshooting of the circuit.
2. Our seal is infused with a coating to eliminate cracking when exposed to harsh conditions such as heat, dryness and sunlight. This seal also acts as a light reflector because it is white which increases light output and improves visibility from all angles.
3. Our rugged Lexan™ lenses provide better visibility and can resist high impact for reliable performance in most environments, even in high ambient temperatures.
4. These light units use a miniature bayonet base lamp which are nickel-plated for corrosion resistance and provide reliable lamp secureness.

WIRING DIAGRAM

Customer connections of line and test power supplies. Light unit is powered by the line circuit. Depressing the lens cap will disconnect the line and connect the test supply, confirming bulb status.

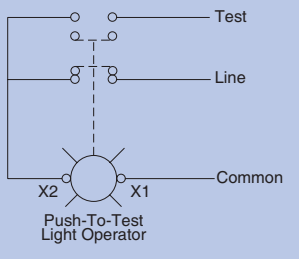

Some of Our Popular Configurations:

PUSH-TO-TEST PILOT LIGHTS W/POLYESTER CLAMP RING (TYPE 4X)

CATALOG NUMBER	DESCRIPTION	LIST
HPRFVPTT120-HIPBCAR	FV 120V w/ Incand. Lamp, Amber Lens & Herm. Seal. Reed	$215.00
HFSFVPTT120-HIPBCGN	FV 120V w/ Incand. Lamp, Green Lens & Factory Seal. CB	$203.00
HFSFVPTT120-HIPBCRD	FV 120V w/ Incand. Lamp, Red Lens & Factory Seal. CB	$203.00

Added Security!

For added security, all H-Line Push-To-Test Pilot Lights come standard with a screw tightening mounting bracket to ensure the contact blocks remain snug to the operator.

IT'S EASY TO BUILD YOUR OWN PILOT LIGHT

Simply pick the code number from each of the sections below and combine them to build your part number.

20-277V Multi-Voltage Pilot Lights

I	II	III	–	IV	PLL V	VI	–	VII

Example: To build one of our most popular Pilot Lights, the part number would be **I + II + III + IV + PLL + VI + VII** or **30MV20-277DLW-PLLRD**

I. OPERATOR TYPE

CODE	DESCRIPTION	LIST
30MV20-277	Non-Relampable Multi-Voltage Pilot Light	$107.00

II. LED LAMP FUNCTION

CODE	DESCRIPTION
D	Standard

See page 26 for Lamp Replacement Chart and page 27 for Technical Data.

III. LED LAMP COLOR

CODE	COLOR
LW	White

IV. CLAMP RING

CODE	DESCRIPTION	LIST
(Blank)	Black Polyester (Type 4X)	—
A	Aluminum (Type 4)*	$ 4.30

*NOTE: Aluminum clamp rings are NOT corrosion resistant.

V. LENS TYPE

CODE	DESCRIPTION	LIST
PLL	Pilot Light Lens	$ 11.00

VI. LENS COLOR

CODE	COLOR
AR	Amber
BE	Blue
CR	Clear
GN	Green
RD	Red
WE	White

VII. OPTIONS

CODE	DESCRIPTION	LIST
(Blank)	None	—
IP20	IP20 Guard	$ 4.00

DISCOUNT SCHEDULE **E**

c3controls LED lamps last 100,000 hours — *that's 11.4 years!*

Some of Our Popular Configurations:

MULTI-VOLTAGE PILOT LIGHTS

CATALOG NUMBER	DESCRIPTION	LIST
30MV20-277DLW-PLLAR	Multi-Voltage 20-277V, Non-Relampable w/ White LED and Amber Lens	$118.00
30MV20-277DLW-PLLGN	Multi-Voltage 20-277V, Non-Relampable w/ White LED and Green Lens	$118.00
30MV20-277DLW-PLLRD	Multi-Voltage 20-277V, Non-Relampable w/ White LED and Red Lens	$118.00

Available Lens Colors For Multi-Voltage Pilot Lights

30mm Multi-Voltage Pilot Lights

When you match up our 30mm Pilot Lights with our LED lamps you get a quality, long-lasting, leakage protected pilot device that withstands shock and vibration. Our state-of-the-art LED lamps last 100,000 hours—that's 11.4 years! And we nest them in a bright white cup that casts light through two lenses scored to improve visibility from all angles. c3controls' 30mm multi-voltage pilot lights are UL listed and rated Type 4/4X as standard to resist water and corrosion. In addition, these lights are listed for Type 1, 2, 3, 3R, 12 and 13, and meet global standards.

Product features include:

- Polyester construction for superior corrosion resistance, moisture rejection and electrical insulation.
- #6 terminal screws with self-lifting captive wire clamps to accommodate #22 through two #12 AWG wires (0.5 - 4mm^2) per terminal.
- Nickel plated clamp rings are ideal for corrosive environments. Heavy-duty brass current carrying components for improved conductivity and corrosion resistance.
- Bi-polar design means functionality is independent of which lead is connected to each terminal.
- Rugged Lexan™ lenses can resist high impact for reliable performance in most environments—even in high ambient temperatures.
- Superior performance even in high vibration and shock applications.
- Enhanced safety with field installable IP20 terminal guards are transparent to maintain terminal visibility. Their construction provides easy access to the device terminals—so wiring is convenient and quick, and they snap securely in place without tools.

  For your convenience when marking terminals, our IP20 guards use Series WTB2 markers (see Section 22 Page 32), simplifying wiring and troubleshooting.

UNIQUE PRODUCT FEATURES

c3 Exclusive!

Eliminate the Headache of Multiple Lights to Match Multiple Voltages!

Our state-of-the-art, super bright LEDs and printed circuit boards allow you to operate this light at any voltage from 20V to 277V AC or DC without losing light intensity or consuming a lot of power. One light unit covers a lot of applications, reducing your inventory! All you have to do is choose your lens color.

- Wider operating voltage range of 20V-277V AC or DC.
- Depth behind the panel at 1-11/16" / 42.8mm.
- Integrated light circuit protection. We included a fusible link in the electronic circuit, resulting in predictable failure mode (open circuit) and improving reliability.
- A redesigned circuit allows you to use the light unit in a wider range of applications, including electronic and coil applications where leakage current and voltages may exist.

IT'S EASY TO BUILD YOUR OWN SELECTOR SWITCH

Simply pick the code number from each of the sections below and combine them to build your part number.

Selector Switches

_____ – _____ _____ _____ – _____ / _____

I *II* *III* *IV* *V** *VI**

Example: To build one of our most popular Selector Switches, the part number would be **I + II + III + IV + V + VI** or **HSSOR3-SHWE-PRNO/PRNO**

*NOTE: Contact block configurations are based on circuit designations (see page 21 for circuit designation charts).

I. SELECTOR SWITCH OPERATOR FUNCTION

CODE	POS./FUNCTION	LIST
FOR USE WITH FACTORY SEALED CONTACT BLOCKS		
HSSO2	2/Maintained	$ 25.00
HSROLR	2/Spring Return, L to R	$ 42.00
HSRORL	2/Spring Return, R to L	$ 42.00
HSSO3	3/Maintained	$ 25.00
HSROLC	3/Spring Return, L to C	$ 42.00
HSRORC	3/Spring Return, R to C	$ 42.00
HSROLRC	3/Spring Return, L & R to C	$ 42.00
FOR USE WITH HERMETICALLY SEALED CONTACT BLOCKS (POWER REED, MID-POWER REED, MEDIUM LOGIC REED)		
HSSO2	2/Maintained	$ 25.00
HSROLR	2/Spring Return, L to R	$ 42.00
HSRORL	2/Spring Return, R to L	$ 42.00
HSSOR3	3/Maintained	$ 25.00
HSROR3LC	3/Spring Return, L to C	$ 42.00
HSROR3RC	3/Spring Return, R to C	$ 42.00
HSROR3LRC	3/Spring Return, L & R to C	$ 42.00
FOR USE WITH HERMETICALLY SEALED CONTACT BLOCKS (LOGIC REED)		
SSO2	2/Maintained	$ 25.00
SROLR	2/Spring Return, L to R	$ 42.00
SRORL	2/Spring Return, R to L	$ 42.00
SSOR3	3/Maintained	$ 25.00
SROR3LC	3/Spring Return, L to C	$ 42.00
SROR3RC	3/Spring Return, R to C	$ 42.00
SROR3LRC	3/Spring Return, L & R to C	$ 42.00

II. CLAMP RING

CODE	DESCRIPTION	LIST
(Blank)	Black Polyester (Type 4X)	—
A	Aluminum (Type 4)*	$ 4.30

*NOTE: Aluminum clamp rings are NOT corrosion resistant.

III. HANDLE TYPE

CODE	DESCRIPTION	LIST
SH	Standard	$ 9.80
SL	Lever	$ 9.80

IV. HANDLE INSERT COLOR

CODE	COLOR
BE	Blue
GN	Green
GY	Grey
RD	Red
WE	White
YW	Yellow

Each operating handle is black with a factory assembled color insert.

** Contact blocks wired in Series or wired in Parallel use both the left and right sides of the pilot device. They are not factory-compatible with additional contact blocks.

† We recommend that any Normally Closed Logic Reed Contact Block be mounted to the operator before Normally Open Contact Blocks are mounted.

V. CONTACT BLOCK CONFIGURATION (LEFT SIDE)

CODE	DESCRIPTION	LIST
FACTORY SEALED, CLASS 1, DIV. 2/ZONE 2, 720 VA		
(Blank)	Operator without Contact Blocks	—
CBFSR	Contact Block with 1 Normally Open/1 Normally Closed	$ 94.00
POWER REED, CLASS 1, DIV. 2/ZONE 2, 360 VA INDUCTIVE		
(Blank)	Operator without Contact Blocks	—
PRNO	1 Normally Open Contact Block	$ 74.00
PRNC	1 Normally Closed Contact Block	$ 74.00
PR2NO	Contact Block w/2 Normally Open	$118.00
PR2NC	Contact Block w/2 Normally Closed	$118.00
PRNONC	Contact Block with 1 Normally Open/1 Normally Closed	$118.00
PRNCS	2 Normally Closed Contact Blocks Wired in Series**	$153.00
PRNOP	2 Normally Open Contact Blocks Wired in Parallel**	$153.00
MID-POWER REED, CLASS 1, DIV. 2/ZONE 2, 180 VA INDUCTIVE		
(Blank)	Operator without Contact Blocks	—
MPRNO	1 Normally Open Contact Block	$ 59.00
MPRNC	1 Normally Closed Contact Block	$ 59.00
MPR2NO	Contact Block w/2 Normally Open	$102.00
MPR2NC	Contact Block w/2 Normally Closed	$102.00
MPRNONC	Contact Block with 1 Normally Open/1 Normally Closed	$102.00
MPRNCS	2 Normally Closed Contact Blocks Wired in Series**	$123.00
MPRNOP	2 Normally Open Contact Blocks Wired in Parallel**	$124.00
MEDIUM LOGIC REED, CLASS 1, DIV. 2/ZONE 2, 40 VA INDUCTIVE, 100 WATTS RESISTIVE†		
(Blank)	Operator without Contact Blocks	—
MLRNO	1 Normally Open Contact Block	$ 35.00
MLRNC	1 Normally Closed Contact Block	$ 35.00
MLR2NO	Contact Block w/2 Normally Open	$ 55.00
MLR2NC	Contact Block w/2 Normally Closed	$ 55.00
MLRNONC	Contact Block with 1 Normally Open/1 Normally Closed	$ 55.00
MLRNCS	2 Normally Closed Contact Blocks Wired in Series**	$ 74.00
MLRNOP	2 Normally Open Contact Blocks Wired in Parallel**	$ 75.00
LOGIC REED, CLASS 1, DIV. 2/ZONE 2, 40 WATTS RESISTIVE*†		
(Blank)	Operator without Contact Blocks	—
LRNO	1 Normally Open Contact Block	$ 22.00
LRNC	1 Normally Closed Contact Block	$ 22.00
LRNCS	2 Normally Closed Contact Blocks Wired in Series**	$ 47.00
LRNOP	2 Normally Open Contact Blocks Wired in Parallel**	$ 48.00

*NOTE: Logic Reeds do not require and are not provided with a Mounting Screw.

VI. CONTACT BLOCK CONFIGURATION (RIGHT SIDE)

(USE CHART V FROM ABOVE)

DISCOUNT SCHEDULE E

30mm H-Line Selector Switches

With our unique universal cam design, c3controls Selector Switches offer multiple functions in a single device eliminating the need to install separate devices to perform individual functions based on contact block configuration. In addition, interchangeable selector handles provide product selection and field flexibility. All operators feature polyester housings, are UL Listed and are rated Type 4/4X standard for watertight and corrosion resistance. In addition, operators are also listed for Type 1, 2, 3, 3R, 12 and 13, and meet global standards requirements.

HANDLE POSITIONS

2-POSITION	3-POSITION

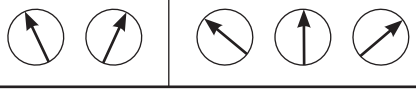

UNIQUE PRODUCT FEATURES

Save time & money - with c3controls, one cam does it all!

1. One-Cam does it all vs. our competitors who need up to fifteen cams to perform the same function. This One-Cam design eliminates the need for multiple cam configurations and selector switch configuration nightmares, saving time, inventory, money, and ensuring 100% cam selection configuration accuracy.
2. Our revolutionary U-Cup seal is infused with a Teflon coating to eliminate cracking when exposed to harsh conditions such as heat, dryness and sunlight.
3. All frictional parts are molded with an internal self-lubricant to provide outstanding wear and smooth cam operations without troublesome greases used by others that attracts dust and other particles in the area.

FACTORY SEALED BLOCK SELECTION FOR 2-POSITION SELECTOR SWITCHES

CIRCUIT DESIG.	HANDLE POSITION LEFT	HANDLE POSITION RIGHT	CONTACT BLOCK CATALOG NO.	MOUNTING POSITION
A	0 X	X 0	CBFSR	EITHER

0 = OPEN X = CLOSED

FACTORY SEALED BLOCK SELECTION FOR 3-POSITION SELECTOR SWITCHES

CIRCUIT DESIG.	HANDLE POSITION LEFT	HANDLE POSITION CENTER	HANDLE POSITION RIGHT	CONTACT BLOCK CATALOG NO.	MOUNTING POSITION
B	X 0	0 X	0 0	CBFSR	LEFT
C	0 0	0 X	X 0	CBFSR	RIGHT

HERMETICALLY SEALED BLOCK SELECTION FOR 2-POSITION SELECTOR SWITCHES

CIRCUIT DESIG.	HANDLE POSITION LEFT	HANDLE POSITION RIGHT	CONTACT BLOCK CATALOG NO.	MOUNTING POSITION
D	0	X	PRNO	EITHER
E	X	0	PRNC	EITHER
F	0 X	X 0	PRNONC	EITHER

HERMETICALLY SEALED REED CONTACT BLOCK SELECTION FOR 3-POSITION SELECTOR SWITCHES

CIRCUIT DESIG.	HANDLE POSITION LEFT	HANDLE POSITION CENTER	HANDLE POSITION RIGHT	POWER REED CAT. #	MID-POWER REED CAT. #	MEDIUM REED CAT. #	LOGIC REED CAT. #	MOUNTING POSITION
G	X	0	0	PRNO	MPRNO	MLRNO	LRNO	LEFT
H	0	X	0	PRNCS (PRNC/PRNC)	MPRNCS (MPRNC/MPRNC)	MLRNCS (MLRNC/MLRNC)	LRNCS (LRNC/LRNC)	BOTH WIRED IN SERIES
I	0	0	X	PRNO	MPRNO	MLRNO	LRNO	RIGHT
J	0	X	X	PRNC	MPRNC	MLRNC	LRNC	LEFT
K	X	0	X	PRNOP (PRNO/PRNO)	MPRNOP (MPRNO/MPRNO)	MLRNOP (MLRNO/MLRNO)	LRNOP (LRNO/LRNO)	BOTH WIRED IN PARALLEL
L	X	X	0	PRNC	MPRNC	MLRNC	LRNC	RIGHT

Mix and Match Any Insert Color and Selector Switch Handle

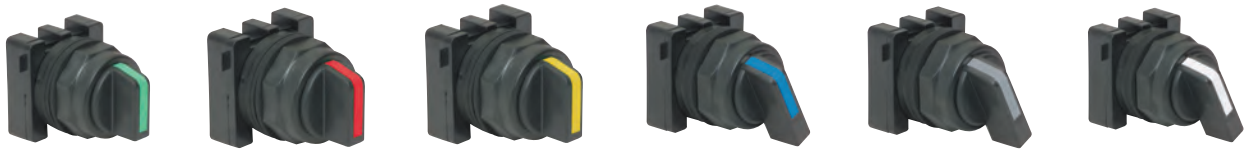

Standard Handle — Lever Handle

IT'S EASY TO BUILD YOUR OWN LEGEND PLATE

Simply pick the code number from each of the sections below and combine them to build your part number.

Legend Plates

_____ _____ – _____ – _____
I II III IV

Legend plates feature 2 lines of text with approximately 16 characters per line. Uppercase is standard unless specified. *The tall legend plate (LPT) features 3 lines of text with approximately 16 characters per line.

I. LEGEND PLATE TYPE

CODE	DESCRIPTION	LIST
LP	Standard 2"h x 2"w	$ 4.00
LPN	Narrow 2"h x 1-3/4"w	$ 4.00
LPS	Short 1-3/4"h x 2"w	$ 4.00
LPT	Tall 2-1/4"h x 2"w*	$ 5.00
LPR	Standard Round 2-13/32" Dia.	$ 9.00
LPRM	Medium Round 2-3/4" Dia.	$11.00
LPRJ	Jumbo Round 3-3/4" Dia.	$12.00

II. FACE AND LETTER COLOR

CODE	FACE COLOR	LETTER COLOR
AL	Aluminum	Black
(Blank)	Black	White
BE	Blue	White
GN	Green	White
RD	Red	White
WE	White	Black
YW	Yellow	Black

III. LEGEND DESIGNATION

A. PUSH BUTTONS AND LIGHTS

CODE	DESCRIPTION
00	(Blank)
01	AUTO
02	CLOSE
31	CYCLE START
100	CYCLE STOP
03	DOWN
102	EMERGENCY
04	EMERGENCY STOP
06	FAST
101	FAULT
07	FORWARD
08	HAND
32	HIGH
33	IN
09	INCH
10	JOG
38	JOG FORWARD
39	JOG REVERSE
34	LOW
35	LOWER
11	MANUAL
26	MOTOR RUN
12	OFF
13	ON
14	OPEN
36	OUT
27	OVERLOAD
15	POWER OFF
16	POWER ON
30	PUSH TO RESET
17	PUSH TO TEST
37	RAISE
109	READY
18	RESET
19	REVERSE
20	RUN
21	SLOW
22	START
23	STOP
24	TEST
29	TRIP
25	UP

B. 2-POSITION SELECTOR

CODE	LEGEND LEFT	LEGEND RIGHT
00	(Blank)	(Blank)
50	AUTO	HAND
68	AUTO	MANUAL
51	DOWN	UP
63	FAST	SLOW
52	FWD	REV
53	HAND	AUTO
73	HIGH	LOW
54	INCH	RUN
75	LEFT	RIGHT
70	LOCAL	REMOTE
55	MANUAL	AUTO
56	OFF	ON
57	ON	OFF
58	OPEN	CLOSE
65	PULL START	PUSH STOP
66	PUSH OFF	PULL ON
64	PUSH ON	PUSH OFF
67	PUSH TO STOP	PULL TO START
71	RAISE	LOWER
59	REV	FWD
60	RUN	JOG
69	SLOW	FAST
61	START	STOP
62	STOP	START
74	SUMMER	WINTER
72	UP	DOWN

C. 3-POSITION SELECTOR

CODE	LEGEND LEFT	LEGEND CENTER	LEGEND RIGHT
00	(Blank)	(Blank)	(Blank)
108	A	O	H
92	AUTO	OFF	HAND
93	AUTO	MAN	OFF
80	DOWN	OFF	UP
81	FWD	AUTO	REV
82	FWD	OFF	REV
107	H	O	A
83	HAND	OFF	AUTO
94	HIGH	OFF	LOW
99	JOG	OFF	AUTO
90	LOCAL	OFF	REMOTE
84	MANUAL	OFF	AUTO
89	OFF	RUN	START
85	OFF	START	RUN
86	OFF	1	2
95	OPEN	OFF	CLOSE
91	RAISE	OFF	LOWER
96	SLOW	OFF	FAST
97	SUMMER	OFF	WINTER
98	UP	OFF	DOWN
87	1	OFF	2
88	1	2	3

IV. ADHESIVE BACK

CODE	DESCRIPTION
(Blank)	No Adhesive Back
A	Adhesive Back

DISCOUNT SCHEDULE E

IT'S EASY TO BUILD YOUR OWN LEGEND PLATE

Simply pick the code number from each of the sections below and combine them to build your part number.

Special Legend Plates

_____ _____ – SP – _____

I II III IV

All legend plates are a 2-ply laminated plastic, laser engraved for a permanent and quality appearance. Uppercase is standard unless specified.

I. LEGEND PLATE TYPE

CODE	DESCRIPTION	LIST
LP	Standard 2"h x 2"w	$ 4.00
LPN	Narrow 2"h x 1-3/4"w	$ 4.00
LPS	Short 1-3/4"h x 2"w	$ 4.00
LPT	Tall 2-1/4"h x 2"w*	$ 5.00
LPR	Standard Round 2-13/32" Dia.	$ 9.00
LPRM	Medium Round 2-3/4" Dia.	$11.00
LPRJ	Jumbo Round 3-3/4" Dia.	$12.00

Legend plates feature 2 lines of text with approximately 16 characters per line.
*The tall legend plate (LPT) features 3 lines of text with 16 characters per line.

DISCOUNT SCHEDULE **E**

II. FACE AND LETTER COLOR

CODE	FACE COLOR	LETTER COLOR
AL	Aluminum	Black
(Blank)	Black	White
BE	Blue	White
GN	Green	White
RD	Red	White
WE	White	Black
YW	Yellow	Black

III. LEGEND DESIGNATION

CODE	DESCRIPTION	LIST
SP	Special Legend	$14.00

IV. ADHESIVE BACK

CODE	DESCRIPTION
(Blank)	No Adhesive Back
A	Adhesive Back

Upon receipt of your order, legend plates will be set-up as specified and a proof will be sent to you prior to production to ensure accuracy.

To order, submit your drawing to:

Mail: c3controls
Attn: Customer First
PO Box 496
Beaver, PA 15009

Fax: 724.775.5283

Email: legendplates@c3controls.com

To help simplify your order process, templates are available by calling our factory at 724.775.7926 or reference one of the drawings shown on page 36.

Special legend plates are not available for same day shipping.

(Sample custom plate)

Custom Legend Plates

- ***Add your Corporate Logo!*** Send us your corporate logo electronically to promote your company image in a clean professional legend plate.
- Available in 2-ply 12" x 24" (304.8mm x 609.6mm) sheets of laminated plastic for custom laser engraving.
- To order, specify part number LP-CP (no adhesive back) or LP-CP-A (adhesive back).
- Initial Set-Up Fee Per Legend Plate: $50/hour (minimum fee $50.00).
- $2.00/Square Inch (minimum $18.00).
- Design services available. Consult factory for details and hourly rate.
- Custom legend plates are not available for same-day shipping.

To order, submit your drawing to:

Mail: c3controls
Attn: Customer First
PO Box 496
Beaver, PA 15009

Fax: 724.775.5283

Email: legendplates@c3controls.com

EXTENDED CLAMP RINGS

We offer four types of 30mm extended clamp rings that guard against accidental operation. Use our Extended Clamp Rings (ECR or AECR) with flush caps, our Clear Guarded Clamp Ring (EECR) with illuminated push buttons and our Large Extended Clamp Ring (LECR) with flush or extended caps, which also provides easier access to your push buttons.

FOR USE WITH NON-ILLUMINATED CAPS		
CODE	**DESCRIPTION**	**LIST**
ECR	Extended Ring	$ 6.00
LECR	Large Extended Ring	$10.00
AECR	Aluminum Extended Ring	$10.00
FOR USE WITH ILLUMINATED CAPS		
CODE	**DESCRIPTION**	**LIST**
EECR	Guarded Clear Polyester Ring	$ 8.00

HOLE PLUG

Use to seal unused panel holes. Our hole plug comes with additional sealing panel gaskets to ease installation and is rated Type 4X.

CODE	DESCRIPTION	LIST
HP	30mm Grey Hole Plug	$11.00

THRUST & TRIM WASHERS

Anti-rotation device for use with 30mm push buttons, selector switches and pilot lights to provide additional protection from rotation and aid in alignment. This product is optional with c3controls gasket technology.

CODE	DESCRIPTION	LIST
TTW	30mm Anti-Rotation Washers	$ 4.00

LOCK OFF ATTACHMENTS

c3controls offers a wide variety of 30mm corrosive resistant lock-off attachments for maintained and momentary push buttons and selector switches. Our LOAX, LOAM and LOAP lock-offs permit locking operators in the depressed position. Our LOAFC lock-off covers and locks the operator so its position can-not be changed and features a 1/4" (6.4mm) diameter pad locing hasp.

LOAFC

LOAX/LOAM/LOAP

CODE	FITS	LIST
LOAX	Standard Extended Cap	$32.00
LOAM	Standard Momentary Mushroom Cap	$32.00
LOAP	Push-Pull Maintained Mushroom Cap (PPMC) or Push Maintained Extended Cap (PMXC)	$32.00
LOAFC	Push Buttons with Flush, Mushroom, Guarded Cap, and Selector Switches with Standard Lever Handle. Not compatible with Momentary Illuminated Guarded (GIPBC), Jumbo Mushroom Cap, or Keyed Selector Switches.	$50.00

PANEL GASKETS

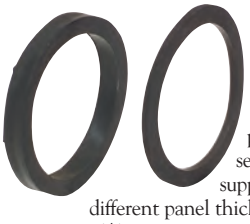

Our panel gaskets are constructed of Neoprene for long life and low compression set and provide a watertight seal. Panel gaskets are supplied to accommodate different panel thickness. In order to meet Type 4/4X requirements, at least one 1/16" (1.6mm) gasket must be used. NOTE: All c3controls 30mm operators are provided with gaskets.

CODE	DESCRIPTION	LIST
PG2	1/16" (1.6mm) Gasket	$ 1.00
PG6	3/16" (4.8mm) Gasket	$ 1.00

GUARD ATTACHMENT

Our PPGD guards against accidental operation and is made of a high strength polyester material. Compatible with momentary or maintained, illuminated or non-illuminated push buttons. NOTE: Not suitable for the Push buttons with shrouded caps or jumbo mushroom caps.

CODE	COLOR	FITS	LIST
PPGD	Black	Maintained Push Buttons	$40.00
PPGD-YW	Yellow	Maintained Push Buttons	$40.00

RESET PUSH BUTTON

Our unique Reset Push Button mounts in a standard 1-13/64" (30.5mm) hole and accepts either 20 hex head bolts or 20 thread rod to provide adjustable extension and save on all rod cutting and fitting labor. Universal styles include two bolts to cover 1" to 3" (25.4mm to 76.2mm) space from cover to overload reset rod. It is rated Type 4/4X as standard.

CODE	DESCRIPTION	LIST
RPB	Reset Push Button	$18.00
RPB-B	RPB w/Bolts (1/4-20 x 1-3/4" & 3")	$20.00
RPB-W	RPB w/Washers	$20.00
RPB-BW	RPB w/Bolt & Washer Set	$22.00
RPB BOLTS	2 Bolts (1/4-20 x 1-3/4" & 3")	$ 2.00
RPB WASHERS	Washer Set	$ 2.00

Special bolt lengths available - please consult factory (not available for guaranteed same day shipping).

CLAMP RING WRENCH

To simplify tightening and loosening of standard polyester and aluminum 1-3/8" (34.9mm) octagonal clamp rings. Won't scratch your lens or panel.

CODE	DESCRIPTION	LIST
CRW	30mm Clamp Ring Wrench	$20.00

DISCOUNT SCHEDULE E

LED & INCANDESCENT REPLACEMENT LAMPS

c3controls offers a full range of lamp options in a miniature bayonet base for direct interchangeability which provides flexibility in choosing the best lamp for each installation application. Multiple voltage options in Incandescent and LED lamps are available. For lamp technical data, see page 27.

LED Lamps

LED _____ _____
/ II III

To order LED Lamps, the part number would be LED + II + III

I. LAMP TYPE

CODE	DESCRIPTION	LIST
LED	LED Lamp	$28.00

Our LED lamps feature built-in leakage protection.

II. VOLTAGE

CODE	DESCRIPTION
6	6V*
12	12V
24	24V
130	130V

*NOTE: Product not available for same-day shipping. Contact our Customer First Team for lead time and minimum order quantity.

III. LAMP COLOR

CODE	COLOR
AR	Amber
BE	Blue
GN	Green
RD	Red
WE	White

Incandescent Lamps

CODE	VOLTAGE	LIST
FVB6	6V*	$ 4.00
FVB12	12V	$ 4.00
FVB24	24V	$ 4.00
FVB55	55V	$ 8.00
FVB120	120V	$ 8.00

*NOTE: Product not available for same-day shipping. Contact our Customer First Team for lead time and minimum order quantity.

LAMP REMOVAL TOOL

Used to facilitate the removal of lamps particularly in illuminated push buttons and push-to-test operators.

CODE	DESCRIPTION	LIST
LRT	Lamp Removal Tool	$ 8.00

DISCOUNT SCHEDULE **E**

30MM REPLACEMENT LAMPS & TEMPERATURE RATINGS

30MM REPLACEMENT LAMP REFERENCE CHART
(FOR REFERENCE ONLY - USE CHARTS ON PAGE 25 TO ORDER)

OPERATOR CODE	OPERATOR VOLTAGE	LED (ALL COLORS)	INCANDESCENT
HFVLU6	Full Voltage 6V AC/DC	LED6	FVB6 or FVB6F
HFVLU12	Full Voltage 12V AC/DC	LED12	FVB12
HFVLU24	Full Voltage 24V AC/DC	LED24	FVB24
HFVLU120	Full Voltage 120V AC/DC	LED120	FVB120
HRLU120L	Resistor 120V AC/DC*	LED24	—
HRLU120I	Resistor 120V AC/DC*	—	FVB55
HRLU240L	Resistor 240V AC/DC*	LED24	—
HRLU240I	Resistor 240V AC/DC*	—	FVB120
HRLU480	Resistor 480V AC/DC*	LED130	—
HRTLU6	Dual Input 6V AC/DC	LED6	FVB6
HRTLU12	Dual Input 12V AC/DC	LED12	FVB12
HRTLU24	Dual Input 24V AC/DC	LED24	FVB24
HRTLU120L	Dual Input 120V AC/DC	LED130	—
HRTLU120	Dual Input 120V AC/DC	—	FVB55

*NOTE: Lamps are unique to Resistor Light Units. Refer to side of light unit for correct replacement lamp part number.

H-LINE UL TEMPERATURE RATINGS

LAMP TYPE	CLASS DESIGNATION	TEMPERATURE
FULL VOLTAGE INDICATING LIGHTS (Temperature rating is determined based on maximum lamp temperature)		
Incandescent	Class 1, Div 2, Groups A,B,C,D Class 1, Zone 2 IIC	T4A, 248° F (120° C) T4A, 248° F (120° C)
LED	Class 1, Div 2, Groups A,B,C,D Class 1, Zone 2 IIC	T6, 185° F (85° C) T6, 185° F (85° C)
RESISTOR LIGHTS (Temperature rating is a function of the maximum lamp or resistor temperature obtained under power)		
Incandescent	Class 1, Div 2, Groups A,B,C,D Class 1, Zone 2 IIC	T3C, 320° F (160° C) T3C, 320° F (160° C)
LED	Class 1, Div 2, Groups A,B,C,D Class 1, Zone 2 IIC	T4A, 248° F (120° C) T4A, 248° F (120° C)
MULTI-VOLTAGE LIGHTS (20V - 277V AC/DC)		
LED	Class 1, Div 2, Groups A,B,C,D Class 1, Zone 2 IIC	T4A, 248° F (120° C) T4A, 248° F (120° C)

30MM HAZARDOUS DUTY PILOT DEVICES

ELECTRICAL RATINGS

Lamp	Industry Number	Rated Volts	Lumens (MSCD)	Design Life (Hrs.)	Current Draw (mA)	Lamp Type	Shock & Vibration	Leakage Protection
FVB6	1866	6.3V	0.65	5,000	250	Incandescent	Very Good	N/A
FVB12	756	14V	0.31	15,000	80	Incandescent	Good	N/A
FVB24	757	28V	0.62	7,500	80	Incandescent	Good	N/A
FVB55	1835	55V	1.1	5,000	50	Incandescent	Good	N/A
FVB120	**	130V	0.36	10,000	20	Incandescent	Good	N/A
LED6	**	6V†	Varies w/ Color 2000 mcd Typical	100,000	50	LED	Excellent	14 mA
LED12	**	12V†		100,000	<20	LED	Excellent	4 mA
LED24	**	24V†		100,000	<20	LED	Excellent	4 mA
LED130	**	120/130V†		100,000	<10	LED	Excellent	2 mA

**Designates a lamp design optimized for c3controls Illuminated devices. See LED replacement lamps on page 25.
† LED voltage tolerance is +/- 10%

MULTI-VOLTAGE POWER CONSUMPTION & CURRENT DRAW

System Voltage	AC Current Draw (mA)	DC Current Draw (mA)	Power Consumption (W)
24V	21	20	AC: <1 DC: <1/2
48V	17	7	
120V	3.5	—	
125V	—	3	
240V	2.5	—	
250V	—	2	
277V	2.5	—	
PROTECTION FEATURES			
Fused to Fail Open		Yes	

DIELECTRIC STRENGTH (TERMINAL TO GROUND)	2200V for 1 Minute

CONTACT BLOCKS

FACTORY SEALED: Contact Blocks are Certified as "Explosion Proof". Devices employing this method of protection are designed so that all electrical parts are enclosed in a switch housing that is capable of withstanding, without damage, an explosion of a specified gas or vapor/air mixture which may occur during the operation of the switch. Further, the explosion internal to the switch body is controlled so that the hot gases are extinguished and cooled before they are allowed to escape to the surrounding atmosphere.

HERMETICALLY SEALED: Contact Blocks are Certified as "Non-Incendive". Devices employing this method of protection are designed so that all electrical parts are a bonded part of the switch housing that forms an arcing chamber that is evacuated of all oxygen, filled with an inert gas, and then sealed to prohibit the exchange of gases with the surrounding environment. These devices are incapable of igniting the surrounding gases or vapor/air mixtures under normal operation. Devices of this type are suitable for use in Div. 2/ Zone 2 applications. Hermetically Sealed contact blocks are also extremely useful for switching low energy circuits or circuits applied in atmospheres containing oxidizing agents and pollutants that might effect the performance of silver switching and metal contact elements. Hermetically Sealed Switch performance is consistent and repeatable in almost any environment.

FACTORY SEALED CONTACT BLOCK - CBFS/CBFSR - Class I Div. 2 Gr. B, C & D / Zone 2 Gr. IIB +H2

	Utilization Category				
	IEC	UL	Make Rating	Break Rating	Ith-Thermal Current
AC	AC-15	A600	7200VA	720VA	10A
DC	DC-13	P300	138VA	138VA	5A

NOTE: For AC voltage below 72V AC the maximum allowed switching current is 10A = Ith. For DC voltages below 28V DC the maximum allowed switching current is 5A = Ith.
For switching applications below 24V/40mA, Hermetic REED contacts are recommended.

HERMETICALLY SEALED POWER REED CONTACT BLOCK - Class I Div. 2 Gr. A, B, C & D / Zone 2 Gr. IIC

	Utilization Category				
	IEC	UL	Make Rating	Break Rating	Ith-Thermal Current
AC	AC-15	B300	3600VA	360VA	5A
	AC-15	C600	1800VA	180VA	2.5A
DC	DC-13	Q300	69VA	69VA	2.5A

NOTE: For AC voltage below 72V AC the maximum allowed switching current is 5A = Ith. For DC voltages below 28V DC the maximum allowed switching current is 2.5A = Ith.
Suitable for switching DRY Circuits and Low Energy Circuits (Less than 24V-40mA).

30MM HAZARDOUS DUTY PILOT DEVICES

CONTACT BLOCKS (CONTINUED)

HERMETICALLY SEALED MEDIUM-LOGIC REED CONTACT BLOCK - Class I Div. 2 Gr. A, B, C & D / Zone 2 Gr. IIC

	Utilization Category				
	IEC	UL	Inductive	Resistive	Ith-Thermal Current
AC	AC-12	250V Max.	40VA	100 Watt	3A

NOTE: Suitable for switching DRY Circuits and Low Energy Circuits (Less than 24V-40mA).

HERMETICALLY SEALED MID-POWER REED CONTACT BLOCK - Class I Div. 2 Gr. A, B, C & D / Zone 2 Gr. IIC

	Utilization Category				
	IEC	UL	Make Rating	Break Rating	Ith-Thermal Current
AC	AC-15	C300	1800VA	180VA	2.5A
DC	DC-13	Q150	69VA	69VA	2.5A

NOTE: For AC voltage below 72V AC the maximum allowed switching current is 2.5A = Ith. For DC voltages below 28V DC the maximum allowed switching current is 2.5A = Ith. Suitable for switching DRY Circuits and Low Energy Circuits (Less than 24V-40mA).

HERMETICALLY SEALED LOGIC REED CONTACT BLOCK - Class I Div. 2 Gr. A, B, C & D / Zone 2 Gr. IIC

	Utilization Category				
	IEC	UL	Inductive	Resistive	Ith-Thermal Current
AC		250V Max.	N/A	40 Watt	2A

NOTE: Suitable for switching DRY Circuits and Low Energy Circuits (Less than 24V-40mA).

	UNITS	
ENVIRONMENTAL RATINGS		
Operators		Rated and Certified for us in Type 1, 2, 3, 3R, 4/4X, 12 & 13 and IP65
Operating Temperature	°F / °C	-40 to +131 / -40 to +55
Storage Temperature	°F / °C	-40 to +185 / -40 to +85

NOTE: Operating environments below freezing temperatures are assumed to be absent of freezing liquids or pollutants

TERMINAL & WIRING CONSIDERATION		
AWG Conductor		22-12 CU (Copper only - Solid & Stranded) [.5 ~ 4mm^2] One or two wires permitted per termination
Recommended Torque	Lb-in. [Nm]	7 – 10 [.8]
CONSTRUCTION		
OPERATING FORCES		
PUSH BUTTONS (OPERATORS ONLY)		
Momentary	lbs. [N]	1.3 [5.8]
Illuminated Momentary	lbs. [N]	2.8 [12.4]
Maintained	lbs. [N]	4 – 6 [17.9 – 26.7]
Illuminated Maintained	lbs. [N]	4.6 [20.5]
RESET PUSH BUTTON	lbs. [N]	1.5 [6.7]
SELECTOR SWITCHES		
Maintained	in-lbs. [Nm]	1.7 [.19]
Momentary	in-lbs. [Nm]	1.7 [.19]
PUSH-TWIST RELEASE	lbs. [N]	4.7 [20.9]
STANDARD CONTACT BLOCKS	lbs. [N]	1 [4.45]
INDICATING LIGHTS		Refer to the appropriate Lamp Data
MULTI-VOLTAGE LIGHTS	VAC/VDC	20-277 (Burden .816W Max.)
MECHANICAL ENDURANCE		
PUSH BUTTONS		
Maintained	Ops.	5,000,000
Momentary	Ops.	250,000
SELECTOR SWITCHES	Ops.	500,000
ALL OTHER DEVICES	Ops.	250,000
STANDARD CONTACT BLOCKS	Ops.	10,000,000
INDICATING LIGHTS	Ops.	Refer to the appropriate Lamp Data

30MM HAZARDOUS DUTY PILOT DEVICES		
	UNITS	
MATERIALS		
Operator Housings		Thermoplastic Polyester and Polyester Blends (UV Stabilized for outdoor use)
Operator Caps and Handles - Non-Illuminated (Glass Reinforced Grades)		Thermoplastic Polyester and Polyester Blends (UV Stabilized for outdoor use)
Mounting Rings and Nuts		Thermoplastic Polyester and Polyester Blends (UV Stabilized for outdoor use)
Thrust Washer		Thermoplastic Polyester and Polyester Blends (UV Stabilized for outdoor use)
Trim Washer		Thermoplastic Polyester and Polyester Blends (UV Stabilized for outdoor use)
Pilot Light Lens		High Impact Polycarbonate (UV Stabilized for outdoor use)
Transparent Push Button and Mushroom Caps		High Impact Polycarbonate (UV Stabilized for outdoor use)
Certain CAM and Bearing Parts		Custom Polymers: Teflon, Silicon and Moly-Disulfide impregnated for improved wearability
Rubber Boots		Custom Polymers: Fluorosilicone and Thermoplastic Neoprene
Seals		Neoprene Gaskets
		Thermoplastic - Molded Neoprene and Alloy Derivitives
		BUNA N - Rubber - Teflon Coated
		Thermoplastic - Elastomer Molded Seals
		Fluorosilicone - Boots
Push Pull Bearings		Stainless Steel
Internal Tubes for Maintained Devices		Stainless Steel
Detents for Maintained Devices		Stainless Steel
Springs & Screws		Stainless Steel
Optional Mounting Nut		Aluminum
ROHS COMPLIANCE		For RoHS compliance documentation by product, refer to www.c3controls.com

MOMENTARY NON-ILLUMINATED H-LINE PUSH BUTTONS

Fully-assembled operators come standard with one 3/16" (4.8mm) and three 1/16" (1.6mm) gaskets.
See mounting gasket specifications chart #3 on page 35.

Non-Illuminated Operator (shown with Flush Cap & Factory Sealed Contact Block)

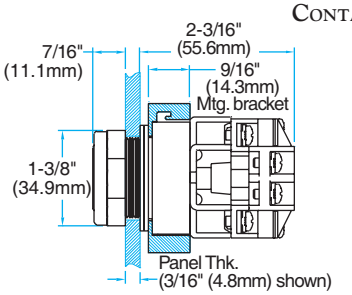

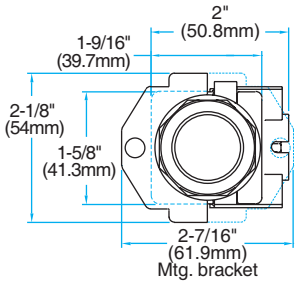

Momentary Extended Cap

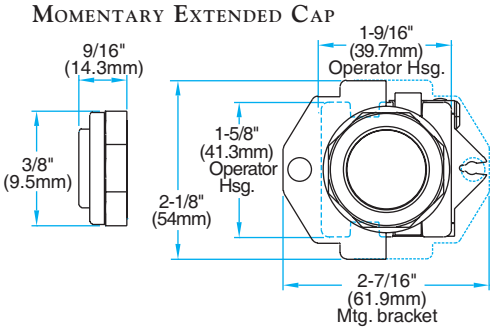

Momentary 1-1/2" (38mm) Mushroom Cap

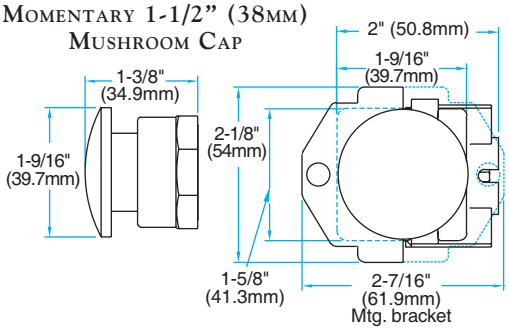

Momentary Guarded Flush Cap

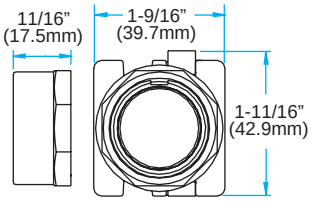

Momentary Guarded Extended Cap

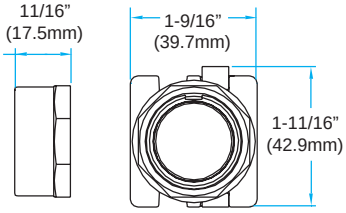

Momentary 1-1/2" (38mm) Shrouded Mushroom Cap

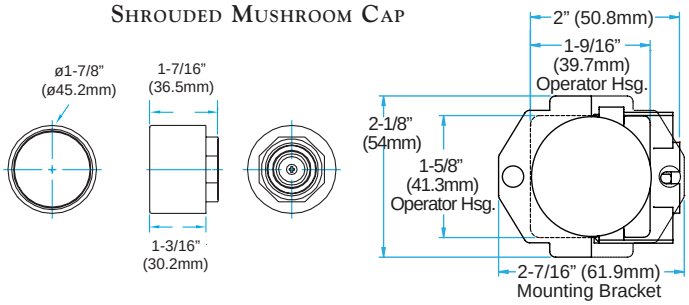

Momentary 2-1/4" (57.2mm) Jumbo Mushroom Cap

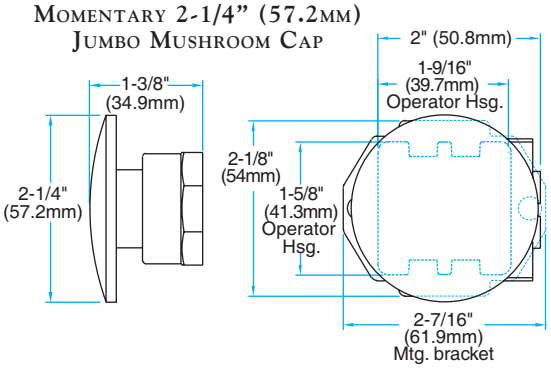

Momentary 2-1/4" (57.2mm) Shrouded Jumbo Mushroom Cap

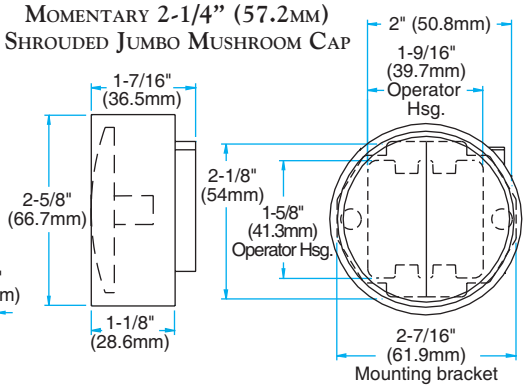

Momentary Fluorosilicone Rubber Boot

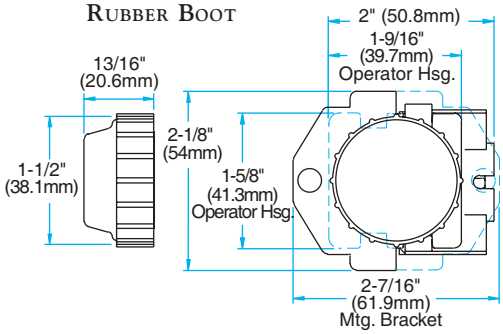

Non-Illuminated Push Button Mounting Bracket

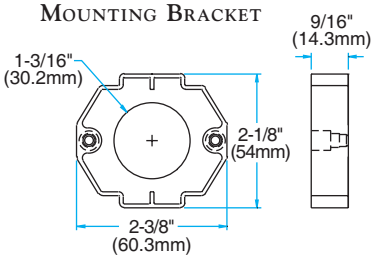

MAINTAINED NON-ILLUMINATED H-LINE PUSH BUTTONS

Fully-assembled operators come standard with one 3/16" (4.8mm) and three 1/16" (1.6mm) gaskets.
See mounting gasket specifications chart #3 on page 35.

2-Position Push-Pull Maintained 1-1/2" (38mm) Mushroom Cap

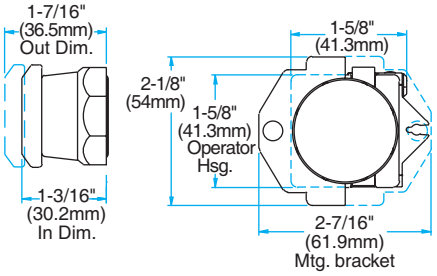

2-Position Push-Pull Maintained Operator (shown with 2-1/4" (57.2mm) Jumbo Mushroom Cap)

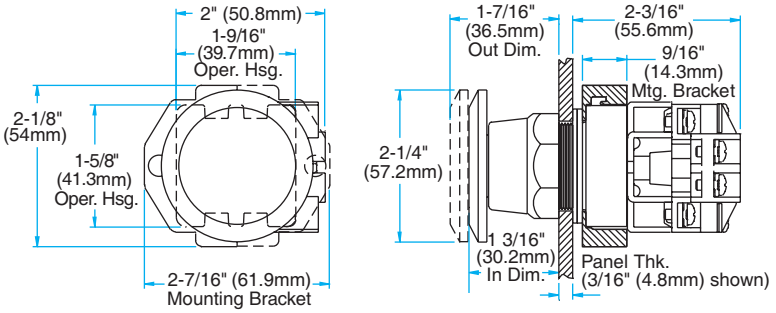

MOMENTARY ILLUMINATED H-LINE PUSH BUTTONS

Fully-assembled operators come standard with one 3/16" (4.8mm) and three 1/16" (1.6mm) gaskets.
See mounting gasket specifications chart #3 on page 35.

Illuminated Full Voltage Operator (shown with HIPBC)

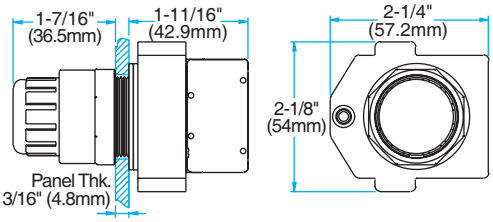

Illuminated Resistor and Dual Input Operators (shown with HIPBCM)

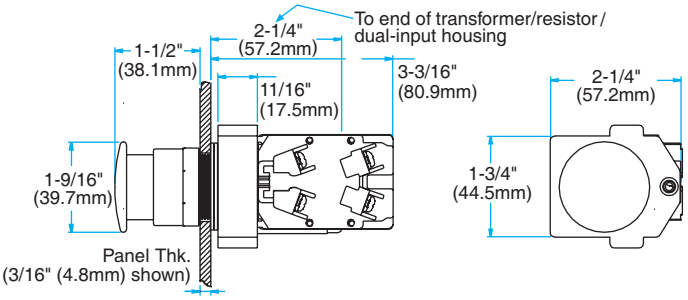

Illuminated Push Button Mounting Bracket

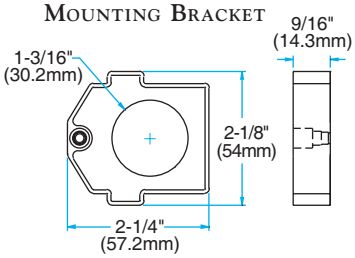

Illuminated Shrouded Mushroom Lens (SIPBCM)

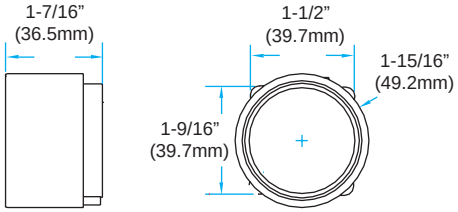

Illuminated Guarded Lens (GIPBC)

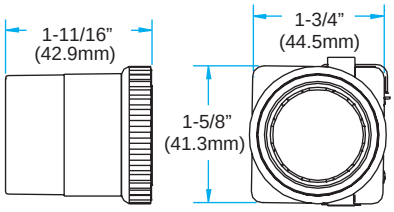

2-POSITION PUSH-PULL MAINTAINED ILLUMINATED H-LINE PUSH BUTTONS

Fully-assembled operators come standard with one 3/16" (4.8mm) and three 1/16" (1.6mm) gaskets.
See mounting gasket specifications chart #1 on page 35.

Illuminated Full Voltage Operator (shown with IMC)

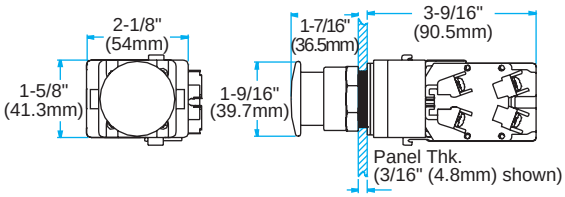

Illuminated Resistor Operator (shown with IMC)

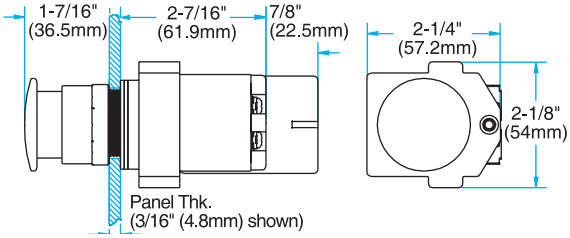

H-LINE PILOT LIGHTS

Fully-assembled operators come standard with one 3/16" (4.8mm) and two 1/16" (1.6mm) gaskets.
See mounting gasket specifications chart #2 on page 35.

Full Voltage Pilot Light Operator (shown with PLL)

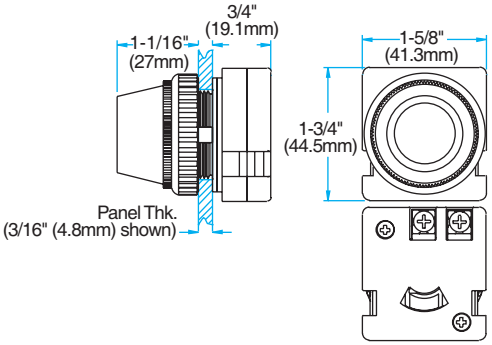

Resistor Pilot Light Operator (shown with PLL)

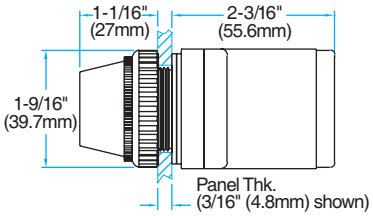

Dual Input Pilot Light Operator (shown with PLL)

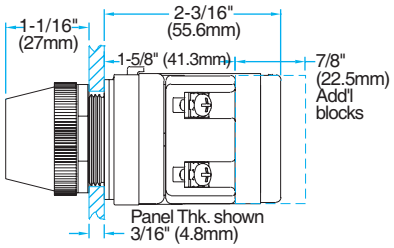

PUSH-TO-TEST H-LINE PILOT LIGHTS

Fully-assembled operators come standard with one 3/16" (4.8mm) and three 1/16" (1.6mm) gaskets.
See mounting gasket specifications chart #2 on page 35.

Full Voltage Push-To-Test Operator (shown with HIPBCM)

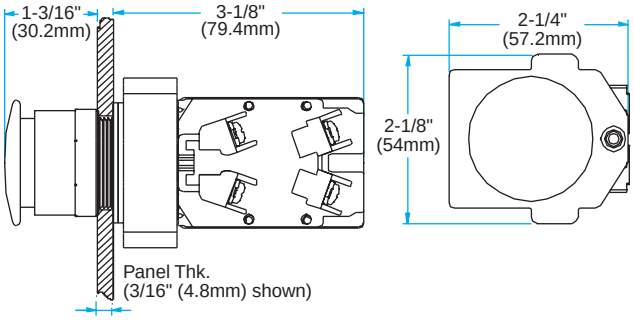

Resistor Push-To-Test Operator (shown with HIPBC)

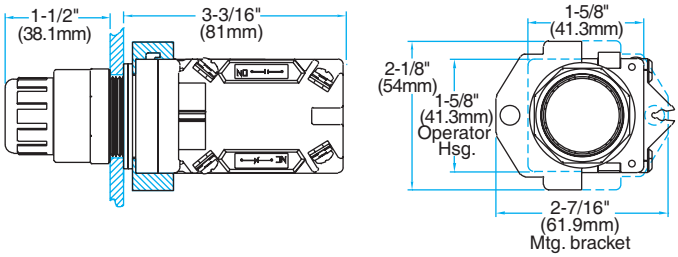

Guarded Lens

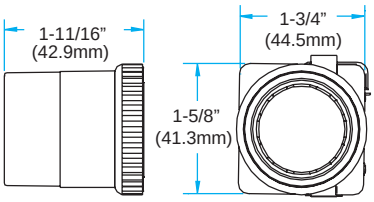

Shrouded Mushroom Lens

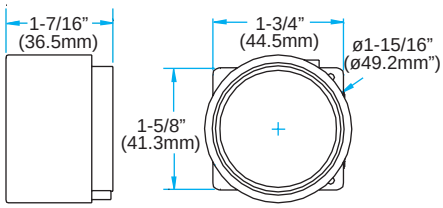

Illuminated Push-To-Test Mounting Bracket

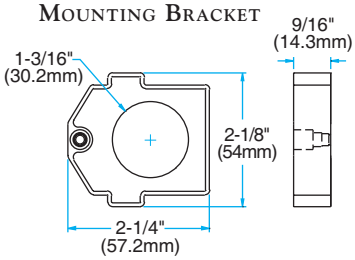

MULTI-VOLTAGE H-LINE PILOT LIGHT

Fully-assembled operators come standard with four 1/16" (1.6mm) gaskets.
See mounting gasket specifications chart #2 on page 35.

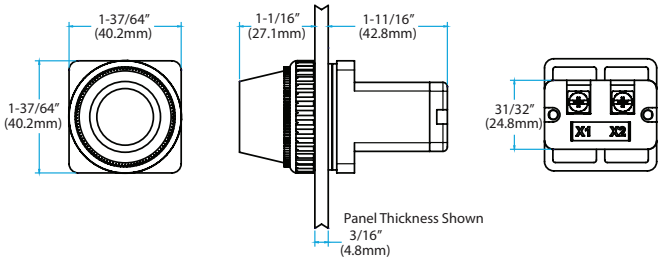

H-LINE SELECTOR SWITCHES

Fully-assembled operators come standard with one 3/16" (4.8mm) and three 1/16" (1.6mm) gaskets.
See mounting gasket specifications chart #3 on page 35.

Selector Switch Operator (shown with standard handle)

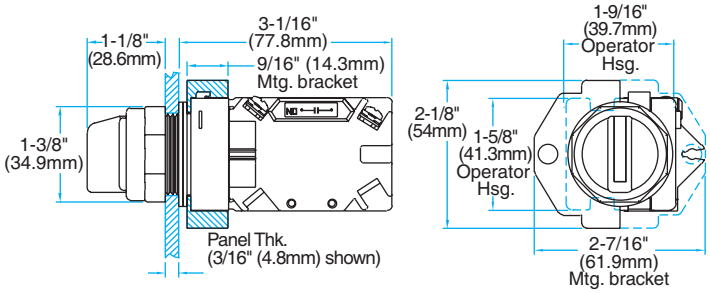

Selector Switch Lever Handle

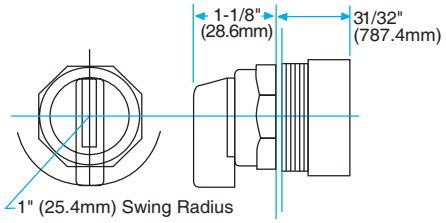

Selector Switch Mounting Bracket

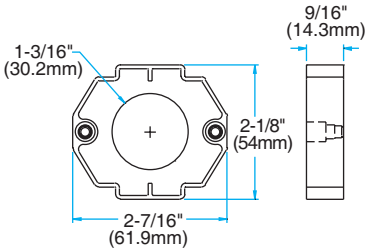

H-LINE CONTACT BLOCKS

Factory Sealed Contact Blocks - CBFS

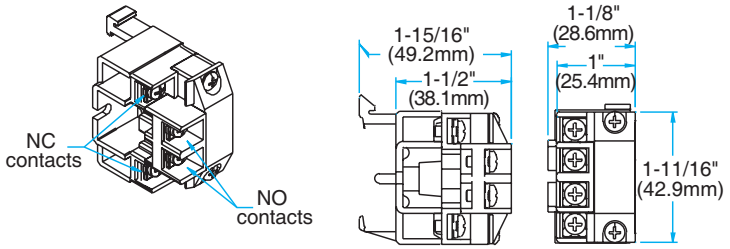

Factory Sealed Contact Blocks - CBFSR

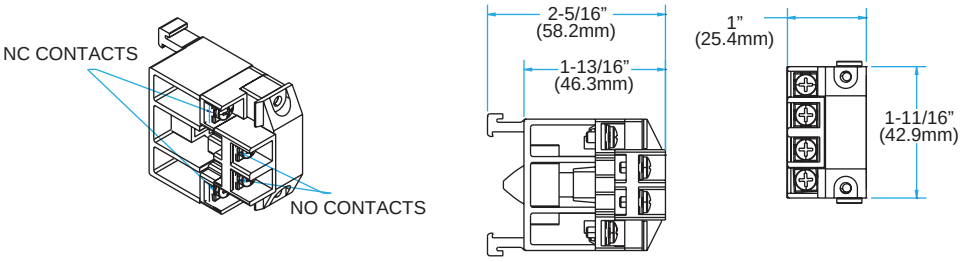

Power Reed, Mid-Power Reed & Medium Logic Reed Contact Blocks

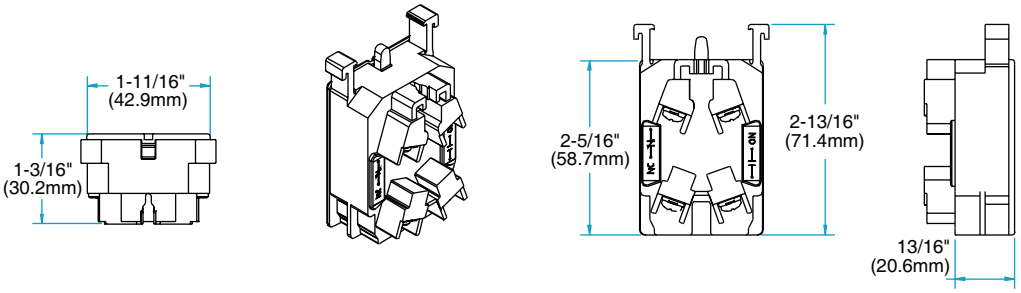

Logic Reed Contact Block

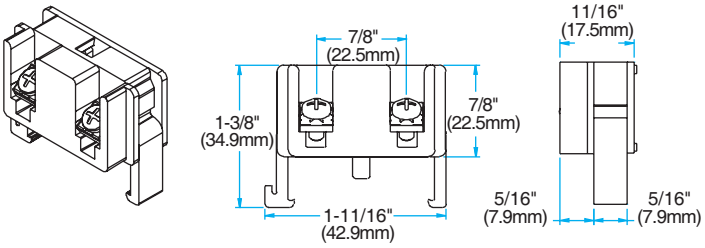

H-LINE RESET PUSH BUTTON

Fully-assembled operators come standard with one 3/16" (4.8mm) and three 1/16" (1.6mm) gaskets.
See mounting gasket specifications chart #3 on page 36.

Reset Push Button

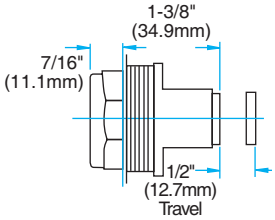

GUARD ATTACHMENT

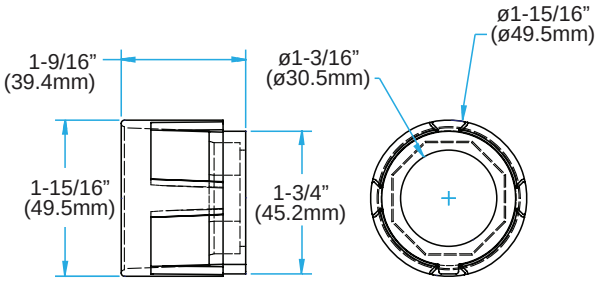

LOCK-OFF ATTACHMENTS

LOAFC

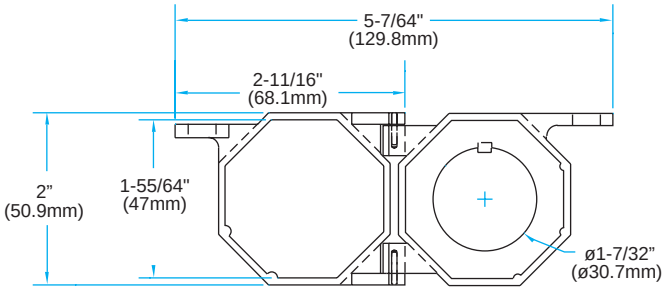

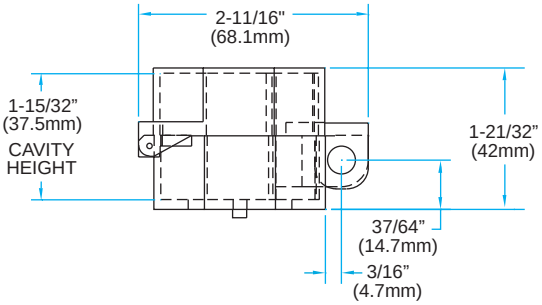

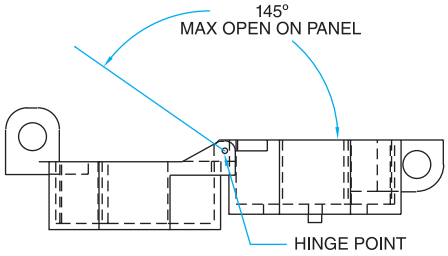

LOAM

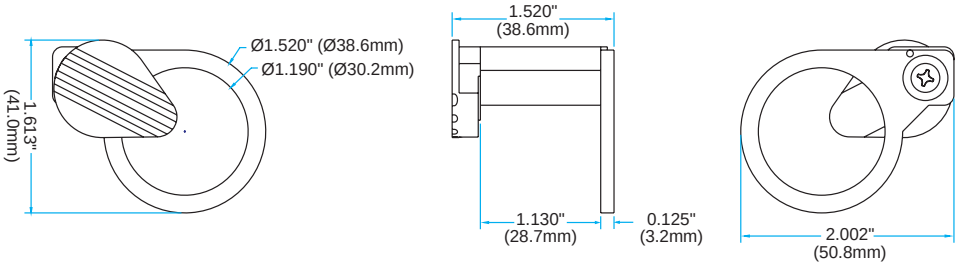

LOCK-OFF ATTACHMENTS

LOAP

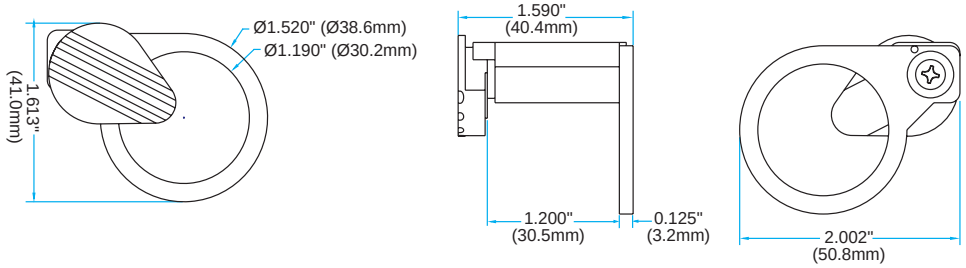

LOAX

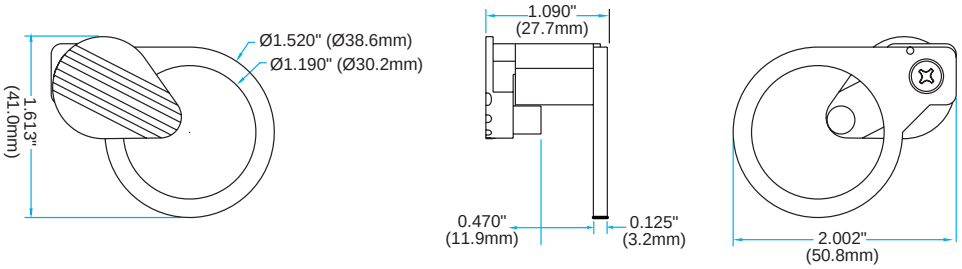

VISIT WWW.C3CONTROLS.COM TO DOWNLOAD CAD DRAWINGS

LEGEND PLATES

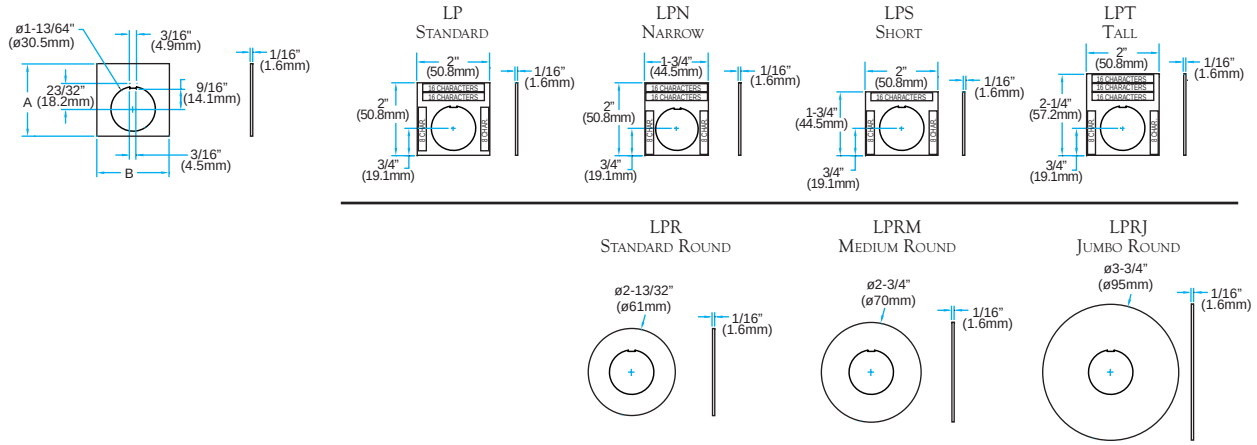

Note: Legend plates feature a tab for optional break-away positioning and can be used in conjunction with the Thrust & Trim Washer accessory.

MOUNTING HOLE PATTERN

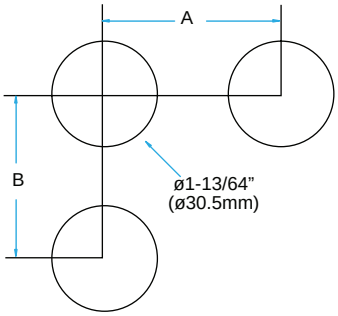

MOUNTING HOLE PATTERN

SPACING	A	B
Minimum	2-7/16" (70mm)	2-1/8" (54mm)
Standard	2-11/16" (68.3mm)	2-3/8" (60.3mm)

MOUNTING GASKETS

MOUNTING GASKETS CHART #1

PANEL THICKNESS IN DECIMALS	# OF GASKETS NEEDED 3/16" (4.8MM)	& 1/16" (1.6MM)
less than .080	1	2
.080 – .132	1	1
.133 – .185	0	3
.186 – .238	0	2
.239 – .291	0	1

NOTE: Remove one 1/16" (1.6mm) gasket when using a LEGEND PLATE.

MOUNTING GASKETS CHART #2

PANEL THICKNESS IN DECIMALS	# OF GASKETS NEEDED 3/16" (4.8MM)	& 1/16" (1.6MM)
less than .080	1	1
.080 – .132	0	3
.133 – .185	0	2
.186 – .238	0	1

NOTE: Remove one 1/16" (1.6mm) gasket when using a legend plate.

MOUNTING GASKETS CHART #3

PANEL THICKNESS IN DECIMALS	# OF GASKETS NEEDED 3/16" (4.8MM)	& 1/16" (1.6MM)
less than .080	1	4
.080 – .132	1	3
.133 – .185	1	2
.186 – .238	1	1
.239 – .291	0	3
.292 – .344	0	2

NOTE: Remove one 1/16" (1.6mm) gasket when using a legend plate.

22MM IEC PILOT DEVICES

c3controls offers the best selection of illuminated and non-illuminated push buttons and selector switches on the market today. We also have a full line of unibody and modular pilot lights, all engineered for superior durability and long life. Check out our multi-voltage LED light module that can be operated at any voltage from 20V to 277V AC or DC. Their modular design and easy-to-create assemblies offer convenience in ordering and assembly. Our line of factory assembled 22mm IEC Compact Control Stations offers the convenience of a single catalog number, shorter control panel bill of material, and easier inventory management.

Section 15

Contact Blocks	4
Push Buttons	6
Special Operators	24
Pilot Lights	26
Selector Switches	31
Compact Control Stations	37
Legend Plates	41
Accessories	44
Specifications	46
Dimensions	48

PROVEN

Conformity to Standards:	Certifications:
PILOT DEVICES	
UL 508	UL File #: E68568 (Guide NKCR, NKCR7)
CSA C22.2 No. 14	
IEC 60947-1, 60947-5-1	CE Marked (per EU Low Voltage Directive 2006/95/EC and RoHS Directive 2011/65/EU)
ASSEMBLED CONTROL STATIONS	
UL 508, 50, 50E	UL File #: E68568 (Guide NKCR, NKCR7)
CSA C22.2 No. 14, 94.2-07	
IEC 60947-5, 60529	CE Marked (per EU Low Voltage Directive 2006/95/EC and RoHS Directive 2011/65/EU)
ENCLOSURES	
UL 50, 50E	UL File #: E470986
CSA C22.2 No. 94.2-07	
IEC 60529	CE Marked (per EU Low Voltage Directive 2006/95/EC and RoHS Directive 2011/65/EU)

Visit www.c3controls.com to download product certifications.

NOTE: The scope (range, description, price, specifications, dimensions, etc.) of the product featured in this section is subject to change without notice. Refer to www.c3controls.com for product updates.

22MM IEC PILOT DEVICES

c3controls offers a comprehensive line of 22mm IEC Pilot Devices. Each product is designed and manufactured to the needs of the machine builder. Check out all the features of our Series 22 IEC below!

THE MOST INNOVATIVE LINE OF AMERICAN-MADE 22MM IEC PILOT DEVICES.	
✓ **Proven**	Our 22mm IEC operators are UL Listed and CE marked meeting global standards requirements.
✓ **Easy to Install**	Our "snap-on" contact blocks are color coded for quick circuit identification and feature 35° angled captive terminal screws and self-lifting pressure plates for fast and easy wiring.
✓ **Quick and Simple**	The latching mechanism enables the user to wire the contact blocks and light modules separate from the operator and outside the confined space of the control panel.
✓ **Low Profile**	The 22mm line assumes the lead in the industry with the shortest depth behind the panel.
✓ **Rugged Design**	Manufactured to be the highest quality—inside and out. With its metal appearance and sleek design, you know you are getting the quality you deserve.
✓ **Visible Certifications**	Our product certifications and electrical ratings are clearly marked on the outside of the contact blocks for easy reference during installation.
✓ **Flexible**	Our contact blocks can be stacked 2 deep and up to 3 across for a total of 6 circuits, providing the flexibility to operate multiple control circuits from a single operator.
✓ **Heavy Duty**	Polyester construction provides superior durability, corrosion resistance, moisture rejection and electrical insulation.
✓ **Convenient**	Reduce inventory with our interchangeable modular design, providing endless options for appropriate operator interface.
✓ **Environmentally Secure**	With 4/4X and IP66 ratings, our 22mm line of pilot devices are built to last and withstand dust, corrosion, ice, and rain.
✓ **36-Month Warranty***	Every product is backed by our 36-Month Warranty—giving you confidence in the quality, reliability, and performance of components designed for the most demanding applications.
✓ **Guaranteed Same-Day Shipping***	Product availability reduces inventory, and improves cash-flow—saving you money. With c3controls any order for standard catalog items received by 6:00pm ET is guaranteed to ship same-day.
✓ **Advantage Pricing**	Our approach to product development, manufacturing, and focus on servicing the OEM and Electrical Equipment Builder reduces cost. The result—the best value in the industry.

*See c3controls Terms & Conditions

> *c3controls' 22mm IEC Multi-Voltage Pilot Lights, along with their outstanding customer and delivery services, give us what we need to maintain a competitive edge.*
>
> Chris Seiler, General Manager • **Fliteway Technologies**

Momentary Push Button

Illuminated E-Stop

Modular Pilot Light

Illuminated Selector Switch

UNIQUE PRODUCT LINE FEATURES

SHORTER DEPTH

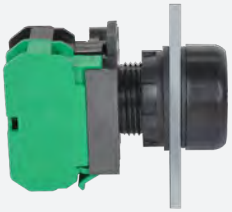

Our compact line saves you valuable space in your control panel with our shorter contact blocks and light modules. We deliver the shortest depth 22mm Pilot Devices engineered in the USA, exceeding the demands of our customers and the industry.

EN418 EMERGENCY STOP

c3controls' maintained push-twist-release operators meet the global compliance standards for EN418 - *Safety of Machinery*, and they feature a unique trigger action and are available in both non-illuminated and illuminated versions.

EXCLUSIVE MULTI-VOLTAGE LIGHTS

Our non-relampable multi-voltage light units—the only U.S. engineered multi-voltage light in the industry!—operate at any voltage from 20V to 277V AC or DC without losing intensity, making them easily interchangeable across multiple applications.

ONE CAM DESIGN

Our single cam design eliminates the need for multiple cam and selector switch configurations, reducing inventory and saving you labor time and costs.

LABOR AND COST SAVINGS

Available in non-illuminated and illuminated versions, our dual-push button operators do the work of two operators in one 22.5mm hole, saving time, labor and space.

COMPACT CONTROL STATIONS

Factory assembly of our 22mm IEC Compact Control Stations provide the convenience of a single catalog number, no assembly required, shorter control panel bill of materials, and easier inventory management.

FIND IT FAST

22mm IEC Pilot Devices

- Certifications
- Specifications
- Dimension Drawings
- Installation Instructions
- Easy to Buy

c3controls.com

SELECT YOUR CONTACT BLOCK

MODULAR CONTACT BLOCK CONFIGURATION

CODE	DESCRIPTION	CONTACT SYMBOL	COLOR	LIST
	SILVER CONTACTS			
WNO	Normally Open Contact Block		Green	$ 8.10
WNC	Normally Closed Contact Block		Red	$ 8.10
WEM	Early Make Contact Block		White	$ 8.10
WDB	Delayed Break Contact Block		Black	$ 8.10
	GOLD PLATED CONTACTS ‡			
WNOG	Normally Open Contact Block ‡		Green	$22.00
WNCG	Normally Closed Contact Block ‡		Red	$22.00
WEMG	Early Make Contact Block ‡		White	$22.00
WDBG	Delayed Break Contact Block ‡		Black	$22.00

STANDARD RATING DESIGNATIONS

A600 (AC) RATING DESIGNATION

A600 (7,200 VA Make and 720 VA Break),
600V AC Maximum
Maximum Continuous Thermal Current, Ith: 10A

Q600 (DC) RATING DESIGNATION

Q600 (69 VA Make and 69 VA Break),
600V DC Maximum
Maximum Continuous Thermal Current, Ith: 2.5A

‡NOTE: Gold plated contacts are not available for same-day shipping. Contact our Customer First Team for lead times and minimum order quantities.

DISCOUNT SCHEDULE E

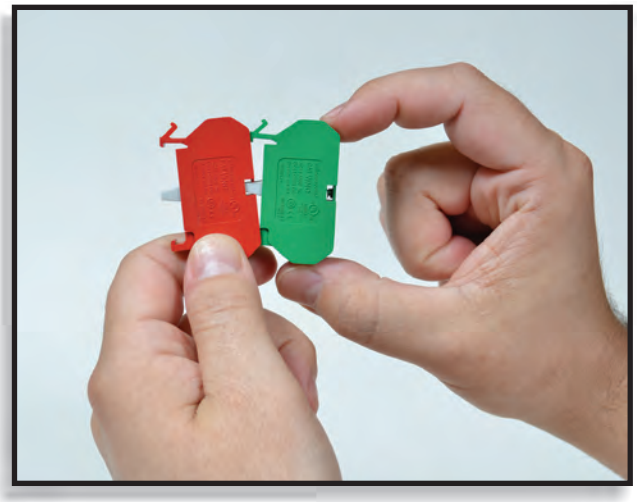

Simple, Fast and Time Saving.

c3controls 22mm IEC modular contact blocks are constructed out of the finest materials ensuring secure assembly at every "snap". Our contact blocks can be stacked 2 deep and up to 3 across for a total of 6 circuits. 35 degree angled captive terminal screws and self-lifting pressure plates make wiring fast and easy. Also, our contact blocks are color coded for quick circuit identification.

Available Contact Blocks for Ordinary Locations

WNO

WNC

WEM

WDB

22mm IEC Contact Blocks

Our contact blocks save you time and money by offering the flexibility to operate multiple control circuits from a single pilot device. This capability includes stacking up to 2 contact blocks deep and up to 3 across providing a total of 6 circuits on most operators in any combination. And, unlike the competition, our standard latching device allows for 3-across contact blocks without the hassle of ordering separate latches. In addition, our "snap-on" contact blocks are color coded for instant circuit identification and take less time to install than it takes to pick up a screwdriver! The heavy-duty construction ensures these contact blocks will remain installed. Our contact blocks are rated A600 (AC), Q600 (DC) and IP20 for finger safe terminations.

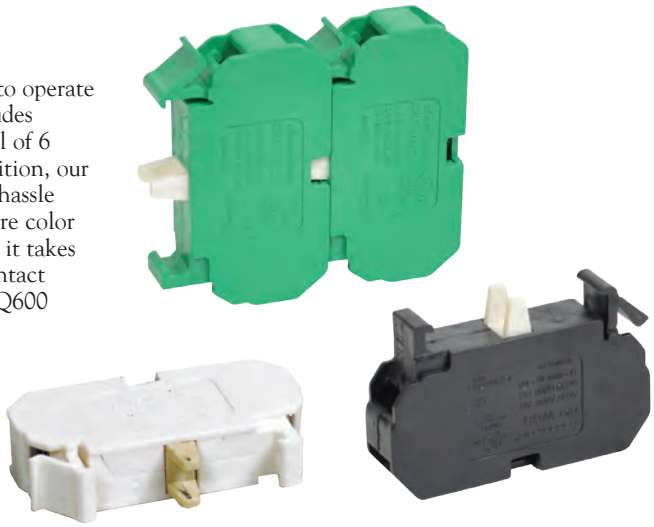

UNIQUE PRODUCT FEATURES

c3controls manufactures the most innovative, user-friendly line of Contact Blocks on the market today!

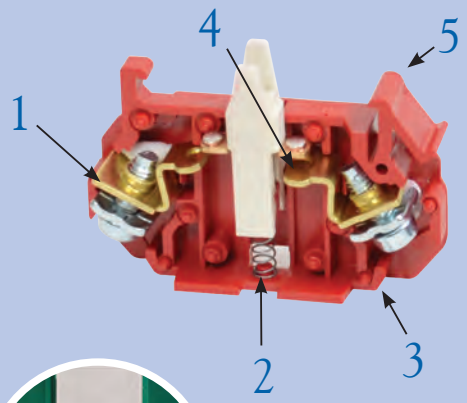

Gold plated contacts are available on standard blocks for dry circuit applications.

1. 35 Degree angled captive terminal screws and self-lifting pressure plates facilitate wiring even when blocks are stacked.
2. Stainless steel spring for protection against corrosion.
3. Color-coded body for quick circuit identification (green = NO, red = NC, white = EM, black = DB).
4. Built-in self-wiping cleaning action and high contact point pressure for low-level switching. Silver contact rivets provide long life on normal control circuits.
5. Single mounting position allows for proper installation everytime and constant terminal position from block to block, reducing installation and wiring time.

IT'S EASY TO BUILD YOUR OWN PUSH BUTTON

Simply pick the code number from each of the sections below and combine them to build your part number.

Momentary Push Buttons (Non-Illuminated)

W22PB – ____ ____ ____ – ____ / ____ / ____
I *II* *III* *IV* *V** *VI** *VII**

Example: To build one of our most popular Push Buttons, the part number would be **W22PB + II + III + IV + V + VI + VII** or **W22PB-FG-10**

*NOTE: Contact block configurations are based on circuit designation. If only two contact blocks are selected, they will be assembled in the left and right positions.

I. OPERATOR TYPE

CODE	DESCRIPTION	LIST
W22PB	Push Button Operator	$10.00

II. BEZEL TYPE

CODE	DESCRIPTION	LIST
(Blank)	Black Polyester (Type 4X)	—
M	Chrome Plated (Type 4X)	$ 3.00
A	Aluminum (Type 4)‡	$ 3.00

III. CAP TYPE

CODE	DESCRIPTION	LIST
F	Flush	—
E	Extended	—
M	Mushroom	$ 8.90
G	Guarded‡	$ 16.00
J	Jumbo Mushroom‡	$ 12.00

IV. CAP COLOR

CODE	DESCRIPTION
K	Black
B	Blue
G	Green
E	Grey
R	Red
W	White
Y	Yellow‡

‡NOTE: Products marked with ‡ are not available for same-day shipping. Contact our Customer First Team for lead times and minimum order quantities.

V. CONTACT BLOCK CONFIGURATION (LEFT SIDE)

CODE	DESCRIPTION	LIST
(Blank)	Operator without Contact Blocks	—
10	1 Normally Open Contact Block	$ 8.10
01	1 Normally Closed Contact Block	$ 8.10
E	1 Early Make Contact Block	$ 8.10
D	1 Delayed Break Contact Block	$ 8.10
20	2 Normally Open Contact Blocks	$16.20
02	2 Normally Closed Contact Blocks	$16.20
11	1 Normally Open and 1 Normally Closed Contact Blocks	$16.20

VI. CONTACT BLOCK CONFIGURATION (CENTER)

(USE CHART V FROM ABOVE)

VII. CONTACT BLOCK CONFIGURATION (RIGHT SIDE)

(USE CHART V FROM ABOVE)

***LEGEND PLATES** in almost any size & color are available for same day shipping. See pages 41-43 for complete selection.*

Some of Our Popular Configurations:

DISCOUNT SCHEDULE E

MOMENTARY NON-ILLUMINATED PUSH BUTTON OPERATORS

		FLUSH CAP		EXTENDED CAP	
	CAP COLOR	CATALOG NUMBER	LIST	CATALOG NUMBER	LIST
1 NO	Black	W22PB-FK-10	$18.10	W22PB-EK-10	$18.10
	Green	W22PB-FG-10	$18.10	W22PB-EG-10	$18.10
	Red	W22PB-FR-10	$18.10	W22PB-ER-10	$18.10
1 NC	Black	W22PB-FK-01	$18.10	W22PB-EK-01	$18.10
	Green	W22PB-FG-01	$18.10	W22PB-EG-01	$18.10
	Red	W22PB-FR-01	$18.10	W22PB-ER-01	$18.10
1 NO & 1 NC	Black	W22PB-FK-10/01	$26.20	W22PB-EK-10/01	$26.20
	Green	W22PB-FG-10/01	$26.20	W22PB-EG-10/01	$26.20
	Red	W22PB-FR-10/01	$26.20	W22PB-ER-10/01	$26.20

Mix and Match Any Bezel, Color and Momentary Non-Illuminated Push Button Cap

Flush — Extended — Guarded — Mushroom (40mm) — Jumbo Mushroom (60mm) — Polyester (Type 4X) — Chrome (Type 4X) — Aluminum (Type 4)

22mm IEC Momentary Non-Illuminated Push Buttons

Our line of 22mm IEC Momentary Non-Illuminated Push Buttons feature contact blocks that are stackable up to 2 deep and 3 across for a total of 6 circuits per operator. All c3controls 22mm IEC operators are UL Listed and CE marked and are rated Type 4/4X as standard for watertight and corrosion resistance. In addition, operators are also listed for Type 1, 2, 3, 3R, 12, 13 and IP66 applications, and meet global standards requirements.

Product features include:

- Polyester construction for superior corrosion resistance, moisture rejection and electrical insulation.
- Compact size, only 45.6mm (1-57/64") deep from the front of the panel.
- Six color options are available in three different cap types.
- Removable latching device allows for easy installation and wiring for up to three contact blocks across.
- Modular contact blocks use M3.5 plated captive steel terminal screws with self-lifting captive wire clamps that accommodate 0.5 ~ 4mm^2(#22 ~ #12 AWG) wires (one or two wires per terminal) and have IP20 guarded terminals to prevent accidental contact with live parts.
- Operators conveniently mount in a round 22.5mm (7/8") hole that is directly interchangeable with competitors units and eliminates the labor required for notching.

UNIQUE PRODUCT FEATURES

Our revolutionary U-cup seal is infused with a Teflon coating to eliminate cracking when exposed to harsh conditions such as heat, dryness and sunlight. The U-Cup seal rides easily along the stroker and keeps water, oils, dust and other corrosive particles in the air away from the contact blocks. The U-Cup seal also acts like a squeegee and forms a permanent watertight seal that meets or exceeds Type 4/4X.

IT'S EASY TO BUILD YOUR OWN PUSH BUTTON

Simply pick the code number from each of the sections below and combine them to build your part number.

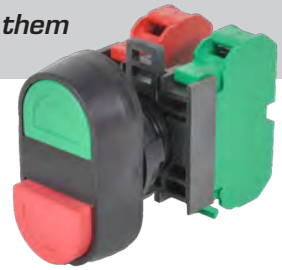

Momentary Dual Push Buttons (Non-Illuminated)

W22DPB – ____ ____ ____ ____ – ____ / ____
I II III IV V VI VII**

Example: To build one of our most popular Push Buttons, the part number would be **W22DPB + II + III + IV + V + VI + VII** or **W22DPB-ERFG-01/10**

*NOTE: Contact block mounted on left side is operated by the bottom push button and contact block mounted on right side is operated by the top push button.

I. OPERATOR TYPE

CODE	DESCRIPTION	LIST
W22DPB	Dual Push Button	$20.00

II. CAP TYPE (BOTTOM)

CODE	DESCRIPTION
F	Flush
E	Extended

III. CAP COLOR (BOTTOM)

CODE	DESCRIPTION
G	Green
R	Red
K	Black‡
B	Blue‡
E	Grey‡
W	White‡
Y	Yellow‡

IV. CAP TYPE (TOP)

CODE	DESCRIPTION
F	Flush
E	Extended

V. CAP COLOR (TOP)

CODE	DESCRIPTION
G	Green
R	Red
K	Black‡
B	Blue‡
E	Grey‡
W	White‡
Y	Yellow‡

‡NOTE: Products marked with ‡ are not available for same-day shipping. Contact our Customer First Team for lead times and minimum order quantities.

VI. CONTACT BLOCK CONFIGURATION (LEFT SIDE) — OPERATED BY THE BOTTOM PUSH BUTTON

CODE	DESCRIPTION	LIST
(Blank)	Operator without Contact Blocks	—
10	1 Normally Open Contact Block	$ 8.10
01	1 Normally Closed Contact Block	$ 8.10
E	1 Early Make Contact Block	$ 8.10
D	1 Delayed Break Contact Block	$ 8.10
20	2 Normally Open Contact Blocks	$16.20
02	2 Normally Closed Contact Blocks	$16.20
11	1 Normally Open and 1 Normally Closed Contact Blocks	$16.20

VII. CONTACT BLOCK CONFIGURATION (RIGHT SIDE) — OPERATED BY THE TOP PUSH BUTTON

(USE CHART VI FROM ABOVE)

LEGEND PLATES *for Dual Push Button operators are available for same day shipping. See pages 41-43 for complete selection.*

DISCOUNT SCHEDULE E

Some of Our Popular Configurations:

MOMENTARY NON-ILLUMINATED DUAL PUSH BUTTONS				
CONTACT SYMBOL	CONTACT BLOCK MOUNTING POSITION	CAP COLOR	EXTENDED RED (BOTTOM) FLUSH GREEN (TOP)	LIST
1 NC & 1 NO	Left Right	Red/Green	W22DPB-ERFG-01/10	$36.20

Mix and Match Any Color and Dual Push Button Cap

Flush/Flush — Extended/Flush — Flush/ Extended

22mm IEC Momentary Non-Illuminated Dual Push Buttons

Our line of 22mm IEC Momentary Non-Illuminated Push Buttons feature contact blocks that are stackable up to 2 deep and 3 across for a total of 6 circuits per operator. All c3controls 22mm IEC operators are UL Listed and CE marked and are rated Type 4/4X as standard for watertight and corrosion resistance. In addition, operators are also listed for Type 1, 2, 3, 3R, 12, 13 and IP66 applications, and meet global standards requirements.

Product features include:

- Polyester construction for superior corrosion resistance, moisture rejection and electrical insulation.
- Two color options are available in both flush and extended caps.
- The Dual Push Button design incorporates all the features and advantages of the Series 22 IEC products.
- Removable latching device allows for easy installation and wiring of contact blocks.
- An illuminated version is also available, see pages 18 & 19.
- Modular contact blocks use M3.5 plated captive steel terminal screws with self-lifting captive wire clamps that accommodate 0.5 ~ 4mm^2(#22 ~ #12 AWG) wires (one or two wires per terminal) and have IP20 guarded terminals to prevent accidental contact with live parts.
- Operators conveniently mount in a round 22.5mm (7/8") hole that is directly interchangeable with competitors units and eliminates the labor required for notching.

UNIQUE PRODUCT FEATURES

Labor & Cost Savings

Combine the functionality of two operators in one 22.5mm (7/8") hole—saving time, labor and space!

Environmentally Secure

The seal acts like a squeegee and forms a permanent watertight seal that meets Type 4/4X and IP66 without a rubber boot.

IT'S EASY TO BUILD YOUR OWN PUSH BUTTON

Simply pick the code number from each of the sections below and combine them to build your part number.

Maintained Push Buttons (Non-Illuminated)

2-Position Push-Pull

W22PP – ____ ____ ____ – ____ / ____ / ____

I II III IV V VI* VII**

Example: To build one of our most popular Push Buttons, the part number would be **W22PP + II + III + IV + V + VI + VII** or **W22PP-MG-10**

*NOTE: Contact block configurations are based on circuit designation. If only two contact blocks are selected, they will be assembled in the left and right positions.

I. OPERATOR TYPE/FUNCTION

CODE	DESCRIPTION	LIST
W22PP	Push-Pull Maintained	$ 27.00

II. BEZEL TYPE

CODE	DESCRIPTION	LIST
(Blank)	Black Polyester (Type 4X)	—
M	Chrome Plated (Type 4X)	$ 3.00
A	Aluminum (Type 4)‡	$ 3.00

III. CAP TYPE

CODE	DESCRIPTION	LIST
M	Mushroom	—
J	Jumbo Mushroom‡	$ 3.00

IV. CAP COLOR

CODE	DESCRIPTION
G	Green
R	Red
K	Black‡
B	Blue‡
E	Grey‡
W	White‡
Y	Yellow‡

V. CONTACT BLOCK CONFIGURATION (LEFT SIDE)

CODE	DESCRIPTION	LIST
(Blank)	Operator without Contact Blocks	—
10	1 Normally Open Contact Block	$ 8.10
01	1 Normally Closed Contact Block	$ 8.10
E	1 Early Make Contact Block	$ 8.10
D	1 Delayed Break Contact Block	$ 8.10
20	2 Normally Open Contact Blocks	$ 16.20
02	2 Normally Closed Contact Blocks	$ 16.20
11	1 Normally Open and 1 Normally Closed Contact Blocks	$ 16.20

VI. CONTACT BLOCK CONFIGURATION (CENTER)

(USE CHART V)

VII. CONTACT BLOCK CONFIGURATION (RIGHT SIDE)

(USE CHART V)

DISCOUNT SCHEDULE **E**

‡NOTE: Products marked with ‡ are not available for same-day shipping. Contact our Customer First Team for lead times and minimum order quantities.

O = OPEN X = CLOSED

MAINTAINED IN/MAINTAINED OUT

1 CIRCUIT (01)			2 CIRCUIT (10/01)			2 CIRCUIT (01/01)		
	OUT	IN		OUT	IN		OUT	IN
NC	X	O	NC	X	O	NC	X	O
			NO	O	X	NC	X	O

The 2-Position Push-Pull is maintained in both the push and pull positions. The primary application is "push" to "stop" and "pull" to "start".

Mix and Match Any Bezel, Color and Push-Pull Maintained Non-Illuminated Cap

Mushroom (40mm)

Jumbo Mushroom (60mm)

Polyester (Type 4X)

Chrome (Type 4X)

Aluminum (Type 4)

22mm IEC Maintained Non-Illuminated Push Buttons

The most rugged Emergency Stop in the Industry!

If you are looking for a 22mm heavy-duty emergency stop, look no further. The c3controls 22mm IEC Emergency Stop Push Button is the best in the industry. These operators are manufactured with polyester construction for superior corrosion resistance, moisture rejection and electrical insulation. The solid brass detent mechanism ensures safe circuit interruption every time. All c3controls 22mm IEC operators are UL Listed and CE marked and are rated Type 4/4X as standard for watertight and corrosion resistance. In addition, operators are also listed for Type 1, 2, 3, 3R, 12, 13 and IP66 applications, and meet global standards requirements.

Product features include:

- Compact size, only 45.6mm (1-51/64") deep from the front of the panel.
- Direct drive contacts feature a mechanical linkage from the operator to ensure contact separation when actuated, even if the contacts have lightly welded.
- Removable latching device allows for easy installation and wiring for up to three contact blocks across.
- Modular contact blocks use M3.5 plated captive steel terminal screws with self-lifting captive wire clamps to accommodate 0.5 ~ 4mm^2 (#22 ~ #12 AWG) wires (one or two wires per terminal) and have IP20 guarded terminals to prevent accidental contact with live parts.
- Contact blocks are stackable up to 2 deep and 3 across for a total of 6 circuits per operator.
- Operators conveniently mount in a round 22.5mm (7/8") hole that is directly interchangeable with competitors units and eliminates the labor required for notching.

UNIQUE PRODUCT FEATURES

We Put The Metal On The Inside — Where It Counts!

c3controls Emergency Stops contain a solid brass detent mechanism and are the best-engineered, most reliable heavy-duty emergency stop buttons in the world. This rugged design ensures reliable operation in emergency applications, providing safe interruption of circuits, and much longer life when compared to any competitor's product.

Some of Our Popular Configurations:

2-POSITION PUSH-PULL MAINTAINED NON-ILLUMINATED OPERATORS

		MUSHROOM CAP	
	CAP COLOR	CATALOG NUMBER	LIST
1 NO	Green	W22PP-MG-10	$35.10
1 NC	Red	W22PP-MR-01	$35.10

IT'S EASY TO BUILD YOUR OWN PUSH BUTTON

Simply pick the code number from each of the sections below and combine them to build your part number.

Maintained Push Buttons (Non-Illuminated)
3-Position Push-Pull

W22PP 3A ____ – ____ ____ – ____ / ____ / ____
I II III IV V VI VII VIII

Example: To build one of our most popular Push Buttons, the part number would be **W22PP + 3A + III + IV + V + VI + VII + VIII or W22PP3A-MR-10/01**

I. OPERATOR TYPE

CODE	DESCRIPTION	LIST
W22PP	Push-Pull Maintained	$27.00

II. OPERATOR FUNCTION

CODE	DESCRIPTION
3A	Momentary Out, Maintained Center, Maintained In

III. BEZEL TYPE

CODE	DESCRIPTION	LIST
(Blank)	Black Polyester (Type 4X)	—
A	Aluminum (Type 4)‡	$3.00

IV. CAP TYPE

CODE	DESCRIPTION	LIST
M	Mushroom	—
J	Jumbo Mushroom‡	$4.10

V. CAP COLOR

CODE	DESCRIPTION
R	Red
K	Black‡
B	Blue‡
G	Green‡
E	Grey‡
W	White‡
Y	Yellow‡

VI. CONTACT BLOCK CONFIGURATION (LEFT SIDE)

CODE	DESCRIPTION	LIST
(Blank)	Operator without Contact Blocks	—
10	1 Normally Open Contact Block	$ 8.10
01	1 Normally Closed Contact Block	$ 8.10
E	1 Early Make Contact Block	$ 8.10
D	1 Delayed Break Contact Block	$ 8.10
20	2 Normally Open Contact Blocks	$ 16.20
02	2 Normally Closed Contact Blocks	$ 16.20
11	1 Normally Open and 1 Normally Closed Contact Blocks	$ 16.20

VII. CONTACT BLOCK CONFIGURATION (CENTER)

(USE CHART VI FROM ABOVE)

VIII. CONTACT BLOCK CONFIGURATION (RIGHT SIDE)

(USE CHART VI FROM ABOVE)

DISCOUNT SCHEDULE **E**

O = OPEN X = CLOSED

MOMENTARY OUT, MAINTAINED CENTER, MAINTAINED IN

	OUT	CENTER	IN
NC	X	O	O
DB	X	X	O
NO	O	O	X
EM	O	X	X

‡NOTE: Products marked with ‡ are not available for same-day shipping. Contact our Customer First Team for lead times and minimum order quantities.

Available Cap Types and Colors For 3-Position Maintained Non-Illuminated Push Buttons

Mushroom (40mm) — Jumbo Mushroom (60mm)

22mm IEC Maintained Non-Illuminated Push Buttons

The most rugged Emergency Stop in the Industry!

All c3controls 22mm IEC operators are UL Listed and CE marked and are rated Type 4/4X as standard for watertight and corrosion resistance. In addition, operators are also listed for Type 1, 2, 3, 3R, 12, 13 and IP66 applications, and meet global standards requirements.

Product features include:

- Heavy-duty polyester construction for excellent durability, superior corrosion resistance, moisture rejection, and electrical insulation.
- Compact size, only 45.6mm (1-51/64") deep from the front of the panel.
- Removable latching device allows for easy installation and wiring for up to three contact blocks across.
- Modular contact blocks use M3.5 plated captive steel terminal screws with self-lifting captive wire clamps that accommodate 0.5 ~ 4mm^2 (#22 ~ #12 AWG)) wires (one or two wires per terminal) and have IP20 guarded terminals to prevent accidental contact with live parts.
- Operators conveniently mount in a round 22.5mm (7/8") hole that is directly interchangeable with competitors units and eliminates the labor required for notching.

UNIQUE PRODUCT FEATURES

We Put The Metal On The Inside Where It Counts - For Superior Performance In Emergency Stop Circuit Applications!

c3controls Emergency Stops contain a solid brass detent mechanism and are the best-engineered, most reliable heavy-duty emergency stop buttons in the world. This rugged design ensures reliable operation in emergency applications, providing safe interruption of circuits, and much longer life when compared to any competitor's product. Direct drive contacts feature a mechanical linkage from the operator to ensure contact separation when actuated, even if the contacts have lightly welded.

IT'S EASY TO BUILD YOUR OWN PUSH BUTTON

Simply pick the code number from each of the sections below and combine them to build your part number.

Maintained Emergency Stop Push Buttons (Non-Illuminated) 2-Position Push-Twist Release

W22PTR – ____ ____ ____ – ____ / ____ / ____

I II III IV V VI* VII**

*NOTE: Contact block configurations are based on circuit designation. If only two contact blocks are selected, they will be assembled in the left and right positions.

Example: To build one of our most popular Push Buttons, the part number would be W22PTR + II + III + IV + V + VI + VII or W22PTR-YMR-01/10

I. OPERATOR TYPE

CODE	DESCRIPTION	LIST
W22PTR	Push-Twist Release	$31.00

II. HOUSING COLOR

CODE	DESCRIPTION	LIST
(Blank)	Black	—
Y	Yellow*	$ 3.00

*NOTE: A yellow housing with a red mushroom cap must be used to construct an EN418 Emergency Stop Push Button.

III. CAP TYPE

CODE	DESCRIPTIO	LIST
M	Mushroom	—
J	Jumbo Mushroom‡	$4.10

IV. CAP COLOR

CODE	DESCRIPTION
R	Red
K	Black‡
B	Blue‡
G	Green‡
Y	Yellow‡

V. CONTACT BLOCK CONFIGURATION (LEFT SIDE)

CODE	DESCRIPTION	LIST
(Blank)	Operator without Contact Blocks	—
10	1 Normally Open Contact Block	$ 8.10
01	1 Normally Closed Contact Block	$ 8.10
E	1 Early Make Contact Block	$ 8.10
D	1 Delayed Break Contact Block	$ 8.10
20	2 Normally Open Contact Blocks	$ 16.20
02	2 Normally Closed Contact Blocks	$ 16.20
11	1 Normally Open and 1 Normally Closed Contact Blocks	$ 16.20

VI. CONTACT BLOCK CONFIGURATION (CENTER)

(USE CHART V)

VII. CONTACT BLOCK CONFIGURATION (RIGHT SIDE)

(USE CHART V)

The linear push-off twist-to-release style operator requires a "twist" for the "out" or "on" position and a linear "push" for the "in" or "off" position. The twist mushroom cap is marked with arrows identifying the direction for the twist release.

DISCOUNT SCHEDULE **E**

‡NOTE: Products marked with ‡ are not available for same-day shipping. Contact our Customer First Team for lead times and minimum order quantities.

O = OPEN X = CLOSED

MAINTAINED IN/MAINTAINED OUT

1 CIRCUIT (01)			2 CIRCUIT (10/01)			2 CIRCUIT (01/01)		
	OUT	IN		OUT	IN		OUT	IN
NC	X	O	NC	X	O	NC	X	O
			NO	O	X	NC	X	O

Mix and Match Any Color and Push-Twist Release Maintained Non-Illuminated Cap

Twist Mushroom (40mm)

Twist Jumbo Mushroom (60mm)

22mm IEC Maintained Non-Illuminated Emergency Stop Push Buttons

Our 22mm IEC Maintained Non-Illuminated Push-Twist Release Push Buttons rugged design ensures reliable operation in emergency stop applications, providing safe interruption of circuits. The operators provide a trigger action function with direct drive contacts meeting global standards for emergency stop buttons. Contact blocks can be stacked up to 2 deep and 3 across for a total of 6 circuits per operator. All c3controls 22mm IEC operators are UL Listed and CE marked and are rated Type 4/4X as standard for watertight and corrosion resistance. In addition, operators are also listed for Type 1, 2, 3, 3R, 12, 13 and IP66 applications, and meet global standards requirements.

Product features include:

- Polyester construction for superior corrosion resistance, moisture rejection and electrical insulation.
- Meets global standards for Emergency Stop buttons.
- An illuminated version is also available, see pages 22 & 23.
- Modular contact blocks use M3.5 plated captive steel terminal screws with self-lifting captive wire clamps that accommodate 0.5 ~ 4mm^2 (#22 ~ #12 AWG) wires (one or two wires per terminal) and have IP20 guarded terminals to prevent accidental contact with live parts.
- Operators conveniently mount in a round 22.5mm (7/8") hole that is directly interchangeable with competitors units and eliminates the labor required for notching.

UNIQUE PRODUCT FEATURES

Ergonomically Designed

Cone shaped head with knurls fit easily into your hand for a comfortable operation.

Ease of Visibility

Molded bold white arrows (black arrows on yellow and white caps) indicate the 45° twist-to-release operation for easy visibility over the life of the product.

EN418 Emergency Stop Operators

c3controls maintained non-illuminated push-twist-release operators were designed to meet EN418 Standards for "Safety of Machinery." Constructing an EN418 Emergency Stop Push Button from our standard operators is easy—simply select a red mushroom cap with a yellow housing.

- Ergonomically designed red mushroom cap (40mm (1-9/16")) with white arrows for quick identification and ease of control.
- Trigger Action Function—Operator requires dedicated push action to operate contacts, eliminating accidental operation and meeting global standards.
- Latching mechanism which is activated when the actuator of the device is depressed to a certain point and the contacts open.
- The anti-teasing function guarantees the contacts will remain open until a person manually intervenes and releases the actuator.
- The direct drive design mechanically links the mushroom cap operator and contacts to drive the electrical contacts open. The trigger action makes the Emergency Stop operator more than a push button.
- Red operator, yellow housing, and molded white directional arrows are all designed to meet global standards for Emergency Stop operators.

IT'S EASY TO BUILD YOUR OWN PUSH BUTTON

Simply pick the code number from each of the sections below and combine them to build your part number.

Momentary Push Buttons (Illuminated)

W22IPB – ____ ____ ____ – ____ ____ – ____ / ____
I *II* *III* *IV* *V* *VI* *VII** *VIII**

Example: To build one of our most popular Push Buttons, the part number would be **W22IPB + II + III + IV + V + VI + VII + VIII** or **W22IPB-FG-FM120LG-10**

*NOTE: Contact block configurations are based on circuit designation and light module unit.

I. OPERATOR TYPE

CODE	DESCRIPTION	LIST
W22IPB	Illuminated Push Button	$16.00

II. BEZEL TYPE

CODE	DESCRIPTION	LIST
(Blank)	Black Polyester (Type 4X)	—
M	Chrome Plated (Type 4X)	$ 3.00
A	Aluminum (Type 4)‡	$ 3.00

III. LENS TYPE

CODE	DESCRIPTION	LIST
F	Flush	—
E	Extended	—
G	Guarded‡	$ 26.00
M	Mushroom‡	$ 14.00

IV. LENS COLOR

CODE	DESCRIPTION
A	Amber
B	Blue
G	Green
R	Red
W	White
C	Clear‡
Y	Yellow‡

V. LIGHT MODULE/VOLTAGE

CODE	DESCRIPTION	LIST
	FULL VOLTAGE	
FM12	12V AC/DC	$12.00
FM24	24V AC/DC	$12.00
FM120	120V AC/DC	$12.00
	MULTI-VOLTAGE, NON-RELAMPABLE	
MVD	20-277V AC or DC	$37.00

VI. LED LAMP COLOR

CODE	DESCRIPTION	LIST
	FOR FULL VOLTAGE MODULES	
LA	Amber	$14.00
LB	Blue	$14.00
LG	Green	$14.00
LR	Red	$14.00
LW	White	$14.00
	FOR MULTI-VOLTAGE MODULE	
LW	White	—
NL	**No Lamp**	– $ 1.80

VII. CONTACT BLOCK CONFIGURATION (LEFT SIDE)

CODE	DESCRIPTION	LIST
(Blank)	Operator without Contact Blocks	—
10	1 Normally Open Contact Block	$ 8.10
01	1 Normally Closed Contact Block	$ 8.10
E	1 Early Make Contact Block	$ 8.10
D	1 Delayed Break Contact Block	$ 8.10
20	2 Normally Open Contact Blocks	$ 16.20
02	2 Normally Closed Contact Blocks	$ 16.20
11	1 Normally Open and 1 Normally Closed Contact Blocks	$ 16.20

VIII. CONTACT BLOCK CONFIGURATION (RIGHT SIDE)

(USE CHART VII FROM ABOVE)

DISCOUNT SCHEDULE **E**

SEE PAGE 45 FOR LAMP REPLACEMENT CHART AND PAGE 46 FOR LAMP TECHNICAL DATA.

‡NOTE: Products marked with ‡ are not available for same-day shipping. Contact our Customer First Team for lead times and minimum order quantities.

MIX AND MATCH ANY BEZEL, COLOR AND MOMENTARY ILLUMINATED PUSH BUTTON LENS

22mm IEC Momentary Illuminated Push Buttons

Our 22mm IEC Momentary Illuminated Push Buttons feature contact blocks that are stackable up to 2 deep and 2 across for a total of 4 circuits per operator, depending on the light unit module. All c3controls 22mm IEC operators are UL Listed and CE marked and are rated Type 4/4X as standard for watertight and corrosion resistance. In addition, operators are also listed for Type 1, 2, 3, 3R, 12, 13 and IP66 applications, and meet global standards requirements.

Product features include:

- Available state-of-the-art non-relampable multi-voltage light module with super-bright LED can be operated at any voltage from 20V to 277V AC or DC.
- Polyester construction for superior corrosion resistance, moisture rejection and electrical insulation.
- Full voltage light modules use miniature bayonet base lamps to provide reliable lamp secureness.
- c3controls LED lamp design life is 100,000 hours – that's 11.4 years!
- Removable latching device allows for easy installation and wiring for up to two contact blocks across.
- Compact size, only 45.6mm (1-51/64") deep from the front of the panel.
- Modular contact blocks use M3.5 plated captive steel terminal screws with self-lifting captive wire clamps that accommodate 0.5 ~ 4mm^2 (#22 ~ #12 AWG) wires (one or two wires per terminal) and have IP20 guarded terminals to prevent accidental contact with live parts.
- Operators conveniently mount in a round 22.5mm (7/8") hole that is directly interchangeable with competitors units and eliminates the labor required for notching.

UNIQUE PRODUCT FEATURES

- Our rugged Lexan™ lenses provide better visibility and can resist high impact for reliable performance in most environments, even in high ambient temperatures.
- Our lenses feature a diffuser insert that provides outstanding light output from all angles, along with a thin O-ring which provides a watertight seal to meet Type 4/4X standards.
- Multi-Voltage and Full Voltage light units available in a wide range of voltages to meet your specific needs.

Some of Our Popular Configurations:

MOMENTARY ILLUMINATED PUSH BUTTON OPERATORS

		FLUSH LENS		EXTENDED LENS	
	LENS COLOR	CATALOG NUMBER	LIST	CATALOG NUMBER	LIST
Full Voltage	Amber	W22IPB-FA-FM120LA-10/01	$58.20	W22IPB-EA-FM120LA-10/01	$58.20
	Green	W22IPB-FG-FM120LG-10	$50.10	W22IPB-EG-FM120LG-10	$50.10
	Red	W22IPB-FR-FM120LR-01	$50.10	W22IPB-ER-FM120LR-01	$50.10
Multi-Voltage	Amber	W22IPB-FA-MVDLW-10/01	$69.20	W22IPB-EA-MVDLW-10/01	$69.20
	Green	W22IPB-FG-MVDLW-10	$61.10	W22IPB-EG-MVDLW-10	$61.10
	Red	W22IPB-FR-MVDLW-01	$61.10	W22IPB-ER-MVDLW-01	$61.10

IT'S EASY TO BUILD YOUR OWN PUSH BUTTON

Simply pick the code number from each of the sections below and combine them to build your part number.

Momentary Dual Push Buttons (Illuminated)

W22IDPB – ____ ____ ____ ____ – ____ – ____ ____ – ____ / ____

I II III IV V VI VII VIII IX* X*

Example: To build one of our most popular Push Buttons, the part number would be
W22IDPB + II + III + IV + V + VI + VII + VIII + IX + X or **W22IDPB-ERFG-C-MVDLW-01/10**

*NOTE: Contact block mounted on left side is operated by the bottom push button and contact block mounted on right side is operated by the top push button.

I. OPERATOR TYPE

CODE	DESCRIPTION	LIST
W22IDPB	Illuminated Dual Push Button	$20.00

II. CAP TYPE (BOTTOM)

CODE	DESCRIPTION
F	Flush
E	Extended

III. CAP COLOR (BOTTOM)

CODE	DESCRIPTION
G	Green
R	Red

IV. CAP TYPE (TOP)

CODE	DESCRIPTION
F	Flush
E	Extended

See page 45 for Lamp Replacement Chart and page 46 for Lamp Technical Data.

V. CAP COLOR (TOP)

CODE	DESCRIPTION
G	Green
R	Red
K	Black‡
B	Blue‡
E	Grey‡
W	White‡
Y	Yellow‡

VI. LENS COLOR (MIDDLE)

CODE	DESCRIPTION
A	Amber
C	Clear

VII. LIGHT MODULE/VOLTAGE

CODE	DESCRIPTION	LIST
	FULL VOLTAGE	
FM12	12V AC/DC	$12.00
FM24	24V AC/DC	$12.00
FM120	120V AC/DC	$12.00
	MULTI-VOLTAGE, NON-RELAMPABLE	
MVD	20-277V AC or DC	$37.00

DISCOUNT SCHEDULE E

‡NOTE: Products marked with ‡ are not available for same-day shipping. Contact our Customer First Team for lead times and minimum order quantities.

VIII. LED LAMP COLOR

CODE	DESCRIPTION	LIST
	FOR FULL VOLTAGE MODULES	
LA	Amber	$14.00
LG	Green	$14.00
LR	Red	$14.00
LW	White	$14.00
	FOR MULTI-VOLTAGE MODULE	
LW	White	—
NL	**No Lamp**	– $ 1.80

IX. CONTACT BLOCK CONFIGURATION (LEFT SIDE) — OPERATED BY THE BOTTOM PUSH BUTTON

CODE	DESCRIPTION	LIST
(Blank)	Operator without Contact Blocks	—
10	1 Normally Open Contact Block	$ 8.10
01	1 Normally Closed Contact Block	$ 8.10
E	1 Early Make Contact Block	$ 8.10
D	1 Delayed Break Contact Block	$ 8.10
20	2 Normally Open Contact Blocks	$ 16.20
02	2 Normally Closed Contact Blocks	$ 16.20
11	1 Normally Open and 1 Normally Closed Contact Blocks	$ 16.20

X. CONTACT BLOCK CONFIGURATION (RIGHT SIDE) — OPERATED BY THE TOP PUSH BUTTON

(USE CHART IX FROM ABOVE)

Mix and Match Any Color and Momentary Illuminated Dual Push Button Caps and Lens

Flush/Flush Extended/Flush Flush/Extended

22mm IEC Momentary Illuminated Dual Push Buttons

Our 22mm IEC Momentary Illuminated Dual Push Buttons are designed to operate independently of each other. The Dual Push Button design gives you the flexibility to mount two push buttons and one indicating light into one 22.5mm hole, allowing you to perform multiple operations from one device. These push buttons are great for motor and pump applications. Contact blocks can be stacked up to 2 deep and 2 across for a total of 4 circuits per operator. All c3controls 22mm IEC operators are UL Listed and CE marked and are rated Type 4/4X as standard for watertight and corrosion resistance. In addition, operators are also listed for Type 1, 2, 3, 3R, 12, 13 and IP66 applications, and meet global standards requirements.

Product features include:

- Polyester construction for superior corrosion resistance, moisture rejection and electrical insulation.
- The Dual Push Button design incorporates all the features and advantages of the Series 22 IEC products.
- In addition to the two push buttons, an indicating light can be mounted between the two push buttons.
- Available state-of-the-art non-relampable multi-voltage light module with super-bright LED can be operated at any voltage from 20V to 277V AC or DC.
- Full voltage light modules use miniature bayonet base lamps to provide reliable lamp secureness.
- c3controls LED lamp design life is 100,000 hours – that's 11.4 years!
- Removable latching device allows for easy installation and wiring of contact blocks.
- A non-illuminated version is also available, see pages 8 & 9.
- Modular contact blocks use M3.5 plated captive steel terminal screws with self-lifting captive wire clamps that accommodate 0.5 ~ 4mm^2 (#22 ~ #12 AWG) wires (one or two wires per terminal) and have IP20 guarded terminals to prevent accidental contact with live parts.
- Operators conveniently mount in a round 22.5mm (7/8") hole that is directly interchangeable with competitors units and eliminates the labor required for notching.

UNIQUE PRODUCT FEATURES

Labor & Cost Savings

Combine the functionality of replacing up to three devices in one 22.5mm (7/8") hole—saving time, labor and space!

Environmentally Secure

The seal acts like a squeegee and forms a permanent watertight seal that meets Type 4/4X and IP66 without a rubber boot.

Wide Range of Operation

Full Voltage and Non-Relampable Multi-Voltage light units are available in a variety of voltages to meet your specific needs.

Some of Our Popular Configurations:

MOMENTARY ILLUMINATED DUAL PUSH BUTTONS

CONTACT SYMBOL	CONTACT BLOCK MOUNTING POSITION	COLOR		EXTENDED RED (BOTTOM) FLUSH GREEN (TOP)	LIST
		CAP	LENS		
1 NC & 1 NO	Left Right	Red/Green	Clear	W22IDPB-ERFG-C-FM120LG-01/10	$62.20
	Left Right	Red/Green	Clear	W22IDPB-ERFG-C-MVDLW-01/10	$73.20

IT'S EASY TO BUILD YOUR OWN PUSH BUTTON

Simply pick the code number from each of the sections below and combine them to build your part number.

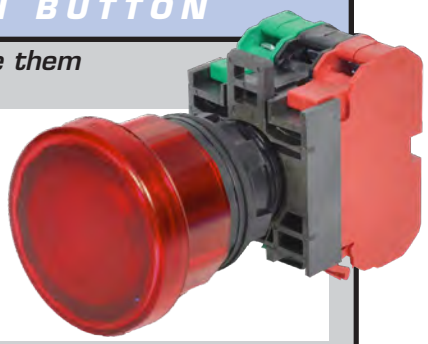

Maintained Push Buttons (Illuminated)
2 & 3-Position Push-Pull Release

W22IPP ____ – ____ ____ ____ – ____ ____ – ____ / ____

I II III IV V VI VII VIII IX

Example: To build one of our most popular Push Buttons, the part number would be **W22IPP + II + III + IV + V + VI + VII + VIII + IX** or **W22IPP2-MR-FM24LR-10/01**

I. OPERATOR TYPE

CODE	DESCRIPTION	LIST
W22IPP	Push-Pull Maintained	$22.00

II. OPERATOR FUNCTION

CODE	DESCRIPTION
2	2 Position
3A	3 Position Momentary Out, Maintained Center, Maintained In
3B	3 Position Momentary Out, Maintained Center, Momentary In

III. BEZEL TYPE

CODE	DESCRIPTION	LIST
(Blank)	Black Polyester (Type 4X)	—
A	Aluminum (Type 4)‡	$3.00

IV. LENS TYPE

CODE	DESCRIPTION	LIST
M	Mushroom	—
J	Jumbo Mushroom‡	$4.10

See page 45 for Lamp Replacement Chart and page 46 for Lamp Technical Data.

V. LENS COLOR

CODE	DESCRIPTION
A	Amber
G	Green
R	Red
B	Blue‡
C	Clear‡
W	White‡
Y	Yellow‡

VI. LIGHT MODULE/VOLTAGE

CODE	DESCRIPTION	LIST
	FULL VOLTAGE	
FM12	12V AC/DC	$12.00
FM24	24V AC/DC	$12.00
FM120	120V AC/DC	$12.00
	MULTI-VOLTAGE, NON-RELAMPABLE	
MVD	20-277V AC or DC	$37.00

VII. LED LAMP COLOR

CODE	DESCRIPTION	LIST
	FOR FULL VOLTAGE MODULES	
LA	Amber	$14.00
LG	Green	$14.00
LR	Red	$14.00
LW	White	$14.00
LB	Blue‡	$14.00
	FOR MULTI-VOLTAGE MODULE	
LW	White	—
NL	**No Lamp**	– $ 1.80

VIII. CONTACT BLOCK CONFIGURATION (LEFT SIDE)

CODE	DESCRIPTION	LIST
(Blank)	Operator without Contact Blocks	—
10	1 Normally Open Contact Block	$ 8.10
01	1 Normally Closed Contact Block	$ 8.10
E	1 Early Make Contact Block	$ 8.10
D	1 Delayed Break Contact Block	$ 8.10
20	2 Normally Open Contact Blocks	$ 16.20
02	2 Normally Closed Contact Blocks	$ 16.20
11	1 Normally Open and 1 Normally Closed Contact Blocks	$ 16.20

IX. CONTACT BLOCK CONFIGURATION (RIGHT SIDE)

(USE CHART VIII FROM ABOVE)

The Push-Pull Illuminated devices are available in three basic styles. The two position push-pull is maintained in both the push and pull positions. The primary application is "push" to "stop" and "pull" to "start". The three position has two options. One features the "out" position as momentary, the "center" as maintained, and the "in" position as maintained. The other version features the "center" as maintained while the "out" and "in" positions are momentary.

DISCOUNT SCHEDULE **E**

‡NOTE: Products marked with ‡ are not available for same-day shipping. Contact our Customer First Team for lead times and minimum order quantities.

O = OPEN X = CLOSED

MAINTAINED IN/MAINTAINED OUT

1 CIRCUIT (01)			2 CIRCUIT (10/01)			2 CIRCUIT (01/01)		
	OUT	IN		OUT	IN		OUT	IN
NC	X	O	NC	X	O	NC	X	O
			NO	O	X	NC	X	O

MOMENTARY OUT, MAINTAINED CENTER, MAINTAINED IN

	OUT	CENTER	IN
NC	X	O	O
DB	X	X	O
NO	O	O	X
EM	O	X	X

MOMENTARY OUT, MAINTAINED CENTER, MOMENTARY IN

	OUT	CENTER	IN
NC	X	O	O
DB	X	X	O
NO	O	O	X
EM	O	X	X

22mm IEC Maintained Illuminated Push Buttons

Our 22mm IEC Maintained Illuminated 2 & 3-Position Push Buttons feature contact blocks that are stackable up to 2 deep and 2 across for a total of 4 circuits per operator, depending on your light unit module. All c3controls 22mm IEC operators are UL Listed and CE marked and are rated Type 4/4X as standard for watertight and corrosion resistance. In addition, operators are also listed for Type 1, 2, 3, 3R, 12, 13 and IP66 applications, and meet global standards requirements.

Product features include:

- Available state-of-the-art non-relampable multi-voltage light modules with super-bright LEDs can be operated at any voltage from 20V to 277V AC or DC.
- Polyester construction for superior corrosion resistance, moisture rejection and electrical insulation.
- Wide variety of operator types and colors, and contact block configurations are available to meet your specific application needs.
- Full voltage light modules use miniature bayonet base lamps to provide reliable lamp secureness.
- c3controls LED lamp design life is 100,000 hours – that's 11.4 years!
- Removable latching device allows for easy installation and wiring.
- Compact size, only 45.6mm (1-57/64") deep from the front of the panel.
- Modular contact blocks use M3.5 plated captive steel terminal screws with self-lifting captive wire clamps that accommodate 0.5 ~4mm^2 (#22 ~ #12 AWG) wires (one or two wires per terminal) and have IP20 guarded terminals to prevent accidental contact with live parts.
- Operators conveniently mount in a round 22.5mm (7/8") hole that is directly interchangeable with competitors units and eliminates the labor required for notching.

UNIQUE PRODUCT FEATURES

We put the metal on the inside—where it counts!

- The solid brass detent mechanism is the best engineered, most reliable heavy-duty emergency stop button in the world. This rugged design ensures reliable operation in emergency applications, providing safe interruption of circuits, and much longer life when compared to any competitor's product.
- Rugged Lexan™ lenses provide better visibility and can resist high impact for reliable performance in most environments – even high ambient temperatures.
- Our 22mm IEC Illuminated Push Buttons can be utilized with our state-of-the-art super bright LED multi-voltage light modules.

Some of Our Popular Configurations:

2 & 3-POSITION PUSH-PULL MAINTAINED OPERATORS WITH POLYESTER CLAMP RING (TYPE 4X)

	MOMENTARY OUT, MAINTAINED CENTER, MAINTAINED IN		MOMENTARY OUT, MAINTAINED CENTER, MOMENTARY IN	
TYPE	CATALOG NUMBER	LIST	CATALOG NUMBER	LIST
Full Voltage	W22IPP3A-MR-FM120LR-10/01	$64.20	W22IPP3B-MR-FM120LR-10/01	$64.20
Multi-Voltage	W22IPP3A-MR-MVDLW-10/01	$75.20	W22IPP3B-MR-MVDLW-10/01	$75.20

Available Lens Colors for 2 & 3 Position Maintained Illuminated Push Buttons

Mushroom (40mm) — Jumbo Mushroom (60mm)

IT'S EASY TO BUILD YOUR OWN PUSH BUTTON

Simply pick the code number from each of the sections below and combine them to build your part number.

Maintained Emergency Stop Push Buttons (Illuminated) 2-Position Push-Twist Release

W22IPTR – ____ ____ R – ____ ____ – ____ / ____

I II III IV V VI VII VIII**

Example: To build one of our most popular Push Buttons, the part number would be **W22IPTR + II + III + R + V + VI + VII + VIII** or **W22IPTR-YMR-FM120LR-01/01**

*NOTE: Contact block configurations are based on circuit designation and light module unit.

I. OPERATOR TYPE

CODE	DESCRIPTION	LIST
W22IPTR	Illuminated Push-Twist Release	$ 47.00

II. HOUSING COLOR

CODE	DESCRIPTION	LIST
(Blank)	Black	—
Y	Yellow*	$3.00

*NOTE: A yellow housing with a red mushroom cap must be used to construct an EN418 Emergency Stop Push Button.

III. CAP TYPE

CODE	DESCRIPTION	LIST
M	Mushroom	—
J	Jumbo Mushroom‡	$4.10

IV. CAP/LENS COLOR

CODE	DESCRIPTION
R	Red

SEE PAGE 45 FOR LAMP REPLACEMENT CHART AND PAGE 46 FOR LAMP TECHNICAL DATA.

V. LIGHT MODULE/VOLTAGE

CODE	DESCRIPTION	LIST
	FULL VOLTAGE	
FM12	12V AC/DC	$ 12.00
FM24	24V AC/DC	$ 12.00
FM120	120V AC/DC	$ 12.00
	MULTI-VOLTAGE, NON-RELAMPABLE	
MVD	20-277V AC or DC	$ 37.00

VI. LED LAMP COLOR

CODE	DESCRIPTION	LIST
	FOR FULL VOLTAGE MODULES	
LR	Red	$ 14.00
LW	White	$ 14.00
	FOR MULTI-VOLTAGE MODULE	
LW	White	—
NL	**No Lamp**	– $ 1.80

DISCOUNT SCHEDULE **E**

VII. CONTACT BLOCK CONFIGURATION (LEFT SIDE)

CODE	DESCRIPTION	LIST
(Blank)	Operator without Contact Blocks	—
10	1 Normally Open Contact Block	$ 8.10
01	1 Normally Closed Contact Block	$ 8.10
E	1 Early Make Contact Block	$ 8.10
D	1 Delayed Break Contact Block	$ 8.10
20	2 Normally Open Contact Blocks	$ 16.20
02	2 Normally Closed Contact Blocks	$ 16.20
11	1 Normally Open and 1 Normally Closed Contact Blocks	$ 16.20

VIII. CONTACT BLOCK CONFIGURATION (RIGHT SIDE)

(USE CHART VII FROM ABOVE)

The linear push-off twist-to-release style operator requires a "twist" for the "out" or "on" position and a linear "push" for the "in" or "off" position. The twist mushroom cap is marked with arrows identifying the direction for the twist release.

‡NOTE: Products marked with ‡ are not available for same-day shipping. Contact our Customer First Team for lead times and minimum order quantities.

O = OPEN X = CLOSED

MAINTAINED IN/MAINTAINED OUT

1 CIRCUIT (01)			2 CIRCUIT (10/01)			2 CIRCUIT (01/01)		
	OUT	IN		OUT	IN		OUT	IN
NC	X	O	NC	X	O	NC	X	O
			NO	O	X	NC	X	O

SOME OF OUR POPULAR CONFIGURATIONS:

MAINTAINED EMERGENCY STOP PUSH BUTTON (ILLUMINATED) 2-POSITION PUSH-TWIST RELEASE

CONTACT SYMBOL	CONTACT BLOCK MOUNTING POSITION	COLOR		MUSHROOM CAP	LIST
		CAP	LENS		
1 DB & 1 NC	Left Right	Red	Red	W22IPTR-YMR-FM120LR-01/D	$ 92.20
1 NO & 1 NC	Left Right	Red	Red	W22IPTR-MR-MVDLW-01/D	$100.20

22mm IEC Maintained Illuminated Emergency Stop Push Buttons

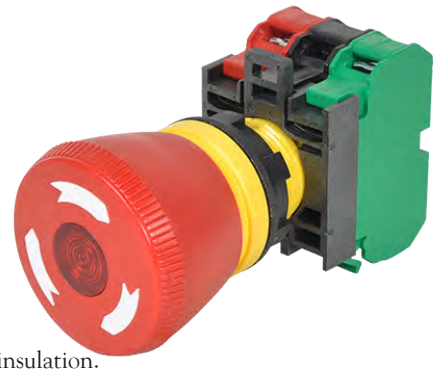

Our 22mm IEC Maintained Illuminated Push-Twist Release Push Buttons rugged design ensures reliable operation in emergency stop applications, providing safe interruption of circuits. The operators provide a trigger action function with direct drive contacts meeting global standards for emergency stop buttons. Contact blocks can be stacked up to 2 deep and 2 across for a total of 4 circuits per operator. All c3controls 22mm IEC operators are UL Listed and CE marked and are rated Type 4/4X as standard for watertight and corrosion resistance. In addition, operators are also listed for Type 1, 2, 3, 3R, 12, 13 and IP66 applications, and meet global standards requirements.

Product features include:

- Polyester construction for superior corrosion resistance, moisture rejection and electrical insulation.
- Meets global standards for Emergency Stop buttons.
- A non-Illuminated version is also available, see pages 14 & 15.
- Modular contact blocks use M3.5 plated captive steel terminal screws with self-lifting captive wire clamps that accommodate 0.5 ~ 4mm^2 (#22 ~ #12 AWG) wires (one or two wires per terminal) and have IP20 guarded terminals to prevent accidental contact with live parts.
- Operators conveniently mount in a round 22.5mm (7/8") hole that is directly interchangeable with competitors units and eliminates the labor required for notching.
- Available state-of-the-art non-relampable multi-voltage light module with super-bright LED can be operated at any voltage from 20V to 277V AC or DC.

UNIQUE PRODUCT FEATURES

Ergonomically Designed

Cone shaped head with knurls fit easily into your hand for a comfortable operation.

Ease of Visibility

Molded bold white arrows indicate the 45° twist-to-release operation for easy visibility over the life of the product.

EN418 Emergency Stop Operators

c3controls maintained illuminated push-twist-release operators were designed to meet EN418 Standards for "Safety of Machinery." Constructing an EN418 Emergency Stop Push Button from our standard operators is easy—simply select a red mushroom cap with a yellow housing.

- Ergonomically designed red mushroom cap (40mm (1-9/16")) with white arrows for quick identification and ease of control.
- Trigger Action Function—Operator requires dedicated push action to operate contacts, eliminating accidental operation and meeting global standards.
- Latching mechanism which is activated when the actuator of the device is depressed to a certain point and the contacts open.
- The anti-teasing function guarantees the contacts will remain open until a person manually intervenes and releases the actuator.
- The direct drive design mechanically links the mushroom cap operator and contacts to drive the electrical contacts open. The trigger action makes the Emergency Stop operator more than a push button.
- Red operator, yellow housing, and molded white directional arrows are all designed to meet global standards for Emergency Stop operators.
- Illuminated constructions available in full voltage and state-of-the-art non-relampable multi-voltage light module with super bright LED can be operated at any voltage from 20V to 277V AC or DC.

IT'S EASY TO BUILD YOUR OWN POTENTIOMETER

Simply pick the code number from each of the sections below and combine them to build your part number.

Potentiometer Operators

22POTO _____ – _____ – _____
I *II* *III* *IV*

Example: To build one of our most popular Potentiometer Operators, the part number would be 22POTO + II + III + IV or 22POTO5K-TBW

I. OPERATOR TYPE

CODE	DESCRIPTION	LIST
22POTO	Potentiometer	$58.00

II. RESISTANCE

CODE	DESCRIPTION	LIST
(Blank)	Operator only	—
1K	1k Potentiometer	$22.00
2.5K	2.5k Potentiometer	$22.00
5K	5k Potentiometer	$22.00
10K	10k Potentiometer	$22.00

Special order values available — consult factory (not available for guaranteed same day shipping).

III. CLAMP RING

CODE	DESCRIPTION	LIST
(Blank)	Polyester (Type 4X)	—
PM	Aluminum (Type 4)‡	$4.30

IV. TERMINAL BLOCK

CODE	DESCRIPTION	LIST
(Blank)	Operator only	—
TBW	Terminal Block installed and wired*	$16.00

NOTE: Available for 1K, 2.5K, 5K and 10K potentiometers.

Terminal block kit may be ordered separately (part number TBK, List $9.60) or installed and wired at the factory to the potentiometer operator.

DISCOUNT SCHEDULE **E**

SEE PAGE 53 FOR WIRING DIAGRAM.

‡NOTE: Products marked with ‡ are not available for same-day shipping. Contact our Customer First Team for lead times and minimum order quantities.

22mm IEC Potentiometers

Our single-turn Potentiometer Operators utilize standard 2 watt potentiometers with 6.4mm (1/4") bushing and 22.5mm (7/8") long slotted shafts. A 5/64" allen wrench is required for installation. All c3controls 22mm operators are UL Listed and are rated Type 4/4X as standard for watertight and corrosion resistance. In addition, operators are also listed for Type 1, 2, 3, 3R, 12 and 13, and meet global standards requirements.

Product features include:

- Polyester construction for superior corrosion resistance, moisture rejection and electrical insulation.
- Three point terminal block and hardware.
- Single-turn standard 2 watt potentiometer.
- All frictional parts are molded with an internal self-lubricant to provide outstanding wear without troublesome greases used by others that attracts dust and other particles in the area.
- Our revolutionary U-Cup seal is infused with a Teflon coating to eliminate cracking when exposed to harsh conditions such as heat, dryness and sunlight.
- #6 terminal screws with self-lifting captive wire clamps accommodate 0.5 ~ 4mm^2 (#22 ~ two #12 AWG) wires per terminal.
- Operators conveniently mount in a round 22.5mm (7/8") hole that is directly interchangeable with competitors units.

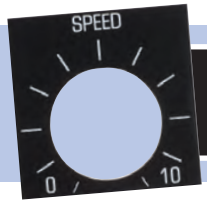

LEGEND PLATES FOR POTENTIOMETER OPERATORS *are available for same day shipping. See pages 41-43 for complete selection.*

IT'S EASY TO BUILD YOUR OWN PUSH BUTTON

Simply pick the code number from each of the sections below and combine them to build your part number.

Momentary Reset Push Buttons (Non-Illuminated)

W22RPB – ____ ____ ____ ____ – **PK**
I *II* *III* *IV* *V* *VI*

Example: To build one of our most popular Push Buttons, the part number would be **W22RPB + II + III + IV + V + PK** or **W22RPB-FB18-PK**

I. OPERATOR TYPE

CODE	DESCRIPTION	LIST
W22RPB	Reset Push Button	$10.00

II. BEZEL TYPE

CODE	DESCRIPTION	LIST
(Blank)	Black Polyester (Type 4X)	—
M	Chrome Plated (Type 4X)	$3.00
A	Aluminum (Type 4)‡	$3.00

III. CAP TYPE

CODE	DESCRIPTION
F	Flush
E	Extended‡

IV. CAP COLOR

CODE	DESCRIPTION
K	Black
B	Blue
R	Red
W	White‡

V. CAP MARKING

CODE	DESCRIPTION	LIST
(Blank)	No Marking	—
18	RESET	$ 3.00
102	R	$ 3.00

VI. ROD TYPE

CODE	DESCRIPTION	LIST
PK	178mm (7") Plastic Rod	$ 4.40

DISCOUNT SCHEDULE **E**

‡NOTE: Products marked with ‡ are not available for same-day shipping. Contact our Customer First Team for lead times and minimum order quantities.

UNIQUE PRODUCT FEATURES

- Designed to actuate the reset function of a Series 320 Overload Relay from outside of the enclosure.
- For use in an enclosure up to 254mm (10") deep when used with our Series 320 Overload Relays, providing superior performance in high shock and vibration applications. Refer to Section 6 Page 6 for our complete selection of Bimetallic Overload Relays.
- The rod can be easily cut to the desired length for use in a wide range of enclosure depths.
- Heavy-duty polyester construction for superior corrosion resistance and moisture rejection.
- Flush and extended cap types in a wide variety of colors are available for configuring products for any application.
- Operators conveniently mount in a round 22.5mm (7/8") hole that is directly interchangeable with competitors units and eliminates the labor required for notching.
- UL Listed, CE Marked and Rated Type 4/4X as standard for watertight and corrosion resistance. In addition, operators are also listed for Type 1, 2, 3, 3R, 12, 13 and IP66 applications, and meet global standards requirements.

Some of Our Popular Configurations:

MOMENTARY NON-ILLUMINATED RESET PUSH BUTTONS

CATALOG NUMBER	CAP TYPE	CAP COLOR	CAP MARKING	LIST
W22RPB-FK102-PK	Flush	Black	R	$17.40
W22RPB-FB18-PK	Flush	Blue	RESET	$17.40

Mix and Match Any Bezel, Color and Momentary Non-Illuminated Reset Push Button Cap

Polyester (Type 4X)

Chrome (Type 4X)

Aluminum (Type 4)

IT'S EASY TO BUILD YOUR OWN PILOT LIGHT

Simply pick the code number from each of the sections below and combine them to build your part number.

Unibody Pilot Lights (Relampable)

W22U – _____ _____ – _____ _____
I II III IV V

Example: To build one of our most popular Pilot Lights, the part number would be **W22U + II + III + IV** or **W22U-120LR-WLR**

I. OPERATOR TYPE

CODE	DESCRIPTION	LIST
W22U	Unibody Light Unit	$14.00

II. VOLTAGE

CODE	DESCRIPTION
	FULL VOLTAGE (50/60 HZ)
12	12V AC/DC
24	24V AC/DC
120	120V AC/DC

c3controls LED lamp design life is 100,000 hours – that's 11.4 years!

III. LAMP TYPE/COLOR

CODE	DESCRIPTION	LIST
	LED	
LA	Amber	$14.00
LB	Blue	$14.00
LG	Green	$14.00
LR	Red	$14.00
LW	White	$14.00
	INCANDESCENT	
I	Clear‡	—
NL	**No Lamp**	– $ 1.80

SEE PAGE 45 FOR LAMP REPLACEMENT CHART AND PAGE 46 FOR LAMP TECHNICAL DATA.

IV. LENS TYPE

CODE	DESCRIPTION	LIST
WL	Extended	$ 4.80
WNL	Flush	$ 4.80

V. LENS COLOR

CODE	DESCRIPTION
A	Amber
B	Blue
C	Clear
G	Green
R	Red
W	White‡
Y	Yellow‡

DISCOUNT SCHEDULE **E**

‡NOTE: The 12V unibody pilot light with an Incandescent lamp is not available for same-day shipping.
Contact our Customer First Team for lead times and minimum order quantities.

22mm IEC Unibody Relampable Pilot Lights

Our 22mm IEC Unibody Pilot Lights were designed with simplicity in function to save you valuable time and money. This full voltage light unit is available in 12, 24 and 120 volts using either Incandescent or our LED lamps with leakage protection. We offer five different lens color options to add to your flexibility. All c3controls 22mm IEC operators are UL Listed and CE marked and are rated Type 4/4X as standard for watertight and corrosion resistance. In addition, operators are also listed for Type 1, 2, 3, 3R, 12, 13 and IP66 applications, and meet global standards requirements.

Product features include:

- Vibration resistant compact design.
- Our seal is infused with a coating to eliminate cracking when exposed to harsh conditions such as heat, dryness and sunlight. This seal also acts as a light reflector because it is white which increases light output and improves visibility from all angles.
- Our rugged Lexan™ lenses provide better visibility and can resist high impact for reliable performance in most environments, even in high ambient temperatures.
- Wiring is made easy by utilizing rear access captive mounting screws with side wire entry.
- Polyester construction for superior corrosion resistance, moisture rejection and electrical insulation.
- Operators conveniently mount in a round 22.5mm (7/8") hole that is directly interchangeable with competitors units and eliminates the labor required for notching.

Some of Our Popular Configurations:

UNIBODY PILOT LIGHTS

CATALOG NUMBER	DESCRIPTION	LIST
W22U-120LA-WLA	120V Full Voltage Light w/Amber LED & Lens	$32.80
W22U-120LG-WLG	120V Full Voltage Light w/Green LED & Lens	$32.80
W22U-120LR-WLR	120V Full Voltage Light w/Red LED & Lens	$32.80
W22U-120I-WLR	120V Full Voltage Light w/Incan. Lamp & Red Lens	$18.80

Available Lens Colors for Unibody Pilot Lights

IT'S EASY TO BUILD YOUR OWN PILOT LIGHT

Simply pick the code number from each of the sections below and combine them to build your part number.

Unibody Pilot Lights (Non-Relampable)

W22UNR – _____ _____ – _____ _____

I *II* *III* *IV* *V*

Example: To build one of our most popular pilot lights, the part number would be W22UNR + II + III + IV + V or W22UNR-120LR-WNLR

I. OPERATOR TYPE

CODE	DESCRIPTION	LIST
W22UNR	Unibody Light Unit, Non-Relampable	$15.00

II. VOLTAGE

CODE	DESCRIPTION
	FULL VOLTAGE
12	12V AC/DC
24	24V AC/DC
120	110 – 130V AC/DC
240	220 – 240V AC‡

III. LED COLOR

CODE	DESCRIPTION
LA	Amber
LB	Blue
LG	Green
LR	Red
LW	White

c3controls integral LED lamps last 100,000 hours — ***that's 11.4 years!***

DISCOUNT SCHEDULE **E**

IV. LENS TYPE

CODE	DESCRIPTION
WL	Extended
WNL	Flush

V. LENS COLOR

CODE	DESCRIPTION
A	Amber
B	Blue
C	Clear
G	Green
R	Red
Y	Yellow‡

SEE PAGE 46 FOR LAMP TECHNICAL DATA.

‡NOTE: Products marked with ‡ are not available for same-day shipping. Contact our Customer First Team for lead times and minimum order quantities.

22mm IEC Unibody Non-Relampable Pilot Lights

Our 22mm IEC Non-Relampable Unibody Pilot Lights were designed with simplicity in function to save you valuable time and money. This full voltage light features integral LED lamps that provide great light output and leakage protection. Available in a variety of full voltage options and six lens color options. Wiring is made easy by utilizing rear access captive mounting screws with side wire entry. All c3controls 22mm IEC operators are UL Listed and CE marked and are rated Type 4/4X as standard for watertight and corrosion resistance. In addition, operators are also listed for Type 1, 2, 3, 3R, 12, 13, IP66 and IP67 applications, and meet global standards requirements.

Product features include:

- Wider range of operation; from 12V to 240V.
- Shortest depth behind the panel 22mm IEC unibody pilot light by over 6mm (1/4") to allow mounting in shallow enclosures.
- High-tech integral LED lamps offer the latest and most current technology providing leakage protection, great light output and increased visibility from side views—and lasts up to 100,000 hours!
- Vibration resistant compact, low power consumption energy saving design.
- AC and DC devices are bi-polar design, functionality is independent of which lead is connected to each terminal.
- Rugged Lexan™ lenses provide better visibility and can resist high impact for reliable performance in most environments—even in high ambient temperatures.
- IP20 guarded terminals prevent accidental contact with live parts.
- Polyester construction for superior corrosion resistance, moisture rejection and electrical insulation.
- Terminal screws with self-lifting captive wire clamps accommodate 0.5 ~ 4mm^2 (#22 ~ two #12 AWG) wires per terminal.
- Operators conveniently mount in a round 22.5mm (7/8") hole that is directly interchangeable with competitors units and eliminates the labor required for notching.

Some of Our Popular Configurations:

UNIBODY PILOT LIGHTS, NON-RELAMPABLE

CATALOG NUMBER	DESCRIPTION	LIST
W22UNR-24LR-WNLR	Unibody Non-Relampable LED Pilot Light, 24V AC/DC, Red LED, Red Lens	$15.00
W22UNR-24LG-WNLG	Unibody Non-Relampable LED Pilot Light, 24V AC/DC, Green LED, Green Lens	$15.00
W22UNR-120LR-WNLR	Unibody Non-Relampable LED Pilot Light, 120V AC/DC, Red LED, Red Lens	$15.00
W22UNR-120LG-WNLG	Unibody Non-Relampable LED Pilot Light, 120V AC/DC, Green LED, Green Lens	$15.00
W22UNR-120LA-WNLA	Unibody Non-Relampable LED Pilot Light, 120V AC/DC, Amber LED, Amber Lens	$15.00

Available Lens Colors for Non-Relampable Unibody Pilot Lights

Flush — Extended

IT'S EASY TO BUILD YOUR OWN LIGHT MODULE

Simply pick the code number from each of the sections below and combine them to build your part number.

20-277V AC/DC Multi-Voltage Light Module (Non-Relampable)

W22 MVD LW
/ // ///

Example: To build one of our most popular Pilot Lights, the part number would be W22MVDLW

I. OPERATOR TYPE

CODE	DESCRIPTION
W22	Light Accessory Module

II. LIGHT MODULE/VOLTAGE

CODE	DESCRIPTION	LIST
MVD	Multi-Voltage 20-277V AC/DC	$37.00

III. LED LAMP COLOR

CODE	DESCRIPTION
LW	White

c3controls LED lamps last 100,000 hours — *that's 11.4 years!*

SEE PAGE 46 FOR LAMP TECHNICAL DATA.

DISCOUNT SCHEDULE **E**

c3 Exclusive!

UNIQUE PRODUCT FEATURES

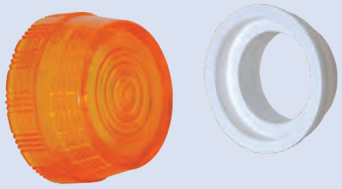

Enhanced visibility achieved in combination with the Lexan™ lens and seal available on all c3controls illuminated pilot devices.

ELIMINATE THE HEADACHE OF MATCHING SPECIFIC LAMPS WITH SPECIFIC LIGHT UNITS!

Our state-of-the-art Non-Relampable Multi-Voltage Light Modules come with our super-bright white LEDs and can be operated from 20V to 277V AC or DC without losing light intensity – making them easily interchangeable between your applications and saving you inventory costs.

The compact design saves you valuable space in your control panel—delivering the shortest depth light modules engineered in the USA.

- Low power consumption energy saving design.
- Multi-voltage module can be used with modular pilot lights, illuminated push buttons, push-to-test lights, and illuminated selector switches.
- Bi-polar design, functionality is independent of which lead is connected to each terminal.
- When used with our illuminated pilot devices, our rugged Lexan™ lenses provide better visibility and can resist high impact for reliable performance in most environments, even high ambient temperatures.
- When used with our illuminated pilot devices, our seal is infused with a coating to eliminate cracking when exposed to harsh conditions such as heat, dryness and sunlight. This seal also acts as a light reflector because it is white which increases light output and improves visibility from all angles.
- Heavy-duty polyester construction for excellent durability, superior corrosion resistance, moisture rejection, and electrical insulation.
- Captive IP20 guarded terminals to prevent accidental contact with live parts.

IT'S EASY TO BUILD YOUR OWN PILOT LIGHT

Simply pick the code number from each of the sections below and combine them to build your part number.

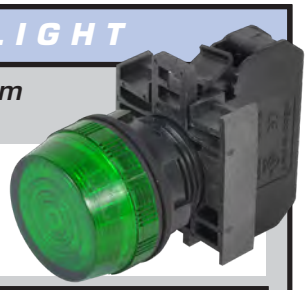

Modular Pilot Lights

W22PL – ____ ____ – ____ ____
I *II* *III* *IV* *V*

Example: To build one of our most popular Pilot Lights, the part number would be **W22PL + II + III + IV + V** or **W22PL-FM120LR-WLR**

I. OPERATOR TYPE

CODE	DESCRIPTION	LIST
W22PL	Pilot Light	$12.00

II. LIGHT MODULE/VOLTAGE

CODE	DESCRIPTION	LIST
	FULL VOLTAGE	
FM12	12V AC/DC	$12.00
FM24	24V AC/DC	$12.00
FM120	120V AC/DC	$12.00
	MULTI-VOLTAGE, NON-RELAMPABLE	
MVD	20-277V AC or DC	$37.00
	RESISTOR	
RM120	120V AC/DC‡	$15.00

III. LED LAMP COLOR

CODE	DESCRIPTION	LIST
	FOR FULL VOLTAGE & RESISTOR MODULES	
LA	Amber	$14.00
LB	Blue	$14.00
LG	Green	$14.00
LR	Red	$14.00
LW	White	$14.00
	FOR MULTI-VOLTAGE MODULE	
LW	White	—
NL	**No Lamp**	– $ 1.80

IV. LENS TYPE

CODE	DESCRIPTION	LIST
WL	Extended	$ 4.80
WNL	Flush	$ 4.80

V. LENS COLOR

CODE	DESCRIPTION
A	Amber
B	Blue
C	Clear
G	Green
R	Red
Y	Yellow‡

See page 45 for Lamp Replacement Chart and page 46 for Lamp Technical Data.

DISCOUNT SCHEDULE **E**

‡NOTE: Products marked with ‡ are not available for same-day shipping. Contact our Customer First Team for lead times and minimum order quantities.

IT'S EASY TO BUILD YOUR OWN PILOT LIGHT

Simply pick the code number from each of the sections below and combine them to build your part number.

Push-To-Test Pilot Lights

W22PTT – ____ ____ – ____ ____ ____
I *II* *III* *IV* *V* *VI*

Example: To build one of our most popular Pilot Lights, the part number would be **W22PTT + II + III + IV + V + VI** or **W22PTT-FM120LG-FG**

I. OPERATOR TYPE

CODE	DESCRIPTION	LIST
W22PTT	Push-To-Test	$33.00

II. LIGHT MODULE/VOLTAGE

(USE CHART II FROM ABOVE)

Push-To-Test Pilot Lights combine an illuminated push button with normally open and normally closed contact blocks factory wired for three-point wiring in standard push-to-test circuits.

See page 45 for Lamp Replacement Chart and page 46 for Lamp Technical Data.

III. LAMP TYPE/COLOR

(USE CHART III FROM ABOVE)

IV. BEZEL TYPE

CODE	DESCRIPTION	LIST
(Blank)	Black Polyester (Type 4X)	—
M	Chrome Plated (Type 4X)	$ 3.00
A	Aluminum (Type 4)‡	$ 3.00

V. LENS TYPE

CODE	DESCRIPTION
F	Flush
E	Extended

VI. LENS COLOR

CODE	DESCRIPTION	LIST
A	Amber	$ 4.80
B	Blue	$ 4.80
C	Clear	$ 4.80
G	Green	$ 4.80
R	Red	$ 4.80
W	White	$ 4.80
Y	Yellow‡	$ 4.80

DISCOUNT SCHEDULE **E**

‡NOTE: Products marked with ‡ are not available for same-day shipping. Contact our Customer First Team for lead times and minimum order quantities.

22mm IEC Modular & Push-To-Test Pilot Lights

Our 22mm IEC Modular and Push-To-Test Pilot Lights are designed to offer flexibility by offering light units in Multi-Voltage and Full Voltage packages, all available in a wide range of voltages. The modules meet IP20 standards for finger-safe terminations. Wiring is made easy by utilizing self-lifting captive terminal screws that accommodate 0.5 ~ 4mm2(#22 ~ #12 AWG) wires (one or two wires per terminal). All c3controls 22mm IEC operators are UL Listed and CE marked and are rated Type 4/4X as standard for watertight and corrosion resistance. In addition, operators are also listed for Type 1, 2, 3, 3R, 12, 13 and IP66 applications, and meet global standards requirements.

Product features include:

- Polyester construction for superior corrosion resistance, moisture rejection and electrical insulation.
- Operators conveniently mount in a round 22.5mm (7/8") hole that is directly interchangeable with competitors units and eliminates the labor required for notching.
- Full voltage light modules use miniature bayonet base lamps to provide reliable lamp secureness.
- c3controls LED lamp design life is 100,000 hours – that's 11.4 years!

UNIQUE PRODUCT FEATURES

- Compact, thin design is also vibration resistant.
- Multi-Voltage and Full Voltage light units available in a wide range of voltages.
- Heavy duty polyester construction for excellent durability and corrosion resistance.
- Our seal is infused with a coating to eliminate cracking when exposed to harsh conditions such as heat, dryness and sunlight. This seal also acts as a light reflector because it is white which increases light output and improves visibility from all angles.
- Our rugged Lexan™ lenses provide better visibility and can resist high impact for reliable performance in most environments, even in high ambient temperatures.
- State-of-the-art non-relampable multi-voltage light modules with super-bright LEDs can be operated at any voltage from 20V to 277V AC or DC.

Some of Our Popular Configurations:

MODULAR PILOT LIGHTS

CATALOG NUMBER	DESCRIPTION	LIST
W22PL-FM120LA-WLA	120V Full Voltage w/Amber LED & Lens	$42.80
W22PL-FM120LR-WLR	120V Full Voltage w/Red LED & Lens	$42.80
W22PL-MVDLW-WLR	Multi-Voltage w/White LED & Red Lens	$53.80

PUSH-TO-TEST PILOT LIGHTS

CATALOG NUMBER	DESCRIPTION	LIST
W22PTT-FM120LA-EA	Full Voltage 120V w/Amber LED and Amber Extended Lens	$63.80
W22PTT-FM120LG-FG	Full Voltage 120V w/Green LED and Green Flush Lens	$63.80
W22PTT-FM120LR-ER	Full Voltage 120V w/Red LED and Red Extended Lens	$63.80
W22PTT-MVDLW-ER	Multi-Voltage w/White LED and Red Extended Lens	$74.80

PTT WIRING DIAGRAM

Customer connections of line and test power supplies. Light unit is powered by the line circuit. Depressing the lens cap will disconnect the line and connect the test supply, confirming bulb status.

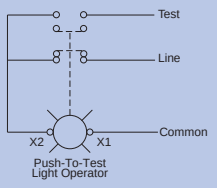

Available Lens Colors for Modular & Push-To-Test Pilot Lights

Polyester (Type 4X) | Chrome (Type 4X) | Aluminum (Type 4)

IT'S EASY TO BUILD YOUR OWN SELECTOR SWITCH

Simply pick the code number from each of the sections below and combine them to build your part number.

Selector Switches (Illuminated)

W22I ____ – ____ ____ ____ – ____ ____ – ____ / ____

I II III IV V VI VII VIII IX**

Example: To build one of our most popular Selector Switches, the part number would be **W22I + II + III + IV + V + VI + VII + VIII + IX** or **W22ISRC-IHG-FM24LG-10**

*NOTE: Contact block configurations are based on circuit designations (see page 32 for circuit designation charts).

I. OPERATOR TYPE

CODE	DESCRIPTION	LIST
W22I	Illuminated Selector Switch	$14.00

II. OPERATOR FUNCTION

CODE	POSITION/FUNCTION	LIST
S2	2/Maintained	—
SRL	2/Spring Return, R to L	$ 2.90
S3	3/Maintained	—
SLC	3/Spring Return, L to C	$ 2.90
SRC	3/Spring Return, R to C	$ 2.90
SAC	3/Spring Return, L & R to C	$ 2.90

III. BEZEL TYPE

CODE	DESCRIPTION	LIST
(Blank)	Black Polyester (Type 4X)	—
M	Chrome Plated (Type 4X)	$ 3.00
A	Aluminum (Type 4)‡	$ 3.00

HANDLE POSITIONS

2-POSITION

3-POSITION

IV. HANDLE TYPE

CODE	DESCRIPTION	LIST
IH	Illuminated Standard	$ 7.00
IL	Illuminated Lever	$ 7.00

V. HANDLE/INSERT COLOR

CODE	HANDLE COLOR	INSERT COLOR
A	Amber	White
B	Blue	White
G	Green	White
R	Red	White
W	White	Black
C	Clear‡	Black
Y	Yellow‡	Black

VI. VOLTAGE

CODE	DESCRIPTION	LIST
	FULL VOLTAGE	
FM12	12V AC/DC	$12.00
FM24	24V AC/DC	$12.00
FM120	120V AC/DC	$12.00
	MULTI-VOLTAGE, NON-RELAMPABLE	
MVD	20-277V AC or DC	$37.00

See page 45 for Lamp Replacement Chart and page 46 for Lamp Technical Data.

VII. LED LAMP COLOR

CODE	DESCRIPTION	LIST
	FOR FULL VOLTAGE MODULES	
LA	Amber	$14.00
LB	Blue	$14.00
LG	Green	$14.00
LR	Red	$14.00
LW	White	$14.00
	FOR MULTI-VOLTAGE MODULE	
LW	White	—
NL	**No Lamp**	– $ 1.80

VIII. CONTACT BLOCK CONFIGURATION (LEFT SIDE)

CODE	DESCRIPTION	LIST
(Blank)	Operator without Contact Blocks	—
10	1 Normally Open Contact Block	$ 8.10
01	1 Normally Closed Contact Block	$ 8.10
E	1 Early Make Contact Block	$ 8.10
D	1 Delayed Break Contact Block	$ 8.10
20	2 Normally Open Contact Blocks	$ 16.20
02	2 Normally Closed Contact Blocks	$ 16.20
11	1 Normally Open and 1 Normally Closed Contact Blocks	$ 16.20

IX. CONTACT BLOCK CONFIGURATION (RIGHT SIDE)

(USE CHART VIII FROM ABOVE)

‡NOTE: Products marked with ‡ are not available for same-day shipping. Contact our Customer First Team for lead times and minimum order quantities.

DISCOUNT SCHEDULE E

Some of Our Popular Configurations:

2-POSITION ILLUMINATED SELECTOR SWITCH OPERATORS

CONTACT SYMBOL	CONTACT BLOCK MOUNTING POS. Viewed from front of operator	HANDLE POSITION 0=OPEN X=CLOSED			TYPE OF OPERATOR	MAINTAINED POSITION		SPRING RETURN FROM RIGHT TO LEFT		SPRING RETURN FROM RIGHT TO CENTER	
		LEFT	CENTER	RIGHT		CATALOG #	LIST	CATALOG #	LIST	CATALOG #	LIST
	Either	0	N/A	X	IH	W22IS2-IHG-FM120LG-10	$55.10	W22ISRL-IHG-FM120LG-10	$58.00	W22ISRC-IHG-FM120LG-10	$58.00

22mm IEC Illuminated Selector Switches

c3controls Illuminated Selector Switches utilize multi-voltage and full voltage light units that come standard in a wide range of voltages. Our LED lamps offer long life, outstanding light output, and leakage protection. Using an illuminated selector switch can free up valuable space on a control panel by eliminating the need for an additional pilot light. Additionally, our illuminated handles are available in two styles and four different colors.

Our one cam and proper contact block sequence can perform the same functions as it takes for up to seven cams from our competitors units. Add our snap-on contact blocks and you can control up to four different circuits with just one selector switch. All c3controls 22mm IEC operators are UL Listed and CE marked and are rated Type 4/4X as standard for watertight and corrosion resistance. In addition, operators are also listed for Type 1, 2, 3, 3R, 12, 13 and IP66 applications, and meet global standards requirements.

Product features include:

- Polyester construction for superior corrosion resistance, moisture rejection and electrical insulation.
- Compact size, only 45.6mm (1-51/64") deep from the front of the panel.
- Our rugged Lexan™ lenses provide better visibility and can resist high impact for reliable performance in most environments, even in high ambient temperatures.
- c3controls LED lamp design life is 100,000 hours—that's 11.4 years!
- Removable latching device allows for easy installation and wiring.
- Modular contact blocks use M3.5 plated captive steel terminal screws with self-lifting captive wire clamps that accommodate 0.5 ~ 4mm2 (#22 ~ #12 AWG) wires (one or two wires per terminal) and have IP20 guarded terminals to prevent accidental contact with live parts.
- Operators conveniently mount in a round 22.5mm (7/8") hole that is directly interchangeable with competitors units and eliminates the labor required for notching.

UNIQUE PRODUCT FEATURES

Save time & money - with c3controls, one cam does it all!

- One-Cam does it all vs. our competitors who need up to seven cams to perform the same function. This One-Cam design eliminates the need for multiple cam configurations and selector switch configuration nightmares, saving time, inventory, money, and ensuring 100% cam selection configuration accuracy.
- Multi-Voltage and Full Voltage light units available in a wide range of voltages.
- Compact, thin design for fitting into tight spaces.

O = OPEN X = CLOSED

CONTACT BLOCK SELECTION FOR 2-POSITION SELECTOR SWITCHES

CIRCUIT DESIG.	HANDLE POSITION LEFT	HANDLE POSITION RIGHT	BLOCK CATALOG NUMBER	MOUNTING POSITION
H	O	X	WNO	EITHER
G	X	O	WNC	EITHER

CONTACT BLOCK SELECTION FOR 3-POSITION SELECTOR SWITCHES

CIRCUIT DESIG.	HANDLE POSITION LEFT	HANDLE POSITION CENTER	HANDLE POSITION RIGHT	BLOCK CATALOG NUMBER	MOUNTING POSITION
A	X	O	O	WNO	LEFT
B	O	X	O	WNC	EITHER
C	O	O	X	WNO	RIGHT
D	O	X	X	WDB	LEFT
E	X	O	X	WEM	EITHER
F	X	X	O	WDB	RIGHT

Mix and Match Any Bezel, Insert Color and Illuminated Selector Switch Handle

Standard Lever

Polyester (Type 4X)

Chrome (Type 4X)

Aluminum (Type 4)

IT'S EASY TO BUILD YOUR OWN SELECTOR SWITCH

Simply pick the code number from each of the sections below and combine them to build your part number.

Selector Switches (Non-Illuminated)

W22 ____ – ____ ____ ____ – ____ / ____

I II III IV V VI VII**

Example: To build one of our most popular Selector Switches, the part number would be **W22 + II + III + IV + V + VI + VII** or **W22S3-HW-10/10**

*NOTE: Contact block configurations are based on circuit designations (see below for circuit designation charts).

I. OPERATOR TYPE

CODE	DESCRIPTION	LIST
W22	Selector Switch	$ 10.00

II. OPERATOR FUNCTION

CODE	POSITION/FUNCTION	LIST
S2	2/Maintained	—
SRL	2/Spring Return, R to L	$ 2.90
S3	3/Maintained	—
SLC	3/Spring Return, L to C	$ 2.90
SRC	3/Spring Return, R to C	$ 2.90
SAC	3/Spring Return, L & R to C	$ 2.90

DISCOUNT SCHEDULE **E**

‡NOTE: Products marked with ‡ are not available for same-day shipping. Contact our Customer First Team for lead times and minimum order quantities.

III. BEZEL TYPE

CODE	DESCRIPTION	LIST
(Blank)	Black Polyester (Type 4X)	—
M	Chrome Plated (Type 4X)	$ 3.00
A	Aluminum (Type 4)‡	$ 3.00

IV. HANDLE TYPE

CODE	DESCRIPTION	LIST
H	Standard	$ 5.10
L	Lever	$ 5.10

V. HANDLE INSERT COLOR

CODE	DESCRIPTION
B	Blue
E	Grey
R	Red
W	White
Y	Yellow‡

VI. CONTACT BLOCK CONFIGURATION (LEFT SIDE)

CODE	DESCRIPTION	LIST
(Blank)	Operator without Contact Blocks	—
10	1 Normally Open Contact Block	$ 8.10
01	1 Normally Closed Contact Block	$ 8.10
E	1 Early Make Contact Block	$ 8.10
D	1 Delayed Break Contact Block	$ 8.10
20	2 Normally Open Contact Blocks	$ 16.20
02	2 Normally Closed Contact Blocks	$ 16.20
11	1 Normally Open and 1 Normally Closed Contact Blocks	$ 16.20

VII. CONTACT BLOCK CONFIGURATION (RIGHT SIDE)

(USE CHART VI FROM ABOVE)

Each operating handle is black with a factory assembled color insert.

HANDLE POSITIONS

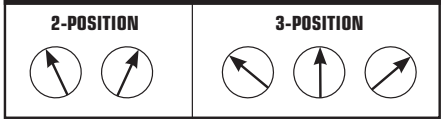

O = OPEN X = CLOSED

CONTACT BLOCK SELECTION FOR 2-POSITION SELECTOR SWITCHES

CIRCUIT DESIG.	HANDLE POSITION LEFT	HANDLE POSITION RIGHT	BLOCK CATALOG NUMBER	MOUNTING POSITION
H	O	X	WNO	EITHER
G	X	O	WNC	EITHER

CONTACT BLOCK SELECTION FOR 3-POSITION SELECTOR SWITCHES

CIRCUIT DESIG.	HANDLE POSITION LEFT	HANDLE POSITION CENTER	HANDLE POSITION RIGHT	BLOCK CATALOG NUMBER	MOUNTING POSITION
A	X	O	O	WNO	LEFT
B	O	X	O	WNC	EITHER
C	O	O	X	WNO	RIGHT
D	O	X	X	WDB	LEFT
E	X	O	X	WEM	EITHER
F	X	X	O	WDB	RIGHT

Mix and Match Any Bezel, Insert Color and Non-Illuminated Selector Switch Handle

Standard — Lever — Polyester (Type 4X) — Chrome (Type 4X) — Aluminum (Type 4)

22mm IEC Non-Illuminated Selector Switches

Our one cam and proper contact block sequence can perform the same functions as it takes for up to seven cams from our competitors units. Add our snap-on contact blocks and you can control up to four different circuits with just one selector switch. All c3controls 22mm IEC operators are UL Listed and CE marked and are rated Type 4/4X as standard for watertight and corrosion resistance. In addition, operators are also listed for Type 1, 2, 3, 3R, 12, 13 and IP66 applications, and meet global standards requirements.

Product features include:

- Polyester construction for superior corrosion resistance, moisture rejection and electrical insulation.
- Compact size, only 45.6mm (1-51/64") deep from the front of the panel.
- Removable latching device allows for easy installation and wiring.
- Modular contact blocks use M3.5 plated captive steel terminal screws with self-lifting captive wire clamps that accommodate 0.5 ~ 4mm2(#22 ~ #12 AWG) wires (one or two wires per terminal) and have IP20 guarded terminals to prevent accidental contact with live parts.
- Operators conveniently mount in a round 22.5mm (7/8") hole that is directly interchangeable with competitors units and eliminates the labor required for notching.

UNIQUE PRODUCT FEATURES

Save time & money - with c3controls, one cam does it all!

- One-Cam does it all vs. our competitors who need up to seven cams to perform the same function. This One-Cam design eliminates the need for multiple cam configurations and selector switch configuration nightmares, saving time, inventory, money, and ensuring 100% cam selection configuration accuracy.
- Compact, thin design for fitting into tight spaces.

Some of Our Popular Configurations:

2-POSITION NON-ILLUMINATED SELECTOR SWITCHES

CONTACT SYMBOL	CONTACT BLOCK MOUNTING POS. Viewed from front of operator	HANDLE POSITION 0=OPEN X=CLOSED		TYPE OF OPERATOR	MAINTAINED POSITION		SPRING RETURN- RIGHT TO LEFT	
		LEFT	RIGHT		CATALOG #	LIST	CATALOG #	LIST
1 NO	EITHER	0	X	Standard	W22S2-HW-10	$23.20	W22SRL-HW-10	$26.10
				Lever	W22S2-LW-10	$23.20	W22SRL-LW-10	$26.10
NC	EITHER	X	0	Standard	W22S2-HW-01	$23.20	W22SRL-HW-01	$26.10
				Lever	W22S2-LW-01	$23.20	W22SRL-LW-01	$26.10

3-POSITION NON-ILLUMINATED SELECTOR SWITCHES

CONTACT SYMBOL	CONTACT BLOCK MOUNTING POS. Viewed from front of operator	HANDLE POSITION 0=OPEN X=CLOSED			TYPE OF OPERATOR	MAINTAINED POSITION		SPRING RETURN- LEFT TO CENTER		SPRING RETURN- RIGHT TO CENTER		SPRING RETURN- ALL EITHER TO CENTER	
		LEFT	CENTER	RIGHT		CATALOG #	LIST	CATALOG #	LIST	CATALOG #	LIST	CATALOG #	LIST
NO/NO	LEFT	X	0	0	Standard	W22S3-HW-10/10	$31.30	W22SLC-HW-10/10	$34.20	W22SRC-HW-10/10	$34.20	W22SAC-HW-10/10	$34.20
	RIGHT	0	0	X									

IT'S EASY TO BUILD YOUR OWN SELECTOR SWITCH

Simply pick the code number from each of the sections below and combine them to build your part number.

Keyed Selector Switches

W22K _____ – **K** _____ – _____ / _____

I *II* *III* *IV* *V** *VI**

Example: To build one of our most popular Keyed Selector Switches, the part number would be W22K + II + K + IV + V + VI or W22KS3-KRA-10/10

*NOTE: Contact block configurations are based on circuit designations (see below for circuit designation charts).

I. OPERATOR TYPE

CODE	DESCRIPTION	LIST
W22K	Keyed Selector Switch	$22.00

II. OPERATOR FUNCTION

CODE	POS./FUNCTION	AVAIL. KEY REMOVAL POSITION(S)	LIST
S2	2/Maintained	RA,RR,RL	$16.00
SRL	2/Spring Return, R to L	RL	$18.00
S3	3/Maintained	RA,RL,RR,RC, RLC,RRC	$19.00
SLC	3/Spring Return, L to C	RC,RR,RRC	$22.00
SRC	3/Spring Return, R to C	RC,RL,RLC	$22.00
SAC	3/Spring Return, L & R to C	RC	$22.00

III. BEZEL/INDICATOR COLOR

CODE	DESCRIPTION
K	Black Bezel/White Indicator

IV. KEY REMOVAL POSITION

CODE	REMOVAL POSITION
RA	All
RL	Left Only
RR	Right Only
RC	Center Only
RLC	Left & Center Only
RRC	Right & Center Only

DISCOUNT SCHEDULE **E**

V. CONTACT BLOCK CONFIGURATION (LEFT SIDE)

CODE	DESCRIPTION	LIST
(Blank)	Operator without Contact Blocks	—
10	1 Normally Open Contact Block	$ 8.10
01	1 Normally Closed Contact Block	$ 8.10
E	1 Early Make Contact Block	$ 8.10
D	1 Delayed Break Contact Block	$ 8.10
20	2 Normally Open Contact Blocks	$ 16.20
02	2 Normally Closed Contact Blocks	$ 16.20
11	1 Normally Open and 1 Normally Closed Contact Blocks	$ 16.20

VI. CONTACT BLOCK CONFIGURATION (RIGHT SIDE)

(USE CHART V FROM ABOVE)

Keyed Switch Options

Alternate Key Combinations: Up to 9 different key combinations (CC series) are available. To order locks keyed differently, consult factory or specify on order and increase the List price $60.00 per operator.

Master Keys: A master key is available that works in all 9 CC series key combinations. To order, specify part number MS MK1250 ($43.00 per set of two master keys).

Extra or Replacement Keys: Available for standard keyed selector switches only. To order, specify part number ES201 ($8.60 per set of two keys). NOTE: Two keys come standard with each operator.

KEY POSITIONS

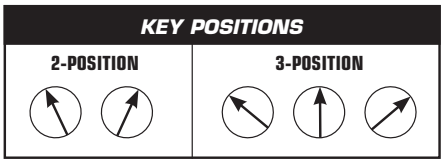

0 = OPEN X = CLOSED

CONTACT BLOCK SELECTION FOR 3-POSITION SELECTOR SWITCHES

CIRCUIT DESIG.	HANDLE POSITION LEFT	CENTER	RIGHT	BLOCK CATALOG NUMBER	MOUNTING POSITION
A	X	0	0	WNO	LEFT
B	0	X	0	WNC	EITHER
C	0	0	X	WNO	RIGHT
D	0	X	X	WDB	LEFT
E	X	0	X	WEM	EITHER
F	X	X	0	WDB	RIGHT

CONTACT BLOCK SELECTION FOR 2-POSITION SELECTOR SWITCHES

CIRCUIT DESIG.	HANDLE POSITION LEFT	RIGHT	BLOCK CATALOG NUMBER	MOUNTING POSITION
H	0	X	WNO	EITHER
G	X	0	WNC	EITHER

22mm IEC Keyed Selector Switches

Our one cam and proper contact block sequence can perform the same functions as it takes for up to seven cams from our competitors units. Add our snap-on contact blocks and you can control up to four different circuits with just one selector switch. All c3controls 22mm IEC operators are UL Listed and CE marked and are rated Type 4/4X as standard for watertight and corrosion resistance. In addition, operators are also listed for Type 1, 2, 3, 3R, 12, 13 and IP66 applications, and meet global standards requirements.

Product features include:

- Polyester construction for superior corrosion resistance, moisture rejection and electrical insulation.
- Compact size, only 45.6mm (1-51/64") deep from the front of the panel.
- Removable latching device allows for easy installation and wiring.
- Modular contact blocks use M3.5 plated captive steel terminal screws with self-lifting captive wire clamps that accommodate 0.5 ~ 4mm2 (#22 ~ #12 AWG) wires (one or two wires per terminal) and have IP20 guarded terminals to prevent accidental contact with live parts.
- Operators conveniently mount in a round 22.5mm (7/8") hole that is directly interchangeable with competitors units and eliminates the labor required for notching.

UNIQUE PRODUCT FEATURES

Save time & money - with c3controls, one cam does it all!

- One-Cam does it all vs. our competitors who need up to seven cams to perform the same function. This One-Cam design eliminates the need for multiple cam configurations and selector switch configuration nightmares, saving time, inventory, money, and ensuring 100% cam selection configuration accuracy.
- Compact, thin design for fitting into tight spaces.

Some of Our Popular Configurations:

2-POSITION KEYED SELECTOR SWITCH OPERATORS

CONTACT SYMBOL	CONTACT BLOCK MOUNTING POS. Viewed from front of operator	HANDLE POSITION 0=OPEN X=CLOSED LEFT	HANDLE POSITION 0=OPEN X=CLOSED RIGHT	TYPE OF OPERATOR	MAINTAINED POSITION CATALOG #	MAINTAINED POSITION LIST	SPRING RETURN-RIGHT TO LEFT CATALOG #	SPRING RETURN-RIGHT TO LEFT LIST
1 NO	EITHER	0	X	Key Removal Pos.				
				LEFT	W22KS2-KRL-10	$46.10	W22KSRL-KRL-10	$48.10
				RIGHT	W22KS2-KRR-10	$46.10	—	—
				ALL	W22KS2-KRA-10	$46.10	—	—
1 NC	EITHER	X	0	Key Removal Pos.				
				LEFT	W22KS2-KRL-01	$46.10	W22KSRL-KRL-01	$48.10
				RIGHT	W22KS2-KRR-01	$46.10	—	—
				ALL	W22KS2-KRA-01	$46.10	—	—

3-POSITION KEYED SELECTOR SWITCH OPERATORS

CONTACT SYMBOL	CONTACT BLOCK MOUNTING POS. Viewed from front of operator	HANDLE POSITION 0=OPEN X=CLOSED LEFT	HANDLE POSITION 0=OPEN X=CLOSED CENTER	HANDLE POSITION 0=OPEN X=CLOSED RIGHT	TYPE OF OPERATOR	MAINTAINED POSITION CATALOG #	MAINTAINED POSITION LIST	SPRING RETURN-LEFT TO CENTER CATALOG #	SPRING RETURN-LEFT TO CENTER LIST	SPRING RETURN-RIGHT TO CENTER CATALOG #	SPRING RETURN-RIGHT TO CENTER LIST	SPRING RETURN-ALL EITHER TO CENTER CATALOG #	SPRING RETURN-ALL EITHER TO CENTER LIST
NO/NO	LEFT	X	0	0	Key Rem Pos.								
	RIGHT	0	0	X	LEFT	W22KS3-KRL-10/10	$57.20	—	—	W22KSRC-KRL-10/10	$60.20	—	
					RIGHT	W22KS3-KRR-10/10	$57.20	W22KSLC-KRR-10/10	$60.20	—	—	—	
					CENTER	W22KS3-KRC-10/10	$57.20	W22KSLC-KRC-10/10	$60.20	W22KSRC-KRC-10/10	$60.20	W22KSAC-KRC-10/10	$60.20
					Key Rem Pos.								
					L & C	W22KS3-KRLC-10/10	$57.20	—	—	W22KSRC-KRLC-10/10	$60.20	—	—
					R & C	W22KS3-KRRC-10/10	$57.20	W22KSLC-KRRC-10/10	$60.20	—	—	—	—

IT'S EASY TO BUILD YOUR OWN CONTROL STATION

Simply pick the code number from each of the sections below and combine them to build your part number.

Compact Control Stations (Polycarbonate)

EC	W22		–		–					–					–				
I	II	III	IV	V	VI	VII	VIII			V	VI	VII	VIII		V	VI	VII	VIII	
				Position 1						Position 2					Position 3				

Example: To build one of our most popular Control Stations, the part number would be **EC + W22 + III + IV + V + VI + VII + VIII** or **ECW22V-H2P1-04R23-01G22**

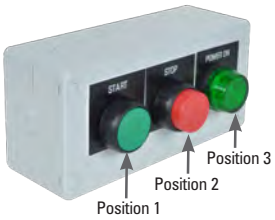

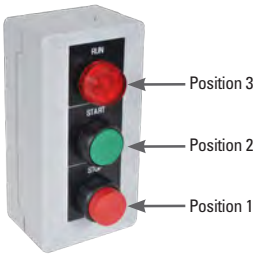

I. ENCLOSURE CONSTRUCTION

CODE	DESCRIPTION
EC	Enclosed Control Station (Polycarbonate)

II. HOLE DIAMETER

CODE	DESCRIPTION
W22	22.5mm (7/8")

III. CONDUIT ENTRY ORIENTATION

CODE	DESCRIPTION
V	Vertical
H	Horizontal*

*NOTE: Dual Push Button operators available in horizontal orientation only.

IV. NUMBER OF POSITIONS & ENCLOSURE DIMENSION

CODE	# OF POSITIONS	COVER COLOR	ENCLOSURE DIMENSION (H x W x D)	LIST
H1P1	1	Grey	75mm x 80mm x 57mm	$ 22.50
H1P1Y	1	Yellow	75mm x 80mm x 57mm	$ 22.50
H2P1	2	Grey	119mm x 80mm x 57mm	$ 30.50
H3P1	3	Grey	163mm x 80mm x 57mm	$ 39.00

Not finding what you need in our assembled compact control stations?

An endless variety of assemblies are available. Our polycarbonate enclosures are optimized for use with our line of 22mm IEC pilot and signaling devices. Consult factory or see page 40 for details.

DISCOUNT SCHEDULE **E**

SEE NEXT PAGE FOR PART BUILDER CHARTS V – VIII

Some of Our Popular Configurations:

COMPACT CONTROL STATIONS

CODE	# OF POSITION(S)	OPERATOR(S)	CAP TYPE/COLOR	CONTACT(S)	LEGEND / COLOR	LIST
ECW22V-H1P1Y-10R04R	1	Push-Twist-Release Main. Non Illum.	40mm Mushroom/Red	NC	Emergency Stop / Yellow	$ 77.60
ECW22H-H1P1-2657	1	Dual-Push Button Mom. Non-Illum.	Flush/Green (Top)	NO	On Off / Black	$ 67.70
			Extended/Red (Bottom)	NC		
ECW22V-H2P1-04R23-01G22	2	2 Push Buttons Mom. Non-Illum.	Flush/Green (Pos. 2)	NO	Start / Black	$ 82.70
			Extended/Red (Pos. 1)	NC	Stop / Black	
ECW22H-H3P1-01G22-04R23-03B18	3	3 Push Buttons Mom. Non-Illum.	Flush/Green (Pos. 1)	NO	Start / Black	$117.30
			Extended/Red (Pos. 2)	NC	Stop / Black	
			Flush/Blue (Pos. 3)	NO	Reset / Black	
ECW22V-H3P1-04R23-01G22-25RMD20	3	Pilot Light	Red/Lens (Pos. 3)	—	Run / Black	$142.00
		2 Push Buttons Mom. Non-Illum.	Flush/Green (Pos. 2)	NO	Start / Black	
			Extended/Red (Pos. 1)	NC	Stop / Black	

CONTROL STATION PART BUILDER (CONT.)

V. OPERATOR TYPE*

CODE	DESCRIPTION	LIST
	MOMENTARY, NON-ILLUMINATED PUSH BUTTON	
01	Flush Cap with 1 NO Contact Block	$22.10
02	Flush Cap with 1 NC Contact Block	$22.10
03	Extended Cap with 1 NO Contact Block	$22.10
04	Extended Cap with 1 NC Contact Block	$22.10
	MAINTAINED, NON-ILLUMINATED 2-POSITION PUSH-PULL	
07	40mm (1-9/16") Mushroom Cap with 1 NO Contact Block	$39.10
08	40mm (1-9/16") Mushroom Cap with 1 NC Contact Block	$39.10
	MAINTAINED, NON-ILLUMINATED 2-POSITION PUSH-TWIST-RELEASE	
09	40mm (1-9/16") Mushroom Cap with Yellow Housing and 1 NO Contact Block	$46.10
10	40mm (1-9/16") Mushroom Cap with Yellow Housing and 1 NC Contact Block	$46.10
	MAINTAINED, NON-ILLUMINATED SELECTOR SWITCH	
11	2 Position with 1 NO Contact Block	$27.20
12	3 Position with 2 NO Contact Blocks	$35.30
	MOMENTARY, ILLUMINATED PUSH BUTTON	
13	Flush Lens with 1 NO Contact Block	$28.10
14	Flush Lens with 1 NC Contact Block	$28.10
15	Extended Lens with 1 NO Contact Block	$28.10
16	Extended Lens with 1 NC Contact Block	$28.10
	MAINTAINED, ILLUMINATED 2-POSITION PUSH-PULL RELEASE	
19	40mm (1-9/16") Mushroom Lens with 1 NO Contact Block	$34.10
20	40mm (1-9/16") Mushroom Lens with 1 NC Contact Block	$34.10
	MAINTAINED, ILLUMINATED 2-POSITION PUSH-TWIST-RELEASE	
21	40mm (1-9/16") Mushroom Cap with Yellow Housing and 1 NO Contact Block	$59.10
22	40mm (1-9/16") Mushroom Cap with Yellow Housing and 1 NC Contact Block	$59.10
	MAINTAINED, ILLUMINATED SELECTOR SWITCH	
23	2-Position with 1 NO Contact Block	$33.10
24	3-Position with 2 NO Contact Blocks	$41.20
	PILOT LIGHT	
25	Modular Pilot Light	$20.80
	MOMENTARY, DUAL PUSH BUTTON**	
26	Non-Illuminated, Extended Red (Bottom) with 1 NC Contact Block and Flush Green (Top) with 1 NO Contact Block	$40.20
27	Illuminated, Extended Red (Bottom) with 1 NC Contact Block and Flush Green (Top) with 1 NO Contact Block and Clear Lens (Middle)	$40.20

NOTE: *All operators come standard with a black polyester (Type 4X) clamp ring.
**Dual Push Button operators available in horizontal conduit entry orientation only.

See page 45 for Lamp Replacement Chart and page 46 for Lamp Technical Data.

c3controls LED lamps last 100,000 hours—that's 11.4 years!

VI. OPERATOR CAP/LENS COLOR

		FOR USE WITH OPERATOR TYPES	
CODE	COLOR	NON-ILLUMINATED OPERATOR CODES	ILLUMINATED OPERATOR CODES
(Blank)	None*	26	27
A	Amber	—	13, 14, 15, 16, 19, 20, 23, 24, 25
K	Black	01, 02, 03, 04	—
B	Blue	01, 02, 03, 04, 11, 12	13, 14, 15, 16, 25
C	Clear	—	25
G	Green	01, 02, 03, 04, 07, 08	13, 14, 15, 16, 19, 20, 23, 24, 25
E	Grey	01, 02, 03, 04, 11, 12	—
R	Red	01, 02, 03, 04, 07, 08, 09, 10, 11, 12	13, 14, 15, 16, 19, 20, 21, 22, 23, 24, 25
W	White	01, 02, 03, 04, 11, 12	13, 14, 15, 16, 23, 24

*NOTE: Dual Push Button operators come standard with Extended Red (Bottom) and Flush Green (Top). Consult factory if you require a different color.

VII. ILLUMINATION

CODE	LIGHT MODULE	VOLTAGE	LAMP TYPE/COLOR	LIST
(Blank)	None*	—	—	—
	*NOTE: For use with non-illuminated operators only.			
MC	Full Voltage	24V AC/DC	LED**	$26.00
MD	Full Voltage	120V AC/DC	LED**	$26.00
MV	Multi-Voltage, Non-Relampable	20-277V AC/DC	LED/White	$37.00

**NOTE: LED lamp color will match selected lens color.

VIII. LEGEND PLATE*

CODE	LEGEND** LEFT/TOP	LEGEND CENTER	LEGEND** RIGHT/BOTTOM	LIST
(Blank)	No Legend Plate			—
00		(Blank)		$ 4.00
01		AUTO		$ 4.00
02		CLOSE		$ 4.00
03		DOWN		$ 4.00
04		EMERGENCY STOP		$ 4.00
04R		EMERGENCY STOP***		$ 9.00
07		FORWARD		$ 4.00
12		OFF		$ 4.00
13		ON		$ 4.00
14		OPEN		$ 4.00
16		POWER ON		$ 4.00
18		RESET		$ 4.00
20		RUN		$ 4.00
22		START		$ 4.00
23		STOP		$ 4.00
25		UP		$ 4.00
56	OFF		ON	$ 5.00
57	ON		OFF	$ 5.00
61	START		STOP	$ 5.00
72	UP		DOWN	$ 5.00
83	HAND	OFF	AUTO	$ 5.00

NOTE: *Legend plates are standard 1-3/4" x 1-3/4" (h x w) and face color is black with white letters (uppercase) unless otherwise specified. Consult factory for details.
**Top and bottom text location for Dual Push Buttons only.
***The 04R Emergency Stop legend plate, for use with a 1 position enclosure only, is round 2-13/32" diameter and face color is yellow with black letters (uppercase).

22mm IEC Compact Control Stations – Polycarbonate

Our 22mm IEC Compact Control Stations feature polycarbonate construction for superior corrosion resistance, moisture rejection, UV resistance, electrical insulation and high-impact resistance. A variety of pilot devices are available, including non-illuminated and illuminated push buttons, emergency stop push buttons, momentary dual push buttons (flush green and extended red), maintained selector switches (2- and 3-position), and pilot lights for operation and indication. Designed for the most severe outdoor conditions, enclosures are suitable for use in equipment with vibration, frequent wash-down and varying temperatures from -40 to +55° C.

Product Features

- Factory assembly of our 22mm IEC Compact Control Stations provide the convenience of a single catalog number, no assembly required, shorter control panel bill of materials, and easier inventory management.
- Contact blocks available up to one deep and three across providing multiple circuits in a compact space.
- Our compact, high performance, polycarbonate enclosures are UL Listed and are rated for Type 1, 2, 3, 3R, 4/4X, 12, 13 and IP66, making them suitable for the most demanding applications – including wash-downs and corrosive environments.
- Manufactured with all stainless steel hardware including #8 thread form screws, ensuring 100% reliability in corrosive environments.
- For easy installation, the enclosure has two lateral M20 conduit entries and two base conduit entries.
- Enclosure cover is keyed for enhanced safety and to prevent misalignment during installation.
- Screw cover accessory, included as standard, prevents debris build-up.

UNIQUE PRODUCT FEATURES

Designed with Seamless Compatibility in Mind!

1. The compact design of our polycarbonate enclosure is a custom fit specifically optimized for use with our 22mm IEC pilot and signaling devices—leading the industry with the shortest depth behind the panel.

2. All c3controls 22mm IEC pilot and signaling devices, including illuminated options with up to three contact blocks, are compatible for factory assembly and installation with our new polycarbonate enclosure. See page 40 for details.

3. The panel gasket provides an environmentally secure fit—creating a squeegee effect and forming a permanent watertight seal that provides Type 4/4X and IP66 ingress protection.

POLYCARBONATE ENCLOSURES

Polycarbonate Enclosures – Optimized for use with 22mm IEC Pilot and Signaling Devices

POLYCARBONATE ENCLOSURE CONFIGURATION

CODE	# OF HOLES	FRAME DIMENSIONS (H x W x D)	COLOR	LIST
ECP1-A22H1	1	75mm x 80mm x 57mm (2-61/64" x 3-5/32" x 2-1/4")	Grey	$22.50
ECP1-A22H1Y	1	75mm x 80mm x 57mm (2-61/64" x 3-5/32" x 2-1/4")	Yellow	$22.50
ECP1-B22H2	2	119mm x 80mm x 57mm (4-11/16" x 3-5/32" x 2-1/4")	Grey	$30.50
ECP1-C22H3	3	163mm x 80mm x 57mm (6-27/64" x 3-5/32" x 2-1/4")	Grey	$39.00

DISCOUNT SCHEDULE E

Construction

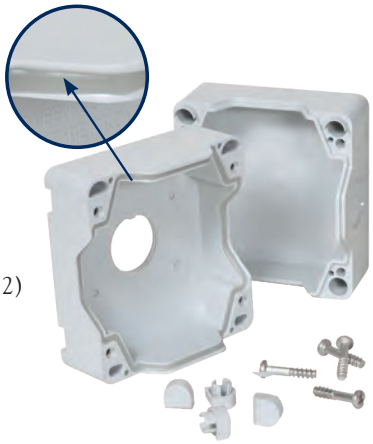

- Rugged Polycarbonate construction, lightweight with high impact resistance.
- UV and corrosion resistant.
- Stainless steel hardware including #8 thread form screws.
- Enclosure cover is keyed for enhanced safety and to prevent misalignment during installation.
- Screw cover accessory, included as standard, to prevent debris build-up.
- For easy installation, the enclosure has two (2) lateral M20 conduit entries and two (2) base conduit entries.
- Standard colors: Grey and Yellow
- Available as fully-assembled control stations, see pages 37-39.

Ratings / Approvals

- UL Listed Type 1, 2, 3, 3R, 4/4X, 12, 13
- IP66 protection
- Operating temperatures from -40 to +55° C (-40 to +131° F)

Endless Possibilities

The compact design of our Polycarbonate Enclosure is a custom fit optimized for use with our 22mm IEC pilot and signaling devices—leading the industry with the shortest depth behind the panel.

We offer the option to configure and assemble the control station for you, under a single catalog number. Your control station will arrive factory assembled providing a shorter bill of material, reducing installation time, simplifying inventory management, and ultimately reducing cost.

Ordering a custom assembled compact control station is easy. Either choose from our already pre-configured assemblies on pages 37-39 or,

- Simply choose your enclosure frame size and number of holes, see options above.
- Select your operator(s) from our line of 22mm IEC pilot and signaling devices, see pages 6-36.
- Select your legend plate style, color, and designation, see page 41.
- Contact the c3controls factory to complete your order.
- Custom assembled compact control stations are not available for guaranteed same-day shipping—ships within 3 days.

MOUNTING FOOT KIT

Field installable mounting foot kit enables enclosure to be panel mounted and includes mounting feet and screws.

DISCOUNT SCHEDULE E

CODE	DESCRIPTION	LIST
ECP1-MFKIT	Mounting Foot Kit (4 mounting feet and screws)	$ 8.00

IT'S EASY TO BUILD YOUR OWN LEGEND PLATE

Simply pick the code number from each of the sections below and combine them to build your part number:

Legend Plates

_____ _____ – _____ – _____

I *II* *III* *IV*

Legend plates feature 2 lines of text with approximately 16 characters per line. Uppercase is standard unless specified.

*The short legend plate (22LPS) features 1 line of text with approximately 16 characters and the Potentiometer legend plate comes standard with a scale and one or two lines of text, see chart D below.

**The Dual Push Button legend plates (22LPDHL, 22LPDHR &22LPDV) feature one line of text for each of the two push buttons, 5 characters per line.

I. LEGEND PLATE TYPE

CODE	DESCRIPTION	LIST
	FOR USE WITH 22MM IEC OPERATORS	
22LP	Standard 1-3/4"h x 1-3/4"w	$ 4.00
22LPN	Narrow 1-3/4"h x 1-1/2"w	$ 4.00
22LPS	Short 1-1/2"h x 1-3/4"w*	$ 4.00
22LPT	Tall 2"h x 1-3/4"w	$ 5.00
22LPJ	Jumbo 2"h x 2"w	$ 5.00
22LPR	Standard Round 2-13/32" Dia.	$ 9.00
22LPRM	Medium Round 2-3/4" Dia.	$11.00
22LPRJ	Jumbo Round 3-3/4" Dia.	$12.00
22LPDHL	Text left of Dual Push Buttons (one line top, one line bottom, 5 characters per line) 51mm h x 48mm w**	$ 5.00
22LPDHR	Text right of Dual Push Buttons (one line top, one line bottom, 5 characters per line) 51mm h x 48mm w**	$ 5.00
22LPDV	Vertical—One line above (one line below Dual Push Buttons, 5 characters per line) 71mm h x 28mm w**	$ 5.00
	FOR USE WITH POLYCARBONATE ENCLOSURES OPTIMIZED FOR 22MM IEC OPERATORS	
22ECLP	Standard 1-47/64" h x 1-47/64" w	$ 4.00
22ECLPR	Round 2-21/64" Dia.	$ 9.00

II. FACE AND LETTER COLOR

CODE	FACE COLOR	LETTER COLOR
AL	Aluminum	Black
(Blank)	Black	White
BE	Blue	White
GN	Green	White
RD	Red	White
WE	White	Black
YW	Yellow	Black

SEE NEXT PAGE FOR PART BUILDER CHART III

DISCOUNT SCHEDULE E

Some of Our Popular Configurations:

LEGEND PLATES

CATALOG NO.	DESIGNATION	LIST
22LPRYW-04	EMERGENCY STOP	$9.00
22LP-22	START	$4.00
22LPT-83	HAND OFF AUTO	$5.00

LEGEND PLATE PART BUILDER (CONT.)

III. LEGEND DESIGNATION

A. PUSH BUTTONS AND LIGHTS

CODE	DESCRIPTION
00	(Blank)
01	AUTO
02	CLOSE
31	CYCLE START
100	CYCLE STOP
03	DOWN
102	EMERGENCY
04	EMERGENCY STOP
06	FAST
101	FAULT
07	FORWARD
08	HAND
32	HIGH
33	IN
09	INCH
10	JOG
38	JOG FORWARD
39	JOG REVERSE
34	LOW
35	LOWER
11	MANUAL
26	MOTOR RUN
12	OFF
13	ON
14	OPEN
36	OUT
27	OVERLOAD
15	POWER OFF
16	POWER ON
30	PUSH TO RESET
17	PUSH TO TEST
37	RAISE
109	READY
18	RESET
19	REVERSE
20	RUN
21	SLOW
22	START
23	STOP
24	TEST
29	TRIP
25	UP

B. 2-POSITION SELECTOR

CODE	LEGEND LEFT	LEGEND RIGHT
00	(Blank)	(Blank)
50	AUTO	HAND
68	AUTO	MANUAL
51	DOWN	UP
63	FAST	SLOW
52	FWD	REV
53	HAND	AUTO
73	HIGH	LOW
54	INCH	RUN
75	LEFT	RIGHT
70	LOCAL	REMOTE
55	MANUAL	AUTO
56	OFF	ON
57	ON	OFF
58	OPEN	CLOSE
65	PULL START	PUSH STOP
66	PUSH OFF	PULL ON
64	PUSH ON	PUSH OFF
67	PUSH TO STOP	PULL TO START
71	RAISE	LOWER
59	REV	FWD
60	RUN	JOG
69	SLOW	FAST
61	START	STOP
62	STOP	START
74	SUMMER	WINTER
72	UP	DOWN

C. 3-POSITION SELECTOR

CODE	LEGEND LEFT	LEGEND CENTER	LEGEND RIGHT
00	(Blank)	(Blank)	(Blank)
108	A	0	H
92	AUTO	OFF	HAND
93	AUTO	MAN	OFF
80	DOWN	OFF	UP
81	FWD	AUTO	REV
82	FWD	OFF	REV
107	H	0	A
83	HAND	OFF	AUTO
94	HIGH	OFF	LOW
99	JOG	OFF	AUTO
90	LOCAL	OFF	REMOTE
84	MANUAL	OFF	AUTO
89	OFF	RUN	START
85	OFF	START	RUN
86	OFF	1	2
95	OPEN	OFF	CLOSE
91	RAISE	OFF	LOWER
96	SLOW	OFF	FAST
97	SUMMER	OFF	WINTER
98	UP	OFF	DOWN
87	1	OFF	2
88	1	2	3

D. POTENTIOMETER

CODE	DESCRIPTION
40	Blank Legend 0 - 10
41	"SPEED" 0 - 10
43	Blank Legend 0 - 100
44	"SPEED" 0 - 100

E. DUAL PUSH BUTTONS

CODE	LEGEND TOP	LEGEND BOTTOM
00	(Blank)	(Blank)
63	FAST	SLOW
52	FWD	REV
57	ON	OFF
71	RAISE	LOWER
60	RUN	JOG
61	START	STOP
62	STOP	START
72	UP	DOWN

IV. ADHESIVE BACK

CODE	DESCRIPTION
(Blank)	No Adhesive Back
A	Adhesive Back

Not finding what you need in a standard plate?

We offer Special and Custom Engraving up to 12" x 24" (304.8mm x 609.6mm). Consult factory or see page 43 for details. While our standard legend plates are available for same day shipping, our special and custom legend plates are not.

IT'S EASY TO BUILD YOUR OWN LEGEND PLATE

Simply pick the code number from each of the sections below and combine them to build your part number.

Special Legend Plates

_____ _____ – SP – _____

I II III IV

All legend plates are a 2-ply laminated plastic, laser engraved for a permanent and quality appearance.

Uppercase is standard unless specified.

I. LEGEND PLATE TYPE

CODE	DESCRIPTION	LIST
FOR USE WITH 22MM IEC OPERATORS		
22LP	Standard 1-3/4"h x 1-3/4"w	$ 4.00
22LPN	Narrow 1-3/4"h x 1-1/2"w	$ 4.00
22LPS	Short 1-1/2"h x 1-3/4"w*	$ 4.00
22LPT	Tall 2"h x 1-3/4"w	$ 5.00
22LPJ	Jumbo 2"h x 2"w	$ 5.00
22LPR	Standard Round 2-13/32" Dia.	$ 9.00
22LPRM	Medium Round 2-3/4" Dia.	$11.00
22LPRJ	Jumbo Round 3-3/4" Dia.	$12.00
FOR USE WITH POLYCARBONATE ENCLOSURES OPTIMIZED FOR 22MM IEC OPERATORS		
22ECLP	Standard 1-47/64" h x 1-47/64" w	$ 4.00
22ECLPR	Round 2-21/64" Dia.	$ 9.00

Legend plates feature 2 lines of text with approximately 16 characters per line.

*The short legend plate (22LPS) features 1 line of text with 16 characters per line.

II. FACE AND LETTER COLOR

CODE	FACE COLOR	LETTER COLOR
AL	Aluminum	Black
(Blank)	Black	White
BE	Blue	White
GN	Green	White
RD	Red	White
WE	White	Black
YW	Yellow	Black

III. LEGEND DESIGNATION

CODE	DESCRIPTION	LIST
SP	Special Legend	$14.00

IV. ADHESIVE BACK

CODE	DESCRIPTION
(Blank)	No Adhesive Back
A	Adhesive Back

Upon receipt of your order, legend plates will be set-up as specified and a proof will be sent to you prior to production to ensure accuracy.

To order, submit your drawing to:

Mail: c3controls
Attn: Customer First
PO Box 496
Beaver, PA 15009

Fax: 724.775.5283

Email: legendplates@c3controls.com

To help simplify your order process, templates are available by calling our factory at 724.775.7926 or reference one of the drawings shown on page 55.

Special legend plates are not available for same day shipping.

DISCOUNT SCHEDULE **E**

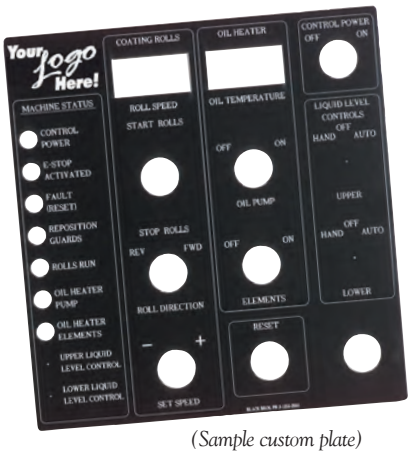

(Sample custom plate)

Custom Legend Plates

- ***Add your Corporate Logo!*** Send us your corporate logo electronically to promote your company image in a clean professional legend plate.
- Available in 2-ply 304.8mm x 609.6mm (12" x 24") sheets of laminated plastic for custom laser engraving.
- To order, specify part number 22LP-CP (no adhesive back) or 22LP-CP-A (adhesive back).
- Initial Set-Up Fee Per Legend Plate: $50/hour (minimum fee $50.00).
- $2.00/Square Inch (minimum $18.00).
- Design services available. Consult factory for details and hourly rate.
- Custom legend plates are not available for same-day shipping.

To order, submit your drawing to:

Mail: c3controls
Attn: Customer First
PO Box 496
Beaver, PA 15009

Fax: 724.775.5283

Email: legendplates@c3controls.com

THRUST & TRIM WASHERS

Trim washer is not necessary when using a legend plate.

CODE	DESCRIPTION	LIST
22TWH	Thrust Washer	$ 4.00

LAMP REMOVAL TOOL

Used to facilitate the removal of lamps particularly in illuminated push buttons and push-to-test operators.

CODE	DESCRIPTION	LIST
LRT	Lamp Removal Tool	$ 8.00

CLAMP RING WRENCH

To simplify tightening and loosening of polyester clamp rings. Won't scratch your panel.

CODE	DESCRIPTION	LIST
W22CRW	Clamp Ring Wrench	$25.00

LATCHING DEVICE

The latching mechanism allows for easy installation and wiring for up to three contact blocks across. Fits all 22mm IEC operators (except Unibody Lights).

CODE	DESCRIPTION	LIST
W22-LD	Latching Device	$ 6.90

HOLE PLUGS

Use to close and seal unused 22.5mm (7/8") panel holes. Manufactured with integral "O" ring seal molded on both sides to provide Type 4X rating.

CODE	COLOR	LIST
HP22BK	Black	$11.00
HP22GY	Grey	$11.00

LOCK OFF ATTACHMENT

Our lock off attachment permits padlocking most 22mm operators.

Note: This product is not compatible with Jumbo Mushroom caps, Dual Push Buttons, and Selector Switches with lever handles.

CODE	FITS	LIST
22LOAFC	Most 22mm Push Buttons & Selector Switches	$50.00

DISCOUNT SCHEDULE E

LED & INCANDESCENT REPLACEMENT LAMPS

c3controls offers a full range of lamp options in a miniature bayonet base for direct interchangeability which provides flexibility in choosing the best lamp for each installation application. Multiple voltage options in Incandescent and LED lamps are available. Please refer to the chart below to determine the appropriate replacement lamp based on your operator voltage. For lamp technical data, see page 46.

LED Lamps

LED _____ _____

I *II* *III*

To order LED Lamps, the part number would be LED + II + III

I. LAMP TYPE

CODE	DESCRIPTION	LIST
LED	LED Lamp	$28.00

II. VOLTAGE

CODE	DESCRIPTION
6	6V
12	12V
24	24V
130	130V

Our LED lamps feature built-in leakage protection.

III. LAMP COLOR

CODE	DESCRIPTION
AR	Amber
BE	Blue
GN	Green
RD	Red
WE	White

22MM IEC REPLACEMENT LAMP REFERENCE CHART
(FOR REFERENCE ONLY - USE CHARTS ABOVE TO ORDER)

OPERATOR CODE	OPERATOR VOLTAGE	LED (ALL COLORS)	INCANDESCENT
FM6	Full Voltage 6V AC/DC	LED6	FVB6 or FVB6F
FM12	Full Voltage 12V AC/DC	LED12	FVB12
FM24	Full Voltage 24V AC/DC	LED24	FVB24
FM120	Full Voltage 120V AC/DC	LED130	FVB120

Incandescent Lamps

CODE	VOLTAGE	LIST
FVB6	6V	$ 4.00
FVB12	12V	$ 4.00
FVB24	24V	$ 4.00
FVB55	55V	$ 8.00
FVB120	120V	$ 8.00
FVB6F	6V Flashing*	$12.00

*NOTE: There may be a 5-15 second delay before flashing begins.

DISCOUNT SCHEDULE E

22MM IEC PILOT DEVICES

ELECTRICAL RATINGS

Lamp	Industry Number	Rated Volts	Lumens (MSCD)	Design Life (Hrs.)	Current Draw (mA)	Lamp Type	Shock & Vibration	Leakage Protection
FVB6	1866	6.3V	0.65	5,000	250	Incandescent	Very Good	N/A
FVB12	756	14V	0.31	15,000	80	Incandescent	Good	N/A
FVB24	757	28V	0.62	7,500	80	Incandescent	Good	N/A
FVB55	1835	55V	1.1	5,000	50	Incandescent	Good	N/A
FVB120	**	130V	0.36	10,000	20	Incandescent	Good	N/A
LED6	**	6V†	Varies w/ Color 2000 mcd Typical	100,000	50	LED*	Excellent	14 mA
LED12	**	12V†		100,000	<20	LED*	Excellent	4 mA
LED24	**	24V†		100,000	<20	LED*	Excellent	4 mA
LED130	**	120/130V†		100,000	<10	LED*	Excellent	2 mA
W22UNR-12L	**	12V AC/DC†	Varies w/ Color 2000 mcd Typical	100,000	<18	LED*	Excellent	<3 mA
W22UNR-24L	**	24V AC/DC†		100,000	<18	LED*	Excellent	<3 mA
W22UNR-120L	**	110-130V AC/DC†		100,000	<18	LED*	Excellent	<3 mA
W22UNR-240L	**	220-240V AC†		100,000	<18	LED*	Excellent	<3 mA

* Specify lamp color when ordering

** Designates a lamp design optimized for c3controls Illuminated Devices. See LED replacement lamps on page 45.

† LED voltage tolerance is +/-10%

MULTI-VOLTAGE POWER CONSUMPTION & CURRENT DRAW

System Voltage (V)	AC Current Draw (mA)	DC Current Draw (mA)	Power Consumption (W)
24	21	20	AC: <1 DC: <1/2
48	17	7	
120	3.5	—	
125	—	3	
240	2.5	—	
250	—	2	
277	2.5	—	

DIELECTRIC STRENGTH (MECHANICAL CONTACTS) 2200V FOR 1 MINUTE

STANDARD CONTACTS

	Utilization Category					
		IEC	UL	Make Rating	Break Rating	Ith-Thermal Current
	AC	AC-15	A600	7200VA	720VA	10A
	DC	DC-13	Q600	69VA	69VA	2.5A

NOTE: For AC voltage below 72V AC the maximum allowed switching current is 10A=Ith. For DC voltages below 28V DC the maximum allowed switching current is 2.5A=Ith.

	UNITS	
ENVIRONMENTAL RATINGS		
Operators		Rated and Certified for use in Type 1, 2, 3, 3R, 4/4X, 12 & 13
		IP-66 [per EN60529]
Operating Temperature	°C / °F	-40 to +55 / -40 to +131
Storage Temperature	°C / °F	-40 to +85 / -40 to +185

NOTE: Operating Environments for below freezing temperatures are assumed to be absent of freezing liquids or pollutants.

TERMINAL & WIRING CONSIDERATION		
AWG Conductor		22-12 CU (Copper Only - Solid & Stranded) [.5 ~ 4mm^2] One or Two wires permitted per termination
Recommended Torque	Lb-in. [Nm]	7 – 10 [.8]

22MM IEC PILOT DEVICES (CONTINUED)

	UNITS	
CONSTRUCTION		
OPERATING FORCES		
PUSH BUTTONS (OPERATORS ONLY)		
Momentary	lbs. [N]	1.0 [4.45]
Illuminated (Momentary)	lbs. [N]	1.0 [4.45]
Maintained	lbs. [N]	1.0 [4.45]
Illuminated 2-Position (Maintained)	lbs. [N]	8.13 [36.18]
Illuminated 3-Position (Maintained Center and Depressed)	lbs. [N]	8.13 [36.18]
Illuminated 3-Position (All to Center)	lbs. [N]	11.5 [51.187]
SELECTOR SWITCHES (OPERATORS ONLY)		
Maintained	in-lbs. [Nm]	1.5 [.17]
Momentary	in-lbs. [Nm]	1.5 [.17]
Key Operated Maintained	in-lbs. [Nm]	1.5 [.17]
Key Operated Momentary	in-lbs. [Nm]	1.5 [.17]
CONTACT BLOCKS (SINGLE POLE)		
NO/EM	lbs. [N]	.80 [3.56]
NC/DB	lbs. [N]	.55 [2.45]
INDICATING LIGHTS		Refer to the appropriate Lamp Data
MECHANICAL ENDURANCE		
PUSH BUTTONS		
Momentary	Ops.	5,000,000
Maintained	Ops.	100,000
Dual	Ops.	1,000,000
EMERGENCY STOP (EN418)	Ops.	100,000
SELECTOR SWITCHES	Ops.	500,000
STANDARD CONTACT BLOCKS	Ops.	5,000,000
INDICATING LIGHTS		Refer to the appropriate Lamp Data
MATERIALS		
Operator Housings (Glass Reinforced Grades)		Thermoplastic Polyester and Polyester Blends (UV Stabilized for outdoor use)
Operator Caps and Handles - Non-Illuminated (Glass Reinforced Grades)		Thermoplastic Polyester and Polyester Blends (UV Stabilized for outdoor use)
Mounting Rings and Nuts (Glass Reinforced Grades)		Thermoplastic Polyester and Polyester Blends (UV Stabilized for outdoor use)
Thrust Washer		Thermoplastic Polyester and Polyester Blends (UV Stabilized for outdoor use)
Trim Washer		Thermoplastic Polyester and Polyester Blends (UV Stabilized for outdoor use)
Pilot Light Lens		High Impact Polycarbonate (UV Stabilized for outdoor use)
Transparent Push Buttons and Mushroom Caps		High Impact Polycarbonate (UV Stabilized for outdoor use)
Certain CAM and Bearing Parts		Custom Polymers: Teflon, Silicon and Moly-Disulfide impregnated for improved wearability
Seals		Neoprene Gaskets, BUNA N - Rubber - Teflon Coated, Thermoplastic - Elastomer Molded Seals
Push Pull Bushings		Brass (Plated and Unplated)
Detents for Maintained Devices		Brass (Plated and Unplated)
Springs		Stainless Steel throughout
ROHS COMPLIANCE		For RoHS compliance documentation by product, refer to www.c3controls.com

22MM IEC COMPACT CONTROL STATIONS

	UNITS	
CONSTRUCTION		
Enclosure		Polycarbonate
Assembly Screw		Stainless Steel
Gasket		Formed in place
Enclosure Conduit Entries		2 Lateral M20, (1/2 NPT) & 2 Base M16
Installation Torque (Cover to Base)	Nm [Lb-in.]	1 – 1.4 [8 – 12]
ENVIRONMENTAL RATINGS		
Ingress Protection		UL Listed Type 1, 2, 3, 3R, 4/4X, 12, 13 and IP66
Ambient Operating Temperature	°C / °F	-40 to +55 / -40 to +131
Ambient Storage Temperature	°C / °F	-40 to +85 / -40 to +185
ROHS COMPLIANCE		For RoHS compliance documentation by product, refer to www.c3controls.com

MOMENTARY NON-ILLUMINATED PUSH BUTTONS

Fully-assembled operators come standard with one 1.6mm (1/16") gasket.

Non-Illuminated Operator (shown with Flush Cap)

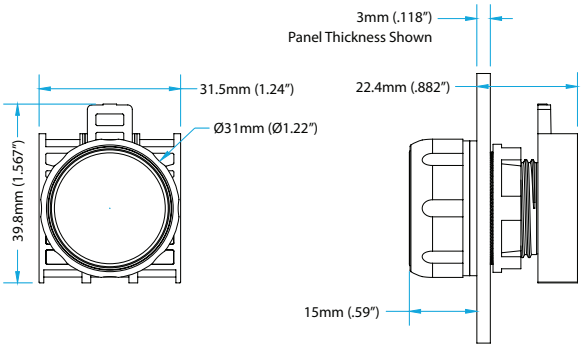

Non-Illuminated Operator (shown with Extended Cap)

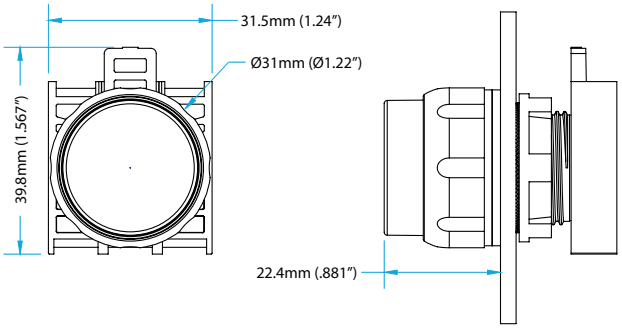

Non-Illuminated Operator (shown with 40mm [1-9/16"] Mushroom Cap)

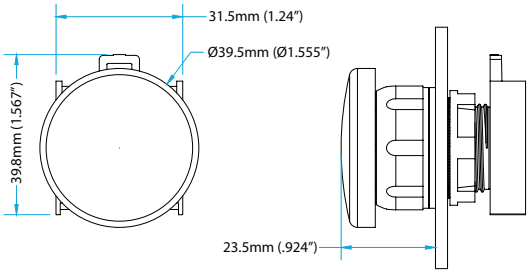

Non-Illuminated Dual Push Button Operator (shown with 1 Flush Cap and 1 Extended Cap)

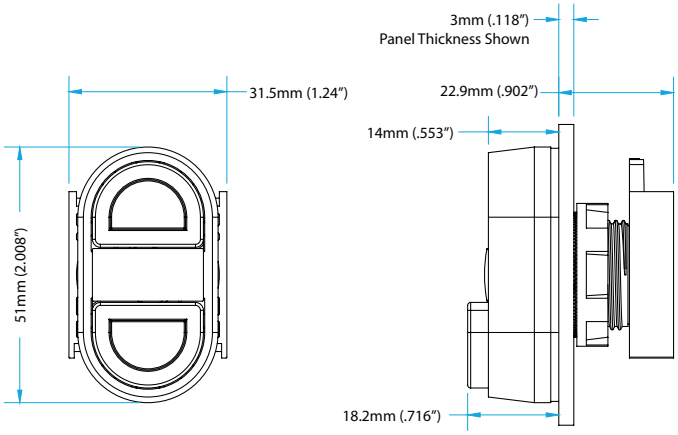

MAINTAINED NON-ILLUMINATED PUSH BUTTONS

Fully-assembled operators come standard with one 1.6mm (1/16") gasket.

2-Position Push-Pull Maintained Non-Illuminated Operator (shown with 40mm [1-9/16"] Mushroom Cap)

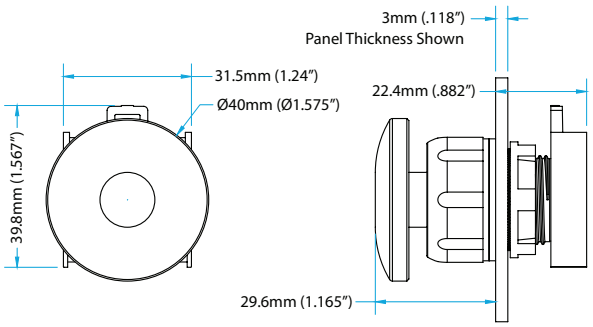

3-Position Push-Pull Maintained Non-Illuminated Operator (shown with 40mm [1-9/16"] Mushroom Cap)

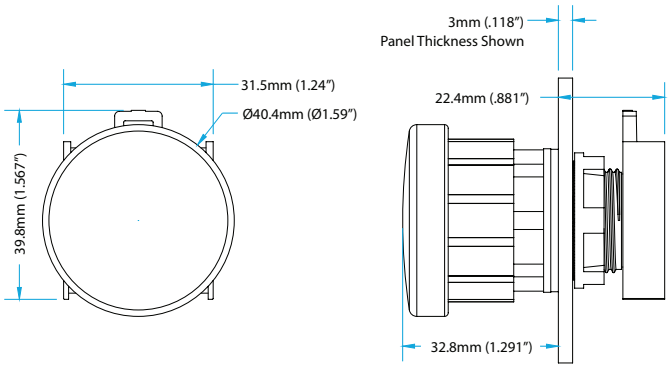

2-Position Push-Twist Release Maintained Non-Illuminated Operator (shown with 40mm [1-9/16"] Mushroom Cap)

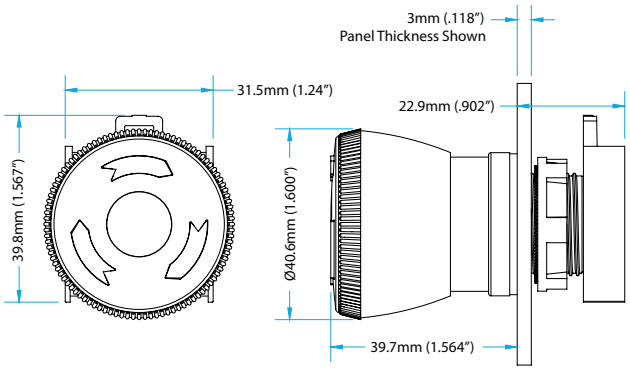

MOMENTARY ILLUMINATED PUSH BUTTONS

Fully-assembled operators come standard with one 1.6mm (1/16") gasket.

Illuminated Full Voltage and Multi-Voltage Operators (shown with Flush Lens)

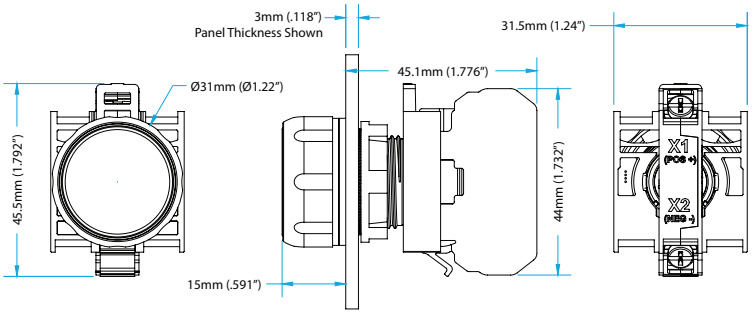

Illuminated Full Voltage and Multi-Voltage Dual Push Button Operators (shown with 1 Flush Cap and 1 Extended Cap)

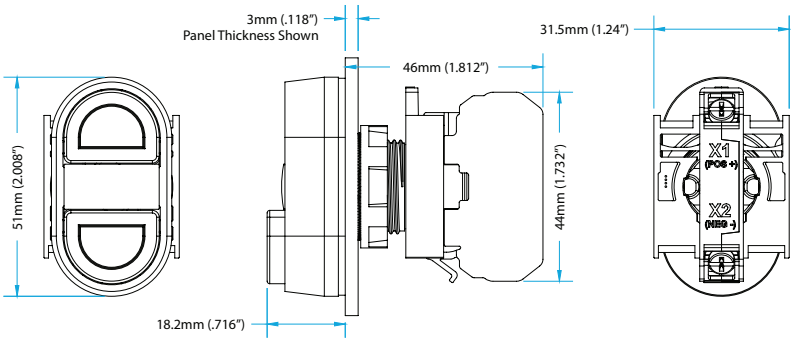

MAINTAINED ILLUMINATED PUSH BUTTONS

Fully-assembled operators come standard with one 1.6mm (1/16") gasket.

2 & 3-Position Push-Pull Maintained Illuminated 40mm (1-9/16") Mushroom Lens (shown with Full Voltage and Multi-Voltage Module)

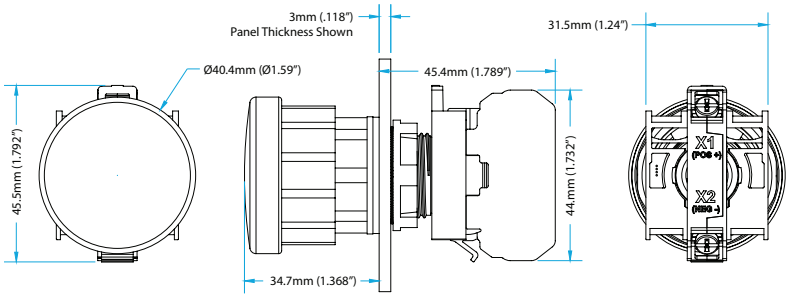

2-Position Push-Twist Release Maintained Illuminated 40mm (1-9/16") Mushroom Cap (shown with Full Voltage and Multi-Voltage Module)

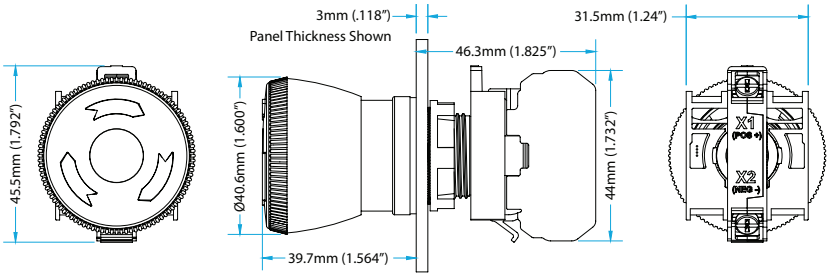

MOMENTARY NON-ILLUMINATED RESET PUSH BUTTONS

Fully-assembled operators come standard with one 1.6mm (1/16") gasket.

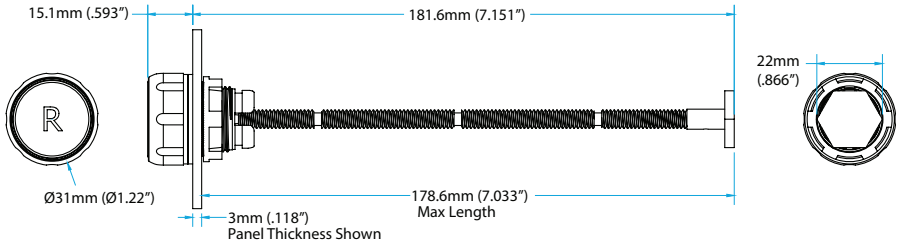

PILOT LIGHTS

Fully-assembled operators come standard with one 1.6mm (1/16") gasket.

Full Voltage Unibody Relampable Pilot Light Operator

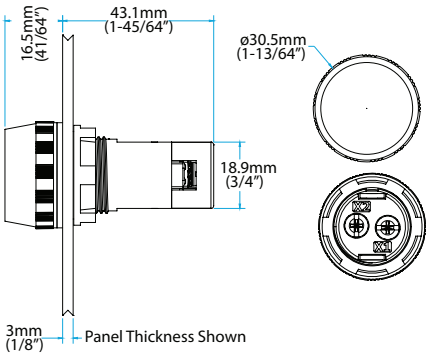

Full Voltage Unibody Non-Relampable Pilot Light Operator

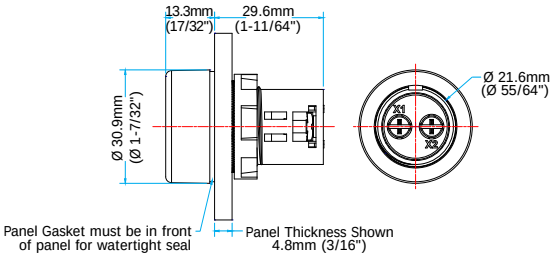

Full Voltage and Multi-Voltage Modular Pilot Light Operators

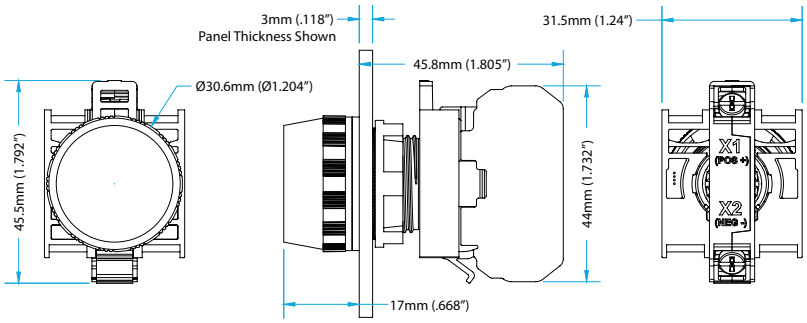

PUSH-TO-TEST PILOT LIGHTS

Fully-assembled operators come standard with one 1.6mm (1/16") gasket.

Full Voltage and Multi-Voltage Operators (shown with Flush Lens)

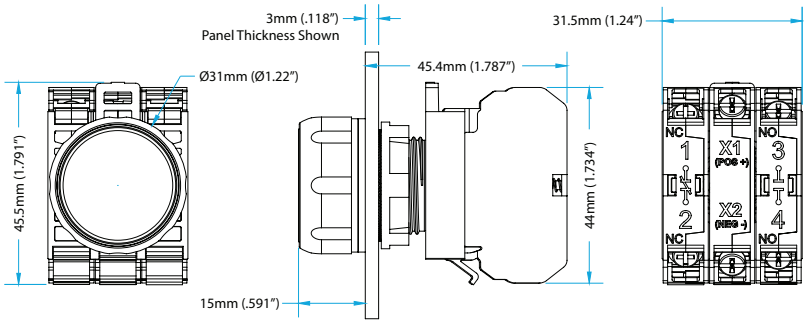

SELECTOR SWITCHES

Fully-assembled operators come standard with one 1.6mm (1/16") gasket.

Non-Illuminated and Illuminated Full Voltage and Multi-Voltage Operators (shown with Standard Handle)

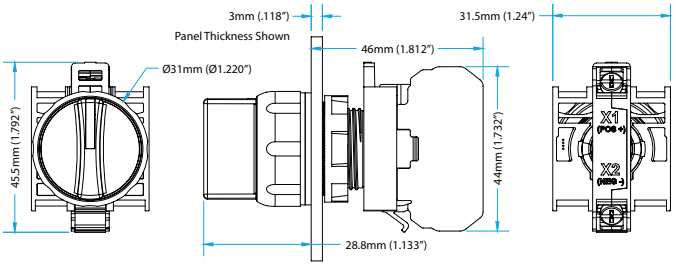

Non-Illuminated and Illuminated Full Voltage and Multi-Voltage Operators (shown with Lever Handle)

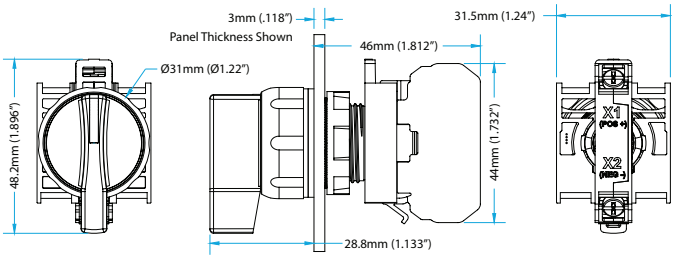

Keyed Selector Switch Operator (vertically mounted)

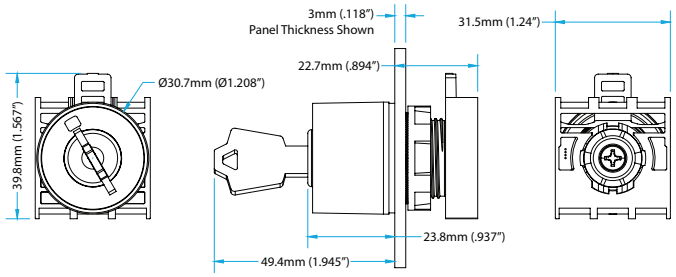

LOCK-OFF ATTACHMENT

22LOAFC

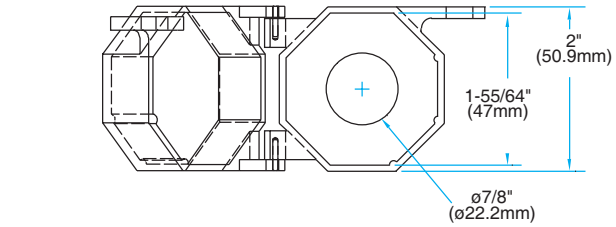

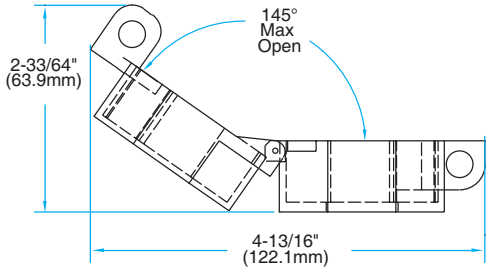

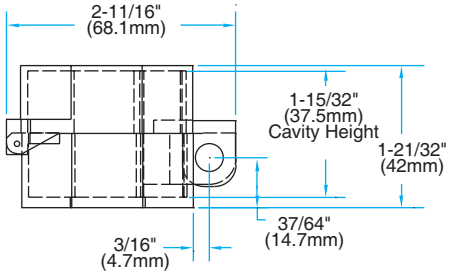

VISIT WWW.C3CONTROLS.COM TO DOWNLOAD CAD DRAWINGS

POTENTIOMETERS

Fully-assembled operators come standard with one 1.6mm (1/16") gasket.

Potentiometer Operator (shown without Terminal Block)

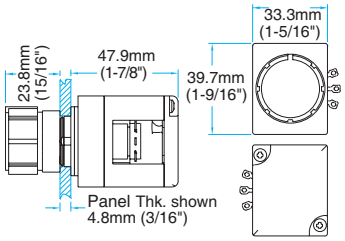

Potentiometer Operator (shown with Terminal Block)

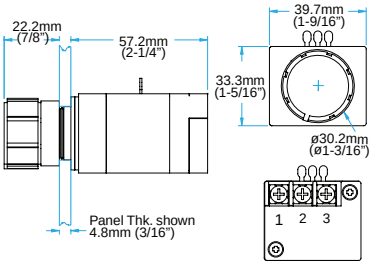

Wiring Diagram

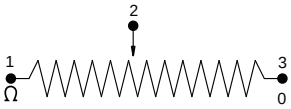

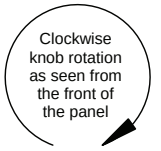

Measuring Between Terminals:

1 & 2 Decreasing Resistance (↓ Ω)

2 & 3 Increasing Resistance (↑ Ω)

2 is the common

LATCHING DEVICE

Contact block latching device for use on all 22mm IEC operators.

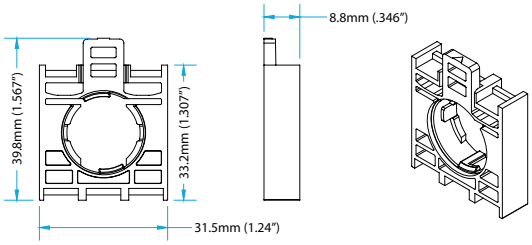

MOUNTING ADAPTER

Mak-1/22

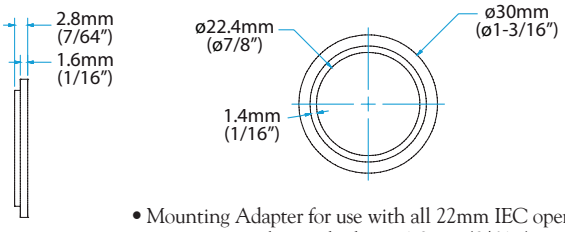

- Mounting Adapter for use with all 22mm IEC operators.
- Maximum enclosure thickness 1.3mm (3/64")
- No gasket is required.

CONTACT BLOCK

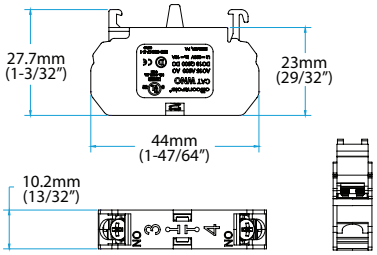

A600 (AC) Rating Designation:
A600 (7,200 VA Make and 720 VA Break),
600V AC Maximum, Maximum Continuous
Thermal Current, Ith: 10A

Q600 (DC) Rating Designation:
Q600 (69 VA Make and 69 VA Break),
600V DC Maximum, Maximum Continuous
Thermal Current, Ith: 2.5A

MOUNTING HOLE PATTERN

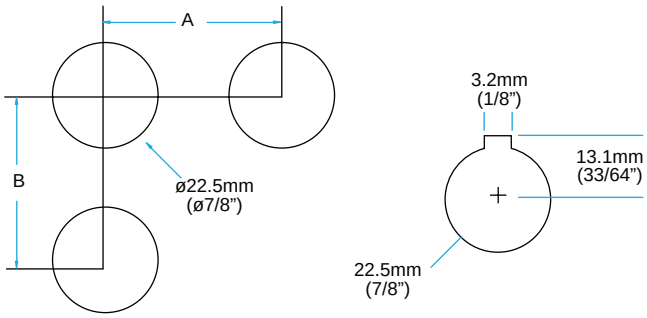

MOUNTING HOLE PATTERN

SPACING	A	B*
Minimum	31.8mm (1-1/4")	47.9mm (1-7/8")
Standard	38.1mm (1-1/2")	57.2mm (2-1/4")
Staggered Contacts	44.5mm (1-3/4")	44.5mm (1-3/4")

*NOTE: When installing illuminated devices vertically adjacent to one another, use the "Standard" Spacing as the "Minimum".

POLYCARBONATE COMPACT CONTROL STATIONS – 1 POSTITION

ECW22*-H1P1 OR ECW22*-H1P1Y

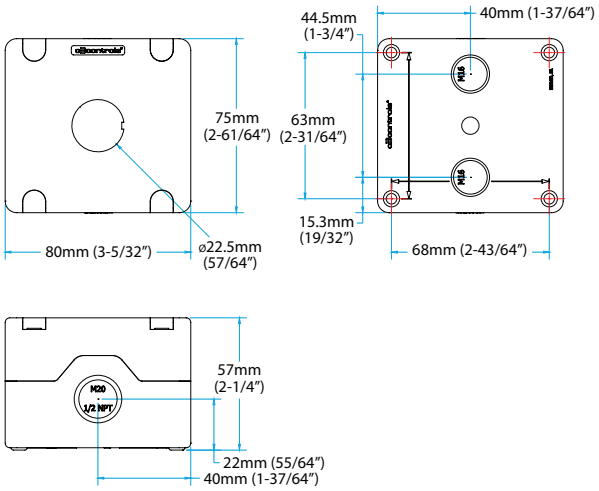

ECW22*-H1P1 OR ECW22*-H1P1Y
(Shown with Emergency Stop Push Button)

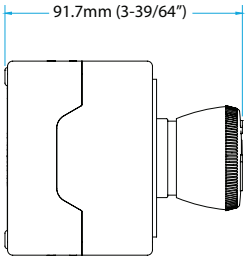

ECW22*-H1P1 OR ECW22*-H1P1Y
(Shown with Selector Switch)

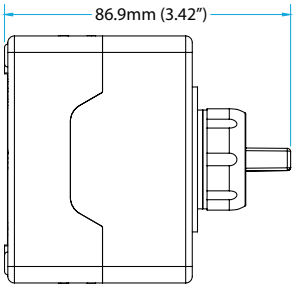

ECW22*-H1P1 OR ECW22*-H1P1Y
(Shown with Flush Push Button)

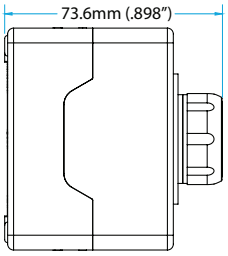

POLYCARBONATE COMPACT CONTROL STATIONS – 2 POSTITION

ECW22*-H2P1

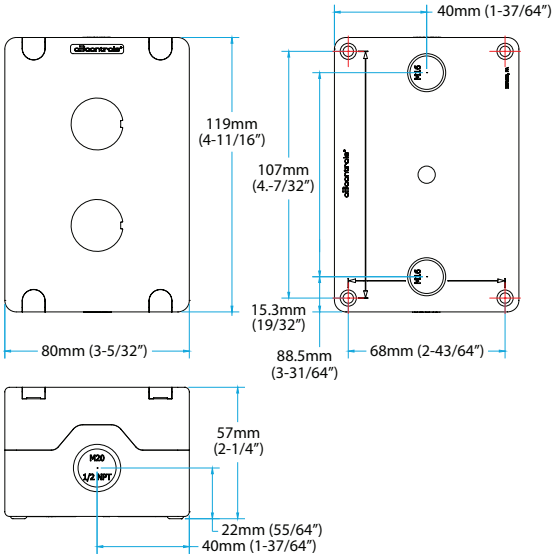

POLYCARBONATE COMPACT CONTROL STATIONS – 3 POSTITION

ECW22*-H3P1

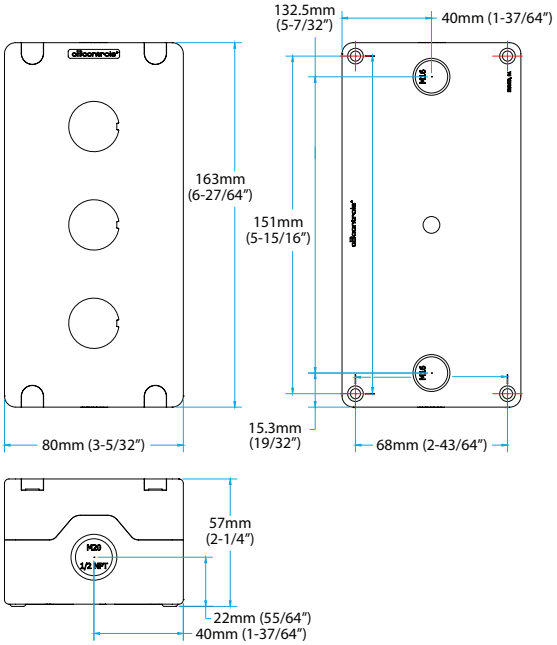

NOTE: *Represents the conduit entry orientation code. Refer to page 37.

LEGEND PLATES

For use with 22mm IEC Operators

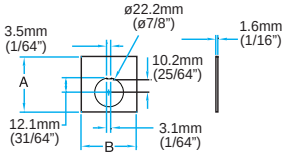

22LP Standard

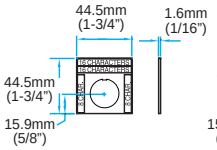

22LPN Narrow

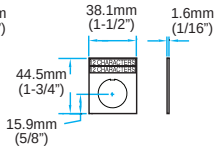

22LPS Short

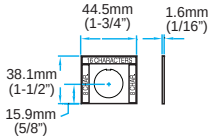

22LPT Tall

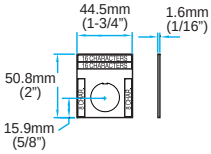

22LPJ Jumbo

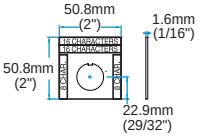

22LP-40 Standard POTO

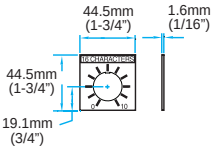

22LPS-40 Short POTO

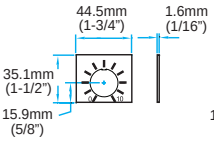

22LPT-40 Tall POTO

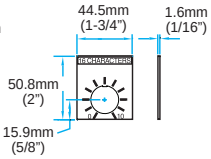

22LPJ-40 Jumbo POTO

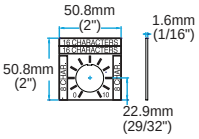

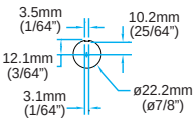

22LPR Standard Round

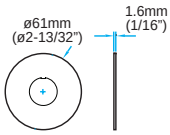

22LPRM Medium Round

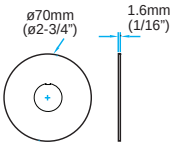

22LPRJ Jumbo Round

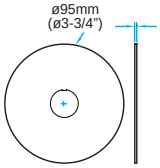

22LPDHL Dual Push Button Horizontal - Left

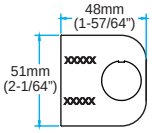

22LPDHR Dual Push Button Horizontal - Right

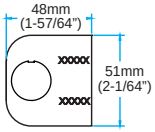

22LPDV Dual Push Button Vertical

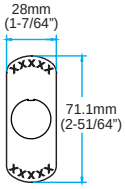

Note: Legend plates feature a tab for optional break-away positioning and can be used in conjunction with the Thrust & Trim Washer accessory.

For use with Polycarbonate Enclosures Optimized for 22mm IEC Operators

22ECLP Standard

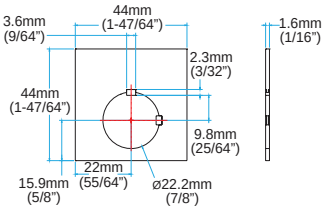

22ECLPR Round

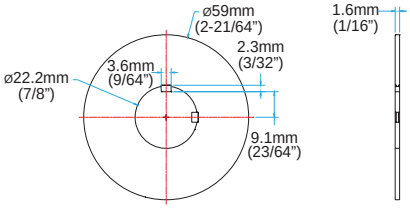

WORLD TOWER LIGHTS

series WTL

When you need reliable, high quality tower lights for all your signaling needs, look to c3controls. Our Series WTL World Tower Lights feature a 50mm (1-31/32") diameter space saving design that is stackable to allow up to five (5) modules in a single assembly. Easy to assemble and disassemble with low power consumption integrated LEDs—no complicated center posts. c3controls Series WTL World Tower Lights will help reduce your total installed costs and enhance the features and performance of your equipment.

Section 16

Tower Lights	4
Components & Accessories	6
Specifications	8
Dimensions	9

PROVEN

Conformity to Standards:
UL 508
CSA C22.2 No. 14 - 13
IEC/EN 60947-1, 60947-5-1

Certifications:
UL File #: E68568

CE Marked (per EU Low Voltage Directive 2014/35/EC and RoHS Directive 2011/65/EU)

Visit c3controls.com to download product certifications.

NOTE: The scope (range, description, price, specifications, dimensions, etc.) of the product featured in this section is subject to change without notice. Refer to c3controls.com for product updates.
REVISION 06.2025

WORLD TOWER LIGHTS

All our products are fully certified, rated, and backed by our 36-month warranty to meet the needs of the machine builder, and our World Tower Lights are no exception. Check out the incredible features in the chart below!

PROVIDING ACCURATE VISUAL AND AUDIBLE STATUS INDICATION.	
✓ **Proven**	Our Tower Lights are UL Listed and CE marked meeting global standards requirements and even more stringent internal test requirements like shock and vibration.
✓ **Wide Range of Operation**	Available in 24V AC/DC, 120V AC, and 240V AC.
✓ **Environmentally Secure**	Rated Type 1, 2, 3, 3R, 4/4X, 12, 13 and IP65 for watertight and corrosion resistance.
✓ **Simple Customization**	Lenses are available in five colors as well as the option of clear lenses and integrated color LEDs for a clean, modern look. Three styles of module illumination are available: continuous, flashing and rotary.
✓ **Consistent Visibility**	c3controls selects the highest quality raw materials to ensure our products outlast the competition, including Lexan™ plastic for our lenses—improving visibility and resistance to high impact for reliable performance, even in high ambient temperatures.
✓ **Energy Savings**	Our low power consumption sound modules are available in continuous or intermittent with 80dB or 100dB output, and our LED lamps last 100,000 hours—that's 11.4 years!
✓ **Heavy-Duty**	Heavy-duty polycarbonate construction for excellent durability, impact resistance, superior corrosion resistance, moisture rejection and electrical insulation.
✓ **Modular Design**	Stackable design to allow up to five (5) modules in a single assembly.
✓ **Durable Bases**	Polycarbonate mounting bases are available in three versions: Our 50mm direct-mount base eliminates the need for drilling and reduces installation. The 50mm short and tall bases secure to the panel utilizing a 4-hole mounting pattern. Vertical mounting with tall and short bases is also available.
✓ **Convenient**	Tower light assemblies provide convenience of a single catalog number.
✓ **36-Month Warranty***	Every product is backed by our 36-Month Warranty—giving you confidence in the quality, reliability, and performance of components designed for the most demanding applications.
✓ **Guaranteed Same-Day Shipping***	Product availability reduces inventory, and improves cash-flow—saving you money. With c3controls any order for standard catalog items received by 6:00pm ET is guaranteed to ship same-day.
✓ **Advantage Pricing**	Our approach to product development, manufacturing, and focus on servicing the OEM and Electrical Equipment Builder reduces cost. The result—the best value in the industry.

*See c3controls Terms & Conditions

> *"c3controls pre-assembled tower lights save installation time for our engineers and technicians, lowering our costs. Switching our tower lights over to c3controls was a great decision—we have reduced time spent on the floor and significantly improved our profitability."*

Paolo Bruschi, Engineering Manager • **Cosmos Electronic Machine Corp.**

LED Light Modules

Sound Modules

Vertical Mount Base

Short Base

Tall Base

Direct-Mount Base

UNIQUE PRODUCT LINE FEATURES

EASY ASSEMBLY AND MAINTENANCE

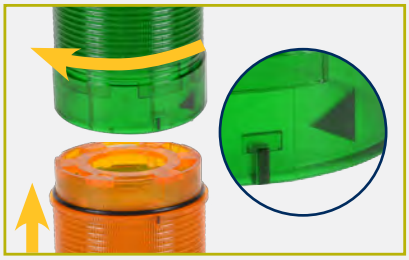

No tools required—simply line up the module marking and arrow and turn; 25° clockwise to tighten and 25° counter clockwise to loosen.

QUICK AND EASY WIRING

Wiring is made simple with our integrated heavy-duty polycarbonate bases. No complicated center post required for construction—just wire to the terminals.

PRE-ASSEMBLED LIGHTS

Tower lights are shipped pre-assembled, providing convenience of a single catalog number, reducing time spent on the floor and improving profitability.

MOUNTING OPTIONS

Polycarbonate mounting bases are available in three versions: Our 50mm direct-mount base eliminates the need for drilling and reduces installation. The 50mm short and tall bases secure to the panel utilizing a 4-hole mounting pattern. Vertical mounting with tall and short bases is also available.

FIELD SELECTABLE DECIBEL LEVEL

Our low power consumption sound modules offer increased tone and are available in continuous or intermittent with field selectable 80dB or 100dB sound output at 1 meter.

MODERN DESIGN

Our clear lenses are available with five LED color options. The bold illumination of the colored LEDs eliminates the need for colored lenses.

FIND IT FAST

World Tower Lights

- Certifications
- Specifications
- Dimension Drawings
- Installation Instructions
- Easy to Buy

www.c3controls.com

IT'S EASY TO BUILD YOUR OWN TOWER LIGHT

Simply pick the code number from each of the sections below and combine them to build your part number.

World Tower Lights

WTL – 50 _____ – _____ _____ _____ _____ _____ _____

I II III IV V VI* VII* VIII* IX**

Example: To build one of our most popular Tower Lights, the part number would be WTL + 50 + III + IV + V + VI + VII + VIII + IX or WTL-50P1-DDGDADR

*NOTE: Light and Sound Modules will be assembled vertically starting at the base. Sound Modules must be stacked in the last position and only one is allowed per assembly.

I. OPERATOR TYPE

CODE	DESCRIPTION	LIST
WTL	World Tower Light	$ 8.00

II. MODULE DIAMETER

CODE	DESCRIPTION
50	50mm (1-31/32")

III. BASE MATERIAL & STYLE

CODE	DESCRIPTION	LIST
P1	Polycarbonate Short Base	$ 48.50
P2	Polycarbonate Tall Base	$ 48.50
P3	Direct-Mount Base	$ 48.50

IV. VOLTAGE CODE

CODE	DESCRIPTION
MC	24V AC/DC
D	120V 60Hz / 110V 50Hz
F	240V 60Hz / 220V 50Hz

DISCOUNT SCHEDULE **E**

V. POSITION 1

CODE	DESCRIPTION	LIST
DA	Amber LED Light Module & Lens - Cont.	$ 48.50
FA	Amber LED Light Module & Lens - Flashing	$ 61.00
RA	Amber LED Light Module & Lens - Rotary	$ 61.00
DB	Blue LED Light Module & Lens - Cont.	$ 48.50
FB	Blue LED Light Module & Lens - Flashing	$ 61.00
RB	Blue LED Light Module & Lens - Rotary	$ 61.00
DG	Green LED Light Module & Lens - Cont.	$ 48.50
FG	Green LED Light Module & Lens - Flashing	$ 61.00
RG	Green LED Light Module & Lens - Rotary	$ 61.00
DR	Red LED Light Module & Lens - Cont.	$ 48.50
FR	Red LED Light Module & Lens - Flashing	$ 61.00
RR	Red LED Light Module & Lens - Rotary	$ 61.00
DW	White LED Light Module with Clear Lens - Cont.	$ 48.50
FW	White LED Light Module with Clear Lens - Flashing	$ 61.00
RW	White LED Light Module with Clear Lens - Rotary	$ 61.00
DS3	Sound Module - Continuous (80dB or 100dB Field Selectable*)	$ 94.50
FS3	Sound Module - Intermittent (80dB or 100dB Field Selectable*)	$ 94.50
DCA	Amber LED Light Module with Clear Lens - Cont.	$ 48.50
FCA	Amber LED Light Module with Clear Lens - Flashing	$ 61.00
RCA	Amber LED Light Module with Clear Lens - Rotary	$ 61.00
DCB	Blue LED Light Module with Clear Lens - Cont.	$ 48.50
FCB	Blue LED Light Module with Clear Lens - Flashing	$ 61.00
RCB	Blue LED Light Module with Clear Lens - Rotary	$ 61.00
DCG	Green LED Light Module with Clear Lens - Cont.	$ 48.50
FCG	Green LED Light Module with Clear Lens - Flashing	$ 61.00
RCG	Green LED Light Module with Clear Lens - Rotary	$ 61.00
DCR	Red LED Light Module with Clear Lens - Cont.	$ 48.50
FCR	Red LED Light Module with Clear Lens - Flashing	$ 61.00
RCR	Red LED Light Module with Clear Lens - Rotary	$ 61.00

*NOTE: Sound module must be stacked in the last position and only one is allowed per assembly.

VI. POSITION 2

CODE	DESCRIPTION	LIST
(Blank)	None	—
DA	Amber LED Light Module & Lens - Cont.	$ 48.50
FA	Amber LED Light Module & Lens - Flashing	$ 61.00
RA	Amber LED Light Module & Lens - Rotary	$ 61.00
DB	Blue LED Light Module & Lens - Cont.	$ 48.50
FB	Blue LED Light Module & Lens - Flashing	$ 61.00
RB	Blue LED Light Module & Lens - Rotary	$ 61.00
DG	Green LED Light Module & Lens - Cont.	$ 48.50
FG	Green LED Light Module & Lens - Flashing	$ 61.00
RG	Green LED Light Module & Lens - Rotary	$ 61.00
DR	Red LED Light Module & Lens - Cont.	$ 48.50
FR	Red LED Light Module & Lens - Flashing	$ 61.00
RR	Red LED Light Module & Lens - Rotary	$ 61.00
DW	White LED Light Module with Clear Lens - Cont.	$ 48.50
FW	White LED Light Module with Clear Lens - Flashing	$ 61.00
RW	White LED Light Module with Clear Lens - Rotary	$ 61.00
DS3	Sound Module - Continuous (80dB or 100dB Field Selectable*)	$ 94.50
FS3	Sound Module - Intermittent (80dB or 100dB Field Selectable*)	$ 94.50
DCA	Amber LED Light Module with Clear Lens - Cont.	$ 48.50
FCA	Amber LED Light Module with Clear Lens - Flashing	$ 61.00
RCA	Amber LED Light Module with Clear Lens - Rotary	$ 61.00
DCB	Blue LED Light Module with Clear Lens - Cont.	$ 48.50
FCB	Blue LED Light Module with Clear Lens - Flashing	$ 61.00
RCB	Blue LED Light Module with Clear Lens - Rotary	$ 61.00
DCG	Green LED Light Module with Clear Lens - Cont.	$ 48.50
FCG	Green LED Light Module with Clear Lens - Flashing	$ 61.00
RCG	Green LED Light Module with Clear Lens - Rotary	$ 61.00
DCR	Red LED Light Module with Clear Lens - Cont.	$ 48.50
FCR	Red LED Light Module with Clear Lens - Flashing	$ 61.00
RCR	Red LED Light Module with Clear Lens - Rotary	$ 61.00

*NOTE: Sound module must be stacked in the last position and only one is allowed per assembly.

VII. POSITION 3

(USE CHART VI FROM ABOVE)

VIII. POSITION 4

(USE CHART VI FROM ABOVE)

IX. POSITION 5

(USE CHART VI FROM ABOVE)

Mix and Match Any Color Light Module and Sound Module

World Tower Lights

c3controls World Tower Lights with super bright integrated LEDs are a reliable source for all your signaling needs. Available in 24V AC/DC, 120V AC, and 240V AC. Five (5) color lenses and LEDs are available with three styles of module illumination; continuous, flashing, and rotary. Continuous and intermittent sound modules available in 80dB or 100dB output. All c3controls 50mm diameter Tower Lights are UL Listed and are rated Type 4/4X as standard for watertight and corrosion resistance. In addition, tower light assemblies are also listed for Type 1, 2, 3, 3R, 12 and 13, and IP65 for ingress protection.

UNIQUE PRODUCT FEATURES

Integrated Tower Lights for Easy Assembly and Maintenance

1. Stackable design to allow up to five modules in a single assembly.
2. Heavy duty polycarbonate construction for excellent durability, impact resistance, superior corrosion resistance, moisture rejection and electrical insulation.
3. Rugged polycarbonate lenses provide better visibility and can resist high impact for reliable performance in most environments, even in high ambient temperatures.
4. Easy maintenance and assembly—simply line up the module marking and arrow and turn; 25° clockwise to tighten and 25° counter clockwise to loosen.
5. Continuous, flashing and rotary integrated LED light modules available—low power consumption for energy savings.
6. The tower light features a flashing mode with a cycle of 0.7 seconds ON and 0.7 seconds OFF, providing a consistent and clear visual signal at approximately 43 flashes per minute.
7. Available continuous or intermittent sound modules with 80dB or 100dB output.
8. Each module features a watertight seal that meets Type 4/4X standards.
9. Wiring is made simple with our integrated heavy-duty polycarbonate bases, available in 3 heights: direct-mount, short base and tall base. The short and tall bases may be used with the vertical mount base for more mounting options. No complicated center post required for construction—just wire to the terminals.
10. Mounts to panel utilizing a four hole mounting pattern [38mm (1-1/2")].
11. Rated Type 1, 2, 3, 3R, 4/4X, 12 and 13, and IP65 for ingress protection.

Some of Our Popular Configurations:

WORLD TOWER LIGHTS

CATALOG NUMBER	DESCRIPTION	LIST
WTL-50P1-DDGDADR	World Tower Light, 50mm Diameter, Short Base, 120V AC, Green Cont./Amber Cont./Red Cont.	$202.00
WTL-50P1-MCDGDADR	World Tower Light, 50mm Diameter, Short Base, 24V AC/DC, Green Cont./Amber Cont./Red Cont.	$202.00
WTL-50P2-DDGDR	World Tower Light, 50mm Diameter, Tall Base, 120V AC, Green Cont./Red Cont.	$153.50
WTL-50P1-DDGFRDS3	World Tower Light, 50mm Diameter, Short Base, 120V AC, Green Cont./Red Flashing/Sound Module Cont. Field Selectable 80dB or 100dB	$260.50
WTL-50P3-DCDGCFRDS3	World Tower Light, 50mm Diameter, Direct-Mount Base, 120V AC, Clear Lens Green Cont./ Clear Lens Red Flashing, Sound Module Cont. Selectable 80dB or 100dB	$260.50

LED LIGHT MODULES

Our integrated LED light modules space saving design allows you to stack up to five (5) modules in a single assembly. Low energy consumption LED lamps last 100,000 hours – that's 11.4 years! High quality Lexan™ platic lenses with matching integrated LEDs available in five colors to provide better visibility and resist high impact for reliable performance.

Light Modules

WTL – 50 LM ____ ____ ____
I II III IV V VI

I. OPERATOR TYPE

CODE	DESCRIPTION
WTL	World Tower Light

II. MODULE DIAMETER

CODE	DESCRIPTION
50	50mm (1-31/32")

III. MODULE TYPE

CODE	DESCRIPTION	LIST
LM	Light Module	$48.50

IV. VOLTAGE

CODE	DESCRIPTION
MC	24V AC/DC
D	120V 60Hz / 110V 50Hz
F	240V 60Hz / 220V 50Hz

V. LIGHT MODULE FUNCTION

CODE	DESCRIPTION	LIST
D	Continuous	—
F	Flashing	$12.50
R	Rotary	$12.50

VI. LED LIGHT MODULE COLOR

CODE	DESCRIPTION
LA	Amber Lens / Amber LED
LB	Blue Lens / Blue LED
LG	Green Lens / Green LED
LR	Red Lens / Red LED
LW	Clear Lens / White LED
CLA	Clear Lens / Amber LED
CLB	Clear Lens / Blue LED
CLG	Clear Lens / Green LED
CLR	Clear Lens / Red LED

SOUND MODULES

Our low power consumption sound modules are available in continuous or intermittent with 80dB or 100dB output. Rugged polycarbonate housing resists high impact for reliable performance in most environments, even in high temperature ambients. NOTE: Sound module must be stacked in the last position of a tower light assembly.

Sound Modules

WTL – 50 SM3 ____ ____
I II III IV V

I. OPERATOR TYPE

CODE	DESCRIPTION
WTL	World Tower Light

II. MODULE DIAMETER

CODE	DESCRIPTION
50	50mm (1-31/32")

III. MODULE TYPE

CODE	DESCRIPTION	LIST
SM3	Sound Module, 80dB or 100dB	$94.50

IV. VOLTAGE CODE

CODE	DESCRIPTION
MC	24V AC/DC
D	120V 60Hz / 110V 50Hz
F	240V 60Hz / 220V 50Hz

V. SOUND MODULE FUNCTION

CODE	DESCRIPTION
D	Continuous
F	Intermittent

DISCOUNT SCHEDULE E

POLYCARBONATE BASES

Polycarbonate mounting bases are available in three versions: 50mm direct mount eliminates the need for drilling and reduces installation and our 50mm short and 50mm tall bases secure to the panel utilizing a 4-hole mounting pattern. UL Listed and are rated Type 1, 2, 3, 3R, 4/4X, 12, 13, and IP65 for the most demanding industrial environments.

BASES

CODE	STYLE	DIMENSIONS	LIST
WTL-50BP1	Panel-Mount	Height: Short 78mm (3-5/64") Dia.: 50mm (1-31/32")	$48.50
WTL-50BP2	Panel-Mount	Height: Tall 139mm (5-15/32") Dia.: 50mm (1-31/32")	$48.50
WTL-50BP3	Direct-Mount	Height: 57.9mm (2-9/32") Dia.: 50mm (1-31/32")	$48.50

DISCOUNT SCHEDULE E

VERTICAL MOUNTING BASE

NOTE: For use with Short and Tall bases, WTL-50BP1 and WTL-50BP2.

CODE	DESCRIPTION	LIST
WTL-50BPV	Vertical Mounting Base Accessory	$26.00

LIGHT MODULE CAP

NOTE: For use with Short and Tall bases, WTL-50BP1 and WTL-50BP2.

CODE	DESCRIPTION	LIST
WTL-50CAP	Light Module Cap Accessory	$ 2.80

Specifications:

WORLD TOWER LIGHTS

ELECTRICAL RATINGS

MODULE TYPE	RATED VOLTS	COLOR	LUMENS (mcd)	SOUND OUTPUT (dB)	FLASHING RATE (FPM)	DESIGN LIFE (Hrs.)	CURRENT DRAW (mA)	LAMP TYPE	SHOCK & VIBRTION
Light Module (Continuous Type)	24V AC/DC†	Amber	150 ~ 650	NA	NA	100,000	40 ~ 60	LED	Excellent
		Blue	600 ~ 1500						
		Green	660 ~ 1150						
		Red	400 ~ 800						
		White	850 ~ 1400						
Light Module (Flashing Type)	24V AC/DC†	Amber	150 ~ 650	NA	≈ 43 flashes/min	100,000	60 ~ 80	LED	Excellent
		Blue	600 ~ 1500						
		Green	660 ~ 1150						
		Red	400 ~ 800						
		White	850 ~ 1400						
Light Module (Rotary Type)	24V AC/DC†	Amber	150 ~ 650	NA	NA	100,000	40 ~ 50	LED	Excellent
		Blue	600 ~ 1500						
		Green	660 ~ 1150						
		Red	400 ~ 800						
		White	850 ~ 1400						
Light Module (Continuous Type)	120V AC†	Amber	150 ~ 650	NA	NA	100,000	14 ~ 20	LED	Excellent
		Blue	600 ~ 1500						
		Green	660 ~ 1150						
		Red	400 ~ 800						
		White	850 ~ 1400						
Light Module (Flashing Type)	120V AC†	Amber	150 ~ 650	NA	≈ 43 flashes/min	100,000	10 ~ 20	LED	Excellent
		Blue	600 ~ 1500						
		Green	660 ~ 1150						
		Red	400 ~ 800						
		White	850 ~ 1400						
Light Module (Rotary Type)	120V AC†	Amber	150 ~ 650	NA	NA	100,000	5 ~ 20	LED	Excellent
		Blue	600 ~ 1500						
		Green	660 ~ 1150						
		Red	400 ~ 800						
		White	850 ~ 1400						
Light Module (Continuous Type)	240V AC†	Amber	150 ~ 650	NA	NA	100,000	14 ~ 20	LED	Excellent
		Blue	600 ~ 1500						
		Green	660 ~ 1150						
		Red	400 ~ 800						
		White	850 ~ 1400						
Light Module (Flashing Type)	240V AC†	Amber	150 ~ 650	NA	≈ 43 flashes/min	100,000	5 ~ 20	LED	Excellent
		Blue	600 ~ 1500						
		Green	660 ~ 1150						
		Red	400 ~ 800						
		White	850 ~ 1400						
Light Module (Rotary Type)	240V AC†	Amber	150 ~ 650	NA	NA	100,000	5 ~ 20	LED	Excellent
		Blue	600 ~ 1500						
		Green	660 ~ 1150						
		Red	400 ~ 800						
		White	850 ~ 1400						
Sound Module	24V AC/DC	Grey	NA	80 ~ 100	NA	100,000	5 ~ 20	NA	Excellent
	120V 60Hz / 110V 50Hz								
	240V 60Hz / 220V 50Hz								

† LED voltage tolerance is +/- 10%

ENVIRONMENTAL RATINGS

Type 1, 2, 3, 3R, 4/4X, 12 and 13

IP65 (As per IEC 60529)

Operating Temperature
-30 to +60° C
(-22 to +140° F)

Storage Temperature
-30 to +70° C
(-22 to +158° F)

TERMINAL CONSTRUCTION

Wire Size: 0.3255 ~ 1.2 mm² (AWG 22 ~ 16)
(Copper only – stranded)
Only one wire permitted per termination

Recommended Torque:
0.5 ~ 0.9 Nm
(5 ~ 8 lb-in)

MATERIALS

RoHS Compliance
For RoHS Compliance documentation by product, refer to www.c3controls.com

50MM DIAMETER TOWER LIGHT ASSEMBLY WITH DIRECT MOUNT BASE

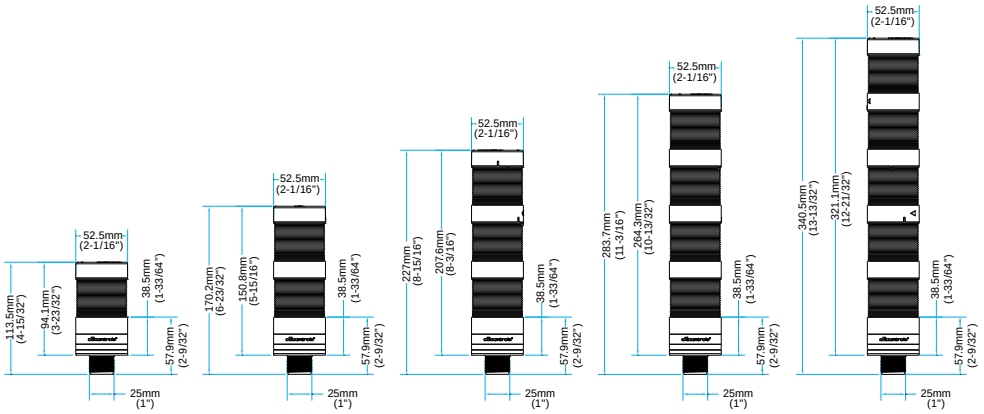

50MM DIAMETER TOWER LIGHT ASSEMBLY WITH SHORT PLASTIC BASE

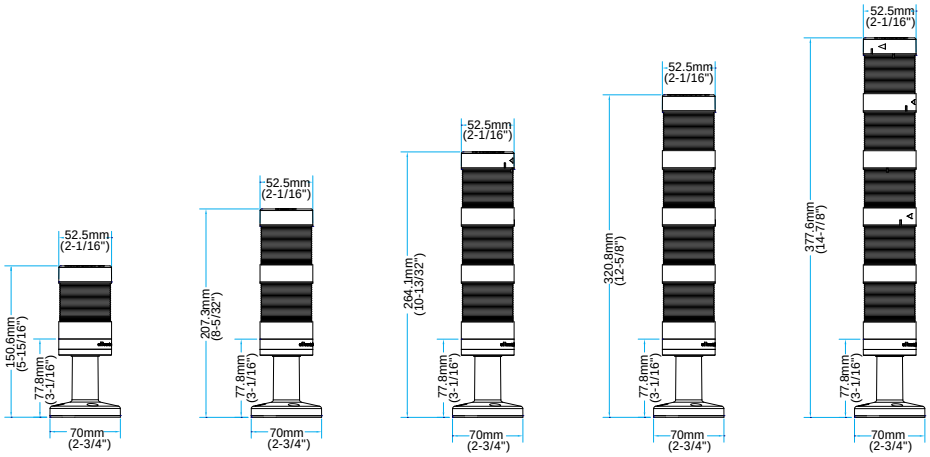

50MM DIAMETER TOWER LIGHT ASSEMBLY WITH TALL PLASTIC BASE

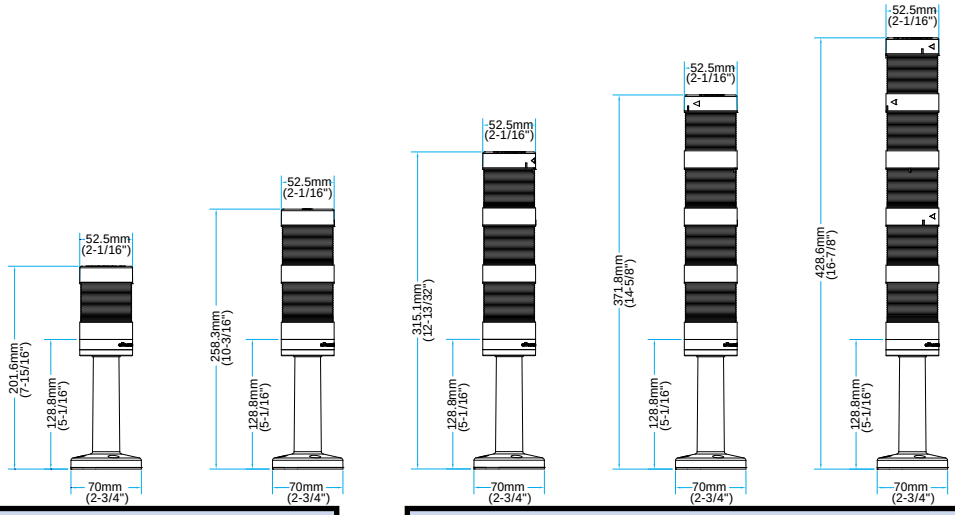

VERTICAL MOUNTING BASE

FRONT VIEW

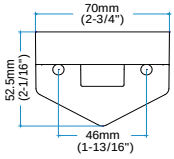

SIDE VIEW

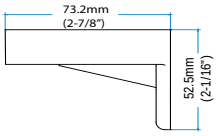

MOUNTING PATTERNS

SHORT AND TALL BASE

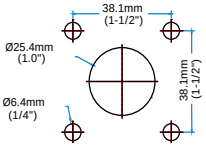

DIRECT BASE

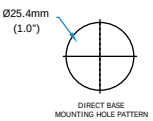

VERTICAL MOUNT BASE

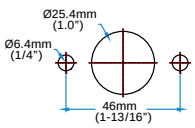

CAM SWITCHES

series CS

Looking for cam-operated rotary switches for On/Off, Changeover, Ammeter, Voltmeter and Motor-Reversing control and load break applications? c3controls has a full line of reliable switches featuring modular operating handles that can be mixed-and-matched with any switch. A very broad product offering that is easy to install.

Section 17

On-Off Switches	4
Changeover Switches	6
Ammeter & Voltmeter Switches	7
Motor Reversing Switches	8
Legend Plates	9
Specifications	11
Operator Plate Markings & Connecting Diagrams	13
Dimensions	14

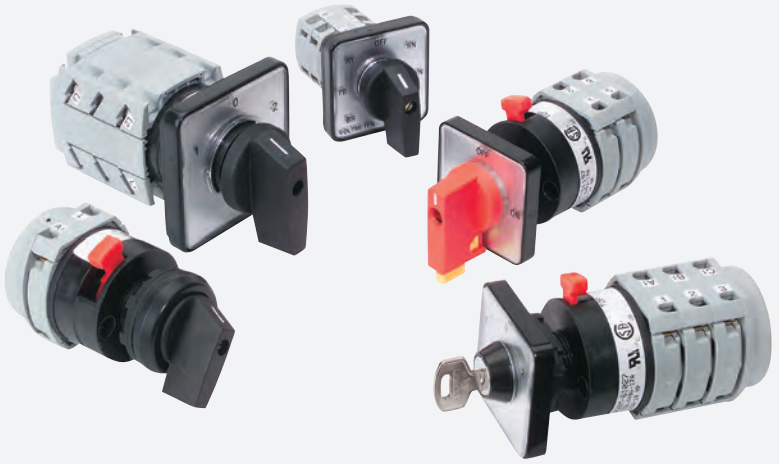

PROVEN

Conformity to Standards:
UL 508
CSA C22.2 No. 14
IEC 60947-1, 60947-3, 60947-5-1

Certifications:
UL File #: E187641 (Guide NLRV, NLRV7)

CE Marked (per EU Low Voltage Directive 2006/95/EC and RoHS Directive 2011/65/EU)

Visit www.c3controls.com to download product certifications.

NOTE: The scope (range, description, price, specifications, dimensions, etc.) of the product featured in this section is subject to change without notice. Refer to www.c3controls.com for product updates.

CAM SWITCHES

c3controls offers a comprehensive line of Cam Switches, just one example of our superior products designed and manufactured to meet the needs of the machine builder. Check out all the features of our Series CS below!

ENGINEERED TO PERFORM AND SAVE VALUABLE INSTALLATION TIME.	
✓ **Proven**	Our cam switch operators meet UL, CSA, and IEC standards requirements making them suitable for use in global applications.
✓ **Simple Customization**	Round operator without front plate is available for use with standard and custom legend plates for simple and convenient customization.
✓ **Fast Wiring**	Combination head terminal screws which include captive terminal clamps and our clearly marked terminals make wiring fast and easy.
✓ **Multiple Variations**	Available in 45°, 60°, and 90° switching angles, and up to 6 positions for multiple variations.
✓ **Variety of Applications**	Rated from 10A to 32A up to 690V AC with various operator types, including key lock, lever, and lockable lever for use in all your applications.
✓ **Heavy-Duty**	High-grade engineering plastics like nylon, celcon, and glass filled polyamide provide outstanding mechanical strength and electrical insulating properties.
✓ **Clear Markings**	Markings are integral to the front plate and protected so they won't wear off over time.
✓ **Visible Certifications**	Our product certifications and electrical ratings are clearly marked on the outside of the operators for easy reference during installation.
✓ **Convenient**	Cam switches offer the convenience of a single part number, making it easy to find what you need.
✓ **Advanced Safety**	Switches are available with IP20 guarded terminals to protect against accidental contact with live parts.
✓ **36-Month Warranty***	Every product is backed by our 36-Month Warranty—giving you confidence in the quality, reliability, and performance of components designed for the most demanding applications.
✓ **Guaranteed Same-Day Shipping***	Product availability reduces inventory, and improves cash-flow—saving you money. With c3controls any order for standard catalog items received by 6:00pm ET is guaranteed to ship same-day.
✓ **Advantage Pricing**	Our approach to product development, manufacturing, and focus on servicing the OEM and Electrical Equipment Builder reduces cost. The result—the best value in the industry.

*See c3controls Terms & Conditions

> *"We at Mahlkuch Electric have used c3controls since 2006 and c3controls products haven't let us down yet. We get great customer support, product delivered when we need them, and all for a fair price. Plus, because we've never had an in-field failure with their products, we never have to worry about middle of the night service calls. Thanks for helping this contractor sleep a little easier at night."*

Jeff Mahlkuch, Owner • **Mahlkuch Electric, LLC**

On-Off

Changeover

Ammeter/Voltmeter

Motor Reversing

UNIQUE PRODUCT LINE FEATURES

REDUCED INVENTORY

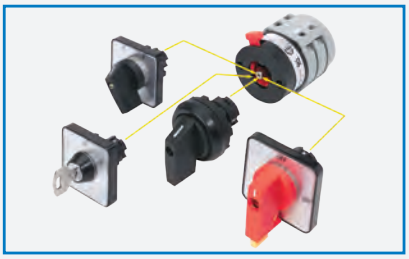

A wide variety of operators can be "mixed-and-matched" with different switch types to reduce inventory requirements and customize the switch appearance.

EASY INSTALLATION

Operators mount in a standard 22.5mm hole. The latching mechanism allows the switch to be easily wired outside the control panel and then securely installed on the mounted operator.

PADLOCKABLE SWITCH

Operators can be locked OFF with a padlock or key switch to prevent unauthorized operation of switch.

MANUAL MOTOR CONTROLLERS

Certified as Manual Motor Controllers per UL standards requirements.

FIND IT FAST

CAM Switches

- Certifications
- Specifications
- Dimension Drawings
- Installation Instructions
- Easy to Buy

www.c3controls.com

IT'S EASY TO BUILD YOUR OWN CAM SWITCH

Simply pick the code number from each of the sections below and combine them to build your part number.

On-Off Cam Switches

CS ____ – ____ – ____ ____ ____ ____

/ II III IV V VI VII

Example: To build one of our most popular Cam Switches, the part number would be CS + II + III + IV + V + VI + VII or CS11003-G16-L22LBAA61

I. BASIC CAM SWITCH

CODE	DESCRIPTION
CS	Cam Switch

SEE PAGES 11 & 12 FOR SPECIFICATIONS, PAGE 13 FOR OPERATOR PLATE MARKINGS AND CONNECTING DIAGRAMS, AND PAGE 14 FOR DIMENSIONS.

II. SWITCH CONFIGURATION / III. CURRENT RATING

CODE	DESCRIPTION	NO. OF STAGES	G16 16 AMP IP20 TERMINALS	G25 25 AMP IP20 TERMINALS	G32 32 AMP IP20 TERMINALS
	MAINTAINED 60° (A61)				
11001	1 Pole	1	$ 28.00	$ 38.00	$ 46.00
11002	2 Poles	1	$ 31.00	$ 42.00	$ 52.00
11003	3 Poles	2	$ 41.00	$ 56.00	$ 68.00
11004	4 Poles	2	$ 45.00	$ 61.00	$ 73.00
11005	5 Poles	3	$ 55.00	$ 76.00	$ 90.00
11006	6 Poles	3	$ 58.00	$ 80.00	$ 95.00
	MAINTAINED 90° (A91/B93)				
11191	1 Pole	1	$ 28.00	$ 38.00	$ 46.00
11192	2 Poles	1	$ 31.00	$ 42.00	$ 58.00
11199	3 Poles	2	$ 41.00	$ 56.00	$ 68.00
11194	4 Poles	2	$ 45.00	$ 61.00	$ 73.00
11906	6 Poles	3	$ 58.00	$ 80.00	$ 95.00

IV. INSTALLATION

CODE	DESCRIPTION	FOR CURRENT RATING CODES	LIST
L22	48mm x 48mm Front Plate	G16, G25, G32	$ 10.00
N22	Round Ring (no front plate) NOTE: See pages 9 & 10 for legend plate options.	G16, G25, G32	$ 8.90
P22	48mm x 48mm Front Plate – Lockable	G16, G25, G32	$ 11.50
K22	48mm x 48mm Front Plate – Key Lock NOTE: Available for any maintained 90° switch.	G16, G25, G32	$ 19.00

Unit mounts in a single 22.5mm (7/8") hole.

V. OPERATOR TYPE

CODE	DESCRIPTION
(Blank)	Key Lock (For use with K22 only)
L	Lever

VI. OPERATOR COLOR

CODE	OPERATOR COLOR	FRONT PLATE COLOR	FOR INSTALLATION CODE
RY	Red	Yellow	L22, P22
BB	Black	Black	L22
BG	Black	Grey	L22
BA	Black	Aluminum	L22, K22
BN	Black	—	N22
RN	Red	—	N22

VII. OPERATOR PLATE MARKING

CODE	DESCRIPTION	FOR INSTALLATION CODE
A61	OFF-ON (60°)	L22, P22
A91	OFF-ON (90°)	L22, P22
B93	OFF-ON, Key Removal in all Positions (90°)	K22
(Blank)	—	N22

DISCOUNT SCHEDULE G

SOME OF OUR POPULAR CONFIGURATIONS:

ON-OFF CAM SWITCHES

CATALOG NUMBER	DESCRIPTION	LIST
CS11192-G16-P22LRYA91	16A, 2 Pole, Maintained 90°, 48mm x 48mm Red/Yellow Lever "OFF-ON" Front Plate	$ 42.00
CS11002-G25-L22LBAA61	25A, 2 Pole, Maintained 60°, 48mm x 48mm Black/Aluminum Lever "OFF-ON" Front Plate	$ 52.00

SEE BOTTOM OF PAGE 5 FOR OPERATOR AND CAM SWITCH OPTIONS.

Cam Switches

c3controls compact, easy to install On-Off, Changeover, Ammeter, Voltmeter, and Motor Reversing Cam Switches are available with up to 6 positions and up to 6 poles — a solution for almost any control and load break switch application. They are certified as Manual Motor Controllers per UL standards. Our maintained operators share the same ratings with the addition of the 4/4X rating. All switches are suitable for global applications having met UL, CSA, and IEC standards. c3controls goes the extra step to make sure that our products outlast the competition.

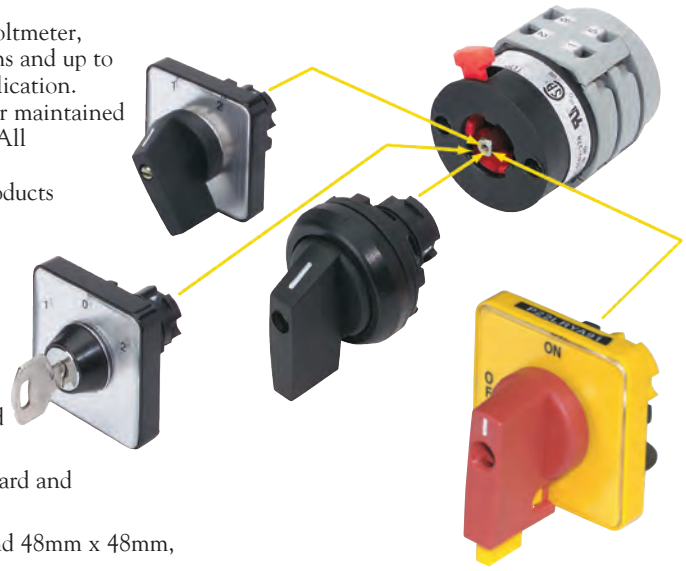

Product features include:

- Rated from 10A to 32A up to 690V AC.
- Available in 60° and 90° switching angles.
- Operators and switches conveniently install in a standard, round 22.5mm (7/8") mounting hole that is directly interchangeable with commonly available pilot devices and other control and load break switches.
- Round operator without front plate is available for use with standard and custom legend plates.
- Front plates are available in two different sizes; 32mm x 32mm and 48mm x 48mm, and come in yellow, grey, black or aluminum.

UNIQUE PRODUCT FEATURES

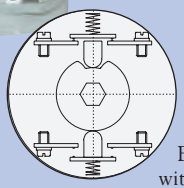

Cam design provides "Quick-Make — Slow Break" operation with built-in latching. Two double-break, positive drive to open silver alloy contacts per stage provide long electrical life.

1. High-grade engineering plastics like nylon, celcon, and glass filled polyamide provide outstanding mechanical strength and long life with excellent electrical insulating properties.
2. The simple latching mechanism securely assembles the switch with the operator — the switch can be easily and conveniently wired outside the confined space of the control panel, and then installed on the operator that has already been mounted.
3. A wide variety of operators can be "mixed-and-matched" with different switch types to reduce inventory requirements and customize the switch appearance for every application.
4. Operators can be locked OFF with a padlock or key switch to prevent operation of the switch.
5. Markings are integral to the front plate and protected so they won't wear off over time.
6. IP20 guarded terminals to protect against accidental contact with live parts.
7. Combination head terminal screws include captive terminal clamps for ease of wiring.
8. Clearly marked terminals make wiring fast and easy.

Mix and Match Any Operator and Cam Switch

S22
Lever

S22
Lever

L22
Lever

N22
Round Ring

P22
Lockable

K22
Key Lock

IT'S EASY TO BUILD YOUR OWN CAM SWITCH

Simply pick the code number from each of the sections below and combine them to build your part number.

Changeover Cam Switches

CS ____ – ____ – ____ ____ ____ ____

I II III IV V VI VII

Example: To build one of our most popular Cam Switches, the part number would be CS + II + III + IV + V + VI + VII or CS21027-G16-K22BAC62

I. BASIC CAM SWITCH

CODE	DESCRIPTION
CS	Cam Switch

SEE PAGES 11 & 12 FOR SPECIFICATIONS, PAGE 13 FOR OPERATOR PLATE MARKINGS AND CONNECTING DIAGRAMS, AND PAGE 14 FOR DIMENSIONS.

II. SWITCH CONFIGURATION / III. CURRENT RATING

CODE	DESCRIPTION	NO. OF STAGES	G16 16 AMP IP20 TERMINALS	G25 25 AMP IP20 TERMINALS	G32 32 AMP IP20 TERMINALS
	WITH OFF POSITION, MAINTAINED 60° (B61, C62)				
21025	1 Pole	1	$ 29.00	$ 39.00	$ 47.00
21026	2 Poles	2	$ 41.00	$ 56.00	$ 67.00
21027	3 Poles	3	$ 53.00	$ 73.00	$ 87.00
21028	4 Poles	4	$ 66.00	$ 91.00	$107.00
21029	5 Poles	5	$ 78.00	$108.00	$127.00
21030	6 Poles	6	$ 90.00	$125.00	$146.00

IV. INSTALLATION

CODE	DESCRIPTION	FOR CURRENT RATING CODES	LIST
L22	48mm x 48mm Front Plate	G16, G25, G32	$ 10.00
N22	Round Ring (no front plate) NOTE: See pages 9 & 10 for legend plate options.	G16, G25, G32	$ 8.90
K22	48mm x 48mm Front Plate – Key Lock	G16, G25, G32	$ 19.00

Unit mounts in a single 22.5mm (7/8") hole.

DISCOUNT SCHEDULE G

V. OPERATOR TYPE

CODE	DESCRIPTION
(Blank)	Key Lock (For use with K22 only)
L	Lever

VI. OPERATOR COLOR

CODE	OPERATOR COLOR	FRONT PLATE COLOR	FOR INSTALLATION CODE
RY	Red	Yellow	L22
BB	Black	Black	L22
BG	Black	Grey	L22
BA	Black	Aluminum	L22, K22
BN	Black	—	N22
RN	Red	—	N22

VII. OPERATOR PLATE MARKING

CODE	DESCRIPTION	FOR INSTALLATION CODE
B61	1-0-2 (60°)	L22
C62	1-0-2, Key Removal in OFF Position (60°)	K22
(Blank)	—	N22

SOME OF OUR POPULAR CONFIGURATIONS:

CHANGEOVER CAM SWITCHES

CATALOG NUMBER	DESCRIPTION	LIST
CS21028-G16-L22LBGB61	16A, 4 Pole, Maintained 60°, 48mm x 48mm Black/Grey Lever "1-0-2" Front Plate	$ 76.00
CS21026-G25-L22LRYB61	25A, 2 Pole, Maintained 60°, 48mm x 48mm Red/Yellow Lever "1-0-2" Front Plate	$ 66.00

SEE BOTTOM OF PAGE 5 FOR OPERATOR AND CAM SWITCH OPTIONS.

IT'S EASY TO BUILD YOUR OWN CAM SWITCH

Simply pick the code number from each of the sections below and combine them to build your part number.

Ammeter and Voltmeter Cam Switches

CS ____ – ____ – ____ L ____ ____
I II III IV V VI VII

Example: To build one of our most popular Cam Switches, the part number would be CS + II + III + IV + L + VI + VII or CS41313-G16-L22LBAZ4313

SEE PAGES 11 & 12 FOR SPECIFICATIONS, PAGE 13 FOR OPERATOR PLATE MARKINGS AND CONNECTING DIAGRAMS, AND PAGE 14 FOR DIMENSIONS.

I. BASIC CAM SWITCH

CODE	DESCRIPTION
CS	Cam Switch

II. SWITCH CONFIGURATION / III. CURRENT RATING

CODE	DESCRIPTION	NO. OF STAGES	G10 10 AMP IP20 TERMINALS	G16 16 AMP IP20 TERMINALS
	VOLTMETER WITH OFF POSITION			
41312	3-Phase Line to Line	2	$ 32.00	$ 50.00
41313	3-Phase Line to Line and Line to Neutral	3	$ 48.00	$ 65.00
	AMMETER WITH OFF POSITION			
42325	1 Pole – 3 Transformer	3	$ 48.00	—

IV. INSTALLATION

CODE	DESCRIPTION	FOR CURRENT RATING CODES	LIST
S22	32mm x 32mm Front Plate	G10	$ 8.60
L22	48mm x 48mm Front Plate	G16	$ 10.00
N22	Round Ring (no front plate) NOTE: See pages 9 & 10 for legend plate options.	G16	$ 8.90

Unit mounts in a single 22.5mm (7/8") hole.

DISCOUNT SCHEDULE G

V. OPERATOR TYPE

CODE	DESCRIPTION
L	Lever

VI. OPERATOR COLOR

CODE	OPERATOR COLOR	FRONT PLATE COLOR	FOR INSTALLATION CODE
BB	Black	Black	S22, L22
BG	Black	Grey	S22, L22
BA	Black	Aluminum	S22, L22
BN	Black	—	N22

VII. OPERATOR PLATE MARKING

CODE	DESCRIPTION	FOR USE WITH SWITCH CODE	FOR INSTALLATION CODE
	VOLTMETER		
Z9312	OFF-RY-YB-BR (90°)	41312	S22, L22
Z4313	OFF-RN-YN-BN-BR-YB-RY (45°)	41313	S22, L22
(Blank)	—	—	N22
	AMMETER		
Z9325	OFF-R-Y-B (90°)	42325	S22

SOME OF OUR POPULAR CONFIGURATIONS:

AMMETER AND VOLTMETER CAM SWITCHES

CATALOG NUMBER	DESCRIPTION	LIST
CS42325-G10-S22LBGZ9325	10A, 1 Pole – 3 Transformer Ammeter Switch, 32mm x 32mm Black/Grey Lever "OFF-R-Y-B" Front Plate	$ 56.60
CS41313-G16-L22LBAZ4313	16A, 3 Phase Line to Line and Line to Neutral Voltmeter Switch, 48mm x 48mm Black/Aluminum Lever "OFF-RN-YN-BN-BR-YB-RY" Front Plate	$ 75.00

SEE BOTTOM OF PAGE 5 FOR OPERATOR AND CAM SWITCH OPTIONS.

IT'S EASY TO BUILD YOUR OWN CAM SWITCH

Simply pick the code number from each of the sections below and combine them to build your part number.

Motor Reversing Cam Switches

CS ____ – ____ – ____ L ____ ____
I *II* *III* *IV* *V* *VI* *VII*

Example: To build one of our most popular Cam Switches, the part number would be CS + II + III + IV + L + VI + VII or CS51211-G25-L22LBAB61

I. BASIC CAM SWITCH

CODE	DESCRIPTION
CS	Cam Switch

SEE PAGES 11 & 12 FOR SPECIFICATIONS, PAGE 13 FOR OPERATOR PLATE MARKINGS AND CONNECTING DIAGRAMS, AND PAGE 14 FOR DIMENSIONS.

V. OPERATOR TYPE

CODE	DESCRIPTION
L	Lever

II. SWITCH CONFIGURATION / III. CURRENT RATING

CODE			G16	G25	G32
	DESCRIPTION	NO. OF STAGES	16 AMP IP20 TERMINALS	25 AMP IP20 TERMINALS	32 AMP IP20 TERMINALS
51210	Motor Reversing, 2 Poles	2	$ 50.00	$ 68.00	$ 82.00
51211	Motor Reversing, 3 Poles	3	$ 65.00	$ 90.00	$106.00

VI. OPERATOR COLOR

CODE	OPERATOR COLOR	FRONT PLATE COLOR	FOR INSTALLATION CODE
RY	Red	Yellow	L22
BB	Black	Black	L22
BG	Black	Grey	L22
BA	Black	Aluminum	L22
BN	Black	—	N22
RN	Red	—	N22

IV. INSTALLATION

CODE	DESCRIPTION	FOR CURRENT RATING CODES	LIST
L22	48mm x 48mm Front Plate	G16, G25, G32	$ 10.00
N22	Round Ring (no front plate) NOTE: See pages 9 & 10 for legend plate options.	G16, G25, G32	$ 8.90

Unit mounts in a single 22.5mm (7/8") hole.

DISCOUNT SCHEDULE G

VII. OPERATOR PLATE MARKING

CODE	DESCRIPTION	FOR INSTALLATION CODE
B61	1-0-2 (60°)	L22
(Blank)	—	N22

SOME OF OUR POPULAR CONFIGURATIONS:

MOTOR REVERSING CAM SWITCHES

CATALOG NUMBER	DESCRIPTION	LIST
CS51211-G16-L22LBAB61	16A, 3 Poles, 48mm x 48mm Black/Aluminum Lever "1-0-2" Front Plate	$ 75.00
CS51210-G25-N22LRN	25A, 2 Poles, No Front Plate, Red Round Ring Lever	$ 76.90
CS51211-G32-L22LBAB61	32A, 3 Poles, 48mm x 48mm Black/Aluminum Lever "1-0-2" Front Plate	$116.00

SEE BOTTOM OF PAGE 5 FOR OPERATOR AND CAM SWITCH OPTIONS.

IT'S EASY TO BUILD YOUR OWN LEGEND PLATE

Simply pick the code number from each of the sections below and combine them to build your part number.

Legend Plates (for N22 Round Ring Operators Only)

_____ _____ – _____ – _____

I II III IV

All legend plates are a 2-ply laminated plastic, laser engraved for a permanent and quality appearance. Uppercase is standard unless specified.

I. LEGEND PLATE TYPE

CODE	DESCRIPTION	LIST
CSLP	Standard 1-3/4"h x 1-3/4"w	$ 4.00
CSLPT	Tall 2"h x 1-3/4"w	$ 5.00
CSLPJ	Jumbo 2"h x 2"w	$ 5.00
CSLPR	Standard Round 2-25/64" Dia.	$ 9.00
CSLPRM	Medium Round 2-3/4" Dia.	$11.00
CSLPRJ	Jumbo Round 3-3/4" Dia.	$12.00

Legend plates feature up to 2 lines of text with approximately 16 characters per line.

II. FACE AND LETTER COLOR

CODE	FACE COLOR	LETTER COLOR
AL	Aluminum	Black
(Blank)	Black	White
BE	Blue	White
GN	Green	White
RD	Red	White
WE	White	Black
YW	Yellow	Black

III. LEGEND DESIGNATION

CODE	LEGEND LEFT	LEGEND CENTER	LEGEND RIGHT
00	(Blank)	(Blank)	(Blank)
81	FWD	AUTO	REV
89	OFF	RUN	START
85	OFF	START	RUN
86	OFF	1	2
88	1	2	3

IV. ADHESIVE BACK

CODE	DESCRIPTION
(Blank)	No Adhesive Back
A	Adhesive Back

NOT FINDING WHAT YOU NEED IN A STANDARD PLATE?

We offer Special and Custom Engraving up to 304.8mm x 609.6mm (12" x 24"). Consult factory or see page 10 for details.

While our standard legend plates are available for same day shipping, our special and custom legend plates are not.

Legend plates for use with N22 Round Ring Operators.

DISCOUNT SCHEDULE E

SOME OF OUR POPULAR CONFIGURATIONS:

LEGEND PLATES

CATALOG NO.	DESIGNATION	LIST
CSLPAL-88	1 2 3	$ 4.00
CSLPAL-89	OFF RUN START	$ 4.00
CSLPAL-86	OFF 1 2	$ 4.00

N22 OPERATOR W/CSLP LEGEND PLATE

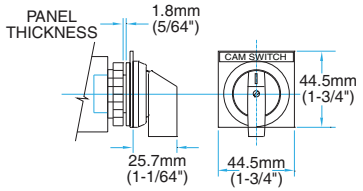

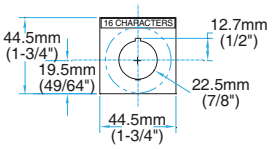

STANDARD LEGEND PLATE WITH KEYWAY

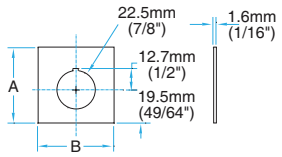

CSLP STANDARD

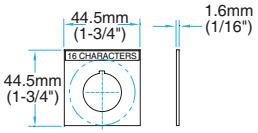

CSLPT TALL

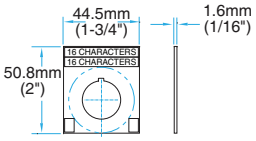

CSLPJ JUMBO

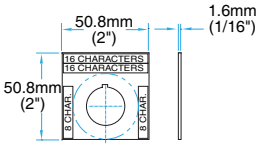

CSLPR STANDARD ROUND

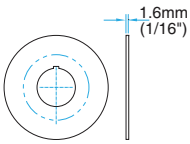

CSLPRM MEDIUM ROUND

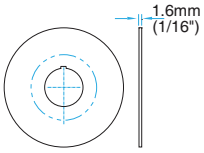

CSLPRJ JUMBO ROUND

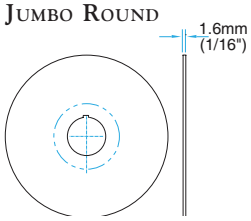

IT'S EASY TO BUILD YOUR OWN LEGEND PLATE

Simply pick the code number from each of the sections below and combine them to build your part number.

Special Legend Plates (for N22 Round Ring Operators Only)

I	II	– SP – III	IV

All legend plates are a 2-ply laminated plastic, laser engraved for a permanent and quality appearance. Uppercase is standard unless specified.

I. LEGEND PLATE TYPE

CODE	DESCRIPTION	LIST
CSLP	Standard 1-3/4"h x 1-3/4"w	$ 4.00
CSLPT	Tall 2"h x 1-3/4"w	$ 5.00
CSLPJ	Jumbo 2"h x 2"w	$ 5.00
CSLPR	Standard Round 2-25/64" Dia.	$ 9.00
CSLPRM	Medium Round 2-3/4" Dia.	$11.00
CSLPRJ	Jumbo Round 3-3/4" Dia.	$12.00

Legend Plates feature up to 2 lines of text with approximately 16 characters per line.

II. FACE AND LETTER COLOR

CODE	FACE COLOR	LETTER COLOR
AL	Aluminum	Black
(Blank)	Black	White
BE	Blue	White
GN	Green	White
RD	Red	White
WE	White	Black
YW	Yellow	Black

III. LEGEND DESIGNATION

CODE	DESCRIPTION	LIST
SP	Special Legend	$14.00

IV. ADHESIVE BACK

CODE	DESCRIPTION
(Blank)	No Adhesive Back
A	Adhesive Back

DISCOUNT SCHEDULE E

Upon receipt of your order, legend plates will be set-up as specified and a proof will be sent to you prior to production to ensure accuracy.

To order, submit your drawing to:

Mail: c3controls
Attn: Customer First
PO Box 496
Beaver, PA 15009

Fax: 724.775.5283

Email: legendplates@c3controls.com

To help simplify your order process, templates are available by calling our factory at 724.775.7926 or reference one of the drawings shown on page 9.

Special legend plates are not available for same day shipping.

(Sample custom plate)

Custom Legend Plates

- ***Add your Corporate Logo!*** Send us your corporate logo electronically to promote your company image in a clean professional legend plate.
- Available in 2-ply 304.8mm x 609.6mm (12" x 24") sheets of laminated plastic for custom laser engraving.
- To order, specify part number CSLP-CP (no adhesive back) or CSLP-CP-A (adhesive back).
- Initial Set-Up Fee Per Legend Plate: $50/hour (minimum fee $50.00).
- $2.00/Square Inch (minimum $18.00).
- Design services available. Consult factory for details and hourly rate.
- Custom legend plates are not available for same-day shipping.

To order, submit your drawing to:

Mail: c3controls
Attn: Customer First
PO Box 496
Beaver, PA 15009

Fax: 724.775.5283

Email: legendplates@c3controls.com

Specifications:

ELECTRICAL SPECIFICATIONS					
		SWITCH CURRENT RATING CODE			
		G10	G16	G25	G32
ELECTRICAL					
	UNITS				
UL APPLICATIONS					
Rated Operating Voltage, Ue	VAC	460	600	600	600
Rated Operating Current, Ie	A	10	15	20	30
Rated Three Phase Power, Pe					
@ 240V AC	HP	1	2	5	5
@ 480V AC	HP	2	3	10	10
@ 600V AC	HP	—	5	15	15
Rated Single Phase Power, Pe					
@ 120V AC	HP	1/3	1/3	1	1
@ 240V AC	HP	3/4	1	3	3
Short Circuit Ratings					
With Class J and CC Fuses	kA	1	5	5	5
Maximum Fuse Size	A	10	25	50	50
With Class RK5 Fuses	kA	1	5	5	5
Maximum Fuse Size	A	10	25	50	50
Electrical Endurance at Max. Ie	Ops.	10,000	10,000	10,000	10,000
Maximum Operating Rate	Ops./Hr.	120	120	120	120
IEC APPLICATIONS					
Rated Insulation Voltage, Ui	VAC	440	690	690	690
Rated Isolation Voltage, Uiso	VAC	250	415	415	415
Rated Impulse Voltage, Uimp	kV	4	6	6	6
Rated Operating Voltage, Ue	VAC	440	690	690	690
Rated Uninterrupted Current, Ith	A	12	20	32	40
Rated Operating Current, Ie					
AC-21A	A	10	16	25	32
Rated Three Phase Power, AC-23A, Pe					
@ 220 ~ 240V AC	kW	1.8	3	5.5	7.5
@ 380 ~ 440V AC	kW	3	7.5	11	15
@ 500 ~ 690V AC	kW	—	7.5	11	15
Rated Three Phase Power, AC-3, Pe					
@ 220 ~ 240V AC	kW	1.5	2.2	4	5.5
@ 380 ~ 440V AC	kW	3	5.5	7.5	11
@ 500 ~ 690V AC	kW	—	5.5	7.5	11
Short Circuit Ratings					
With Type gG/gM Fuses	kA	3	5	10	10
Maximum Fuse Size	A	10	16	25	32

MECHANICAL, ENVIRONMENTAL AND CONSTRUCTION SPECIFICATIONS					
		SWITCH CURRENT RATING CODE			
		G10	G16	G25	G32
MECHANICAL					
	UNITS				
Mechanical Endurance	Ops.	100,000			
Maximum Operating Rate	Ops./Hr.	300			
ENVIRONMENTAL					
Ambient Operating Temperature	°C / °F	-25 to +55 / -13 to +131			
Altitude	m/ft.	2,000/6,562			
Ingress Protection					
Switch Type					
Code G		IP20			
Operators	—				
Maintained		Type 1, 3, 3R, 4/4X, 12 and IP65			
Spring Return		Type 1, 3, 3R, 12, and IP65			
CONSTRUCTION					
Conductor Size					
UL	AWG	18 ~ 16	16 ~ 12	16 ~ 12	14 ~ 10
Solid/Multi-Strand	mm^2	0.7 ~ 1.5	1.5 ~ 4	1.5 ~ 4	2.5 ~ 6
Fine Strand with Sleeve	mm^2	0.7 ~ 1.5	1 ~ 2.5	1 ~ 2.5	1.5 ~ 4
Terminal Torque	Nm	0.5 ~ 0.8	0.8 ~ 1.1	1.1 ~ 1.4	1.1 ~ 1.4
	Lb-in.	5 ~ 7	7 ~ 10	10 ~ 12	10 ~ 12
ROHS COMPLIANCE		For RoHS compliance documentation by product, refer to www.c3controls.com			

ON-OFF CAM SWITCHES

Operator Plate Markings

Code A61

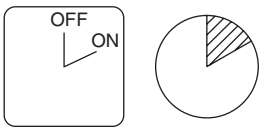

Codes A91 & B93

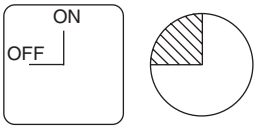

Connecting Diagrams

Maintained 60°, 90°

Codes CS11***

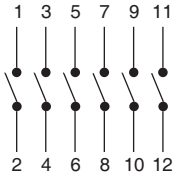

1 to 6 Poles

NOTE: ***Represents the Switch Configuration Code. Refer to page 4.

CHANGEOVER CAM SWITCHES

Operator Plate Markings

Codes B61 & C62

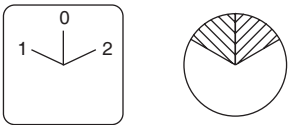

Connecting Diagrams

Maintained 60°

Codes CS21***

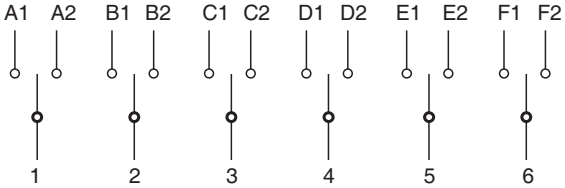

1 to 6 Poles

NOTE: ***Represents the Switch Configuration Code. Refer to page 6.

AMMETER AND VOLTMETER CAM SWITCHES

Operator Plate Markings

Code Z9312

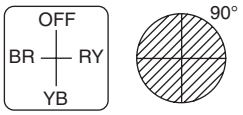

Code Z4313

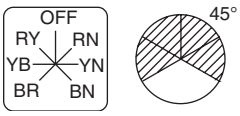

Code Z9325

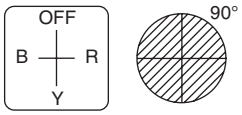

Connecting Diagrams

Voltmeter

Code 41312

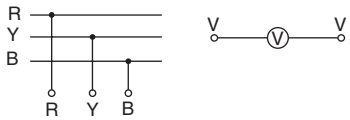

Code 41313

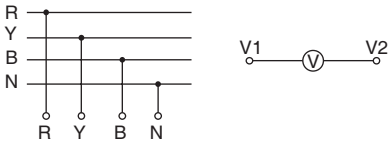

Ammeter

Code 42325

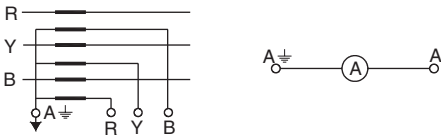

MOTOR REVERSING CAM SWITCHES

Operator Plate Markings

Code B61

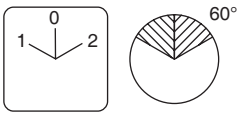

Connecting Diagrams

Code 51210

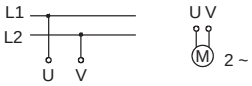

Code 51211

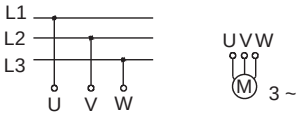

NOTE:

- U & V are switching
- Position 1 = Reversing and Position 2 = Forward (refers to operator plate markings)

CAM SWITCH & FRONT PLATE INSTALLATION DIMENSIONS

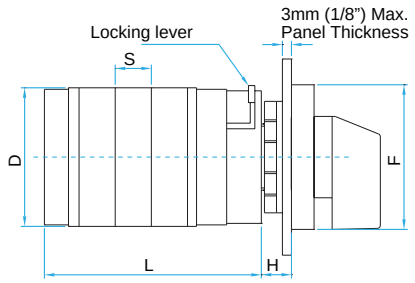

Length (L) = No of Stages x S + W

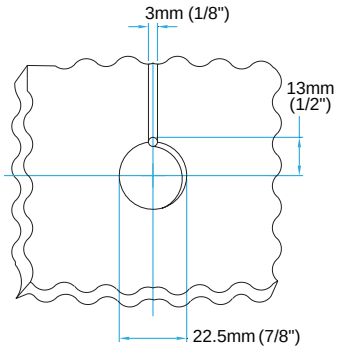

Drilling Plan

SWITCH & FRONT PLATE INSTALLATION DIMENSIONS

CURRENT RATING CODE	INSTALLATION CODE	S	D	F	H	W
G10	S22	9.5mm (3/8")	33mm (1-19/64")	32mm (1-17/64")	13mm (33/64")	28.5mm (1-1/8")
G16	N22, L22, P22, K22	12mm (15/32")	46mm (1-13/16")	48mm (1-57/64")	15mm (19/32")	37mm (1-15/32")
G25	N22, L22, P22, K22	15mm (19/32")	50mm (1-31/32")	48mm (1-57/64")	15mm (19/32")	37mm (1-15/32")
G32	N22, L22, P22, K22	15mm (19/32")	50mm (1-31/32")	48mm (1-57/64")	15mm (19/32")	37mm (1-15/32")

Length = (No. of Stages) x S + W

OPERATOR DIMENSIONS

S22
LEVER

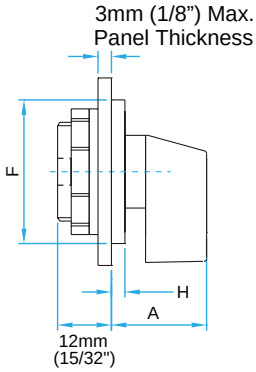

L22
LEVER

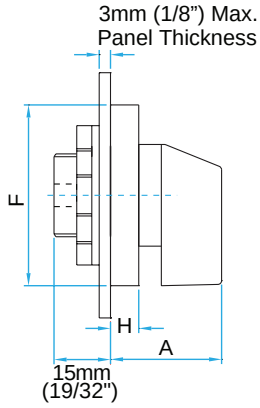

P22
LOCKABLE

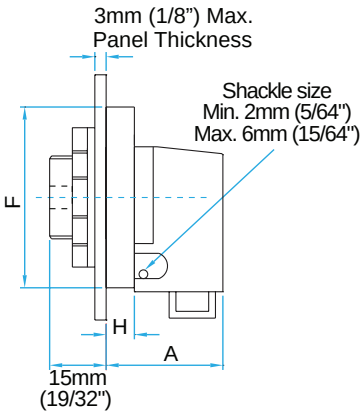

K22
KEY LOCK

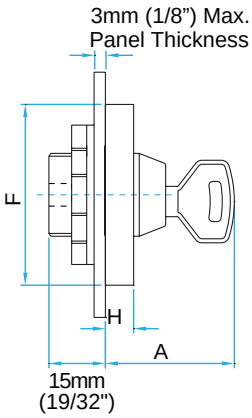

N22
ROUND RING

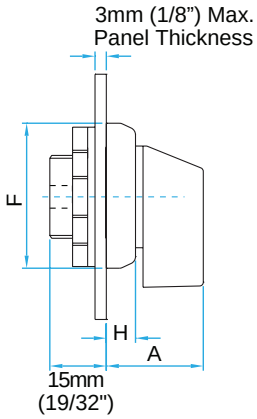

OPERATOR DIMENSIONS

INSTALLATION CODE	H	A	F
S22	3.0mm (1/8")	22.0mm (7/8")	32mm (1-17/64")
L22	7.5mm (19/64")	29.5mm (1-5/32")	48mm (1-57/64")
P22	7.5mm (19/64")	31.7mm (1-1/4")	48mm (1-57/64")
K22	7.5mm (19/64")	34.2mm (1-23/64")	48mm (1-57/64")
N22	7.8mm (5/16")	25.8mm (1-1/16")	38.5mm (1-33/64")

22MM NEMA PILOT DEVICES

c3controls' durable line of 22mm NEMA devices are for all those tight fitting places. Our non-illuminated momentary and maintained push buttons, pilot lights and selector switches are compact and ready for field wiring in almost any environment. This is the most rugged 22mm pilot device product line in the world!

Section 18

Push Buttons	4
Pilot Lights	10
Selector Switches	12
Potentiometers	14
Accessories	15
Legend Plates	17
Specifications	19
Dimensions	21

PROVEN

Conformity to Standards:
UL 508
CSA C22.2 No. 14
IEC 60947-1, 60947-5-1

Certifications:
UL File #: E68568 (Guide NKCR, NKCR7)
CSA File #: LR47446-1
CE Marked (per EU Low Voltage Directive 2006/95/EC and RoHS Directive 2011/65/EU)

Visit www.c3controls.com to download product certifications.

NOTE: The scope (range, description, price, specifications, dimensions, etc.) of the product featured in this section is subject to change without notice. Refer to www.c3controls.com for product updates.

22MM NEMA PILOT DEVICES

Every c3controls product is designed and manufactured to meet the needs of the machine builder, including our comprehensive line of 22mm NEMA Pilot Devices. Check out all the features of our Series 22 NEMA below!

DELIVERING THE MOST RUGGED 22MM NEMA DEVICES IN THE INDUSTRY.	
✓ **Proven**	Our 22mm NEMA operators are UL Listed, CSA Certified and CE marked meeting global standards requirements.
✓ **Simple Customization**	Our light modules come with various lens color options for appropriate operator interface and LED lamps with leakage protection.
✓ **Rugged Design**	Optional polyester or aluminum clamps rings with coarse 16 pitch threads for quick and easy utilization that won't cross thread or strip.
✓ **Visible Certifications**	Our product certifications and electrical ratings are clearly marked on the outside of the contact blocks for easy reference during installation.
✓ **Heavy Duty**	Polyester construction provides superior durability, corrosion resistance, moisture rejection and electrical insulation.
✓ **Flexible**	Our "Add-On" Contact Blocks can be added to the basic operator to increase the number and type of contacts. Up to 3 blocks with 2 circuits each may be added, giving a total of 8 contacts per operator.
✓ **Convenient**	Reduce inventory with our interchangeable modular design, providing endless options for appropriate operator interface.
✓ **Environmentally Secure**	With 4/4X and IP65 ratings, our 22mm line of Pilot Devices are built to last and withstand dust, corrosion, ice, and rain.
✓ **36-Month Warranty***	Every product is backed by our 36-Month Warranty—giving you confidence in the quality, reliability, and performance of components designed for the most demanding applications.
✓ **Guaranteed Same-Day Shipping***	Product availability reduces inventory, and improves cash-flow—saving you money. With c3controls any order for standard catalog items received by 6:00pm ET is guaranteed to ship same-day.
✓ **Advantage Pricing**	Our approach to product development, manufacturing, and focus on servicing the OEM and Electrical Equipment Builder reduces cost. The result—the best value in the industry.

*See c3controls Terms & Conditions

> *Our circulation equipment is exposed to elements ranging from extreme heat and humidity, to rain, to freezing snow and ice. Therefore we chose c3controls to provide durable, reliable NEMA 4X switches for our machines.*
>
> Jon Zent, Mechanical Engineer • **SolarBee, Inc.**

Momentary Push Button

Emergency Stop

Illuminated Push Button

Pilot Light

Selector Switch

UNIQUE PRODUCT LINE FEATURES

COMPACT DESIGN

Our compact, thin pilot devices are designed with up to two integral circuits. Additional contact blocks are available.

METAL ON THE INSIDE

c3controls Maintained Push Buttons contain a solid brass detent mechanism ensuring reliable operation in emergency stop applications, and providing safe interruption of circuits and longer life.

ONE CAM DESIGN

Our single cam design eliminates the need for multiple cam and selector switch configurations, reducing inventory and saves you labor time and costs.

INTERNAL SELF-LUBRICANT & U-CUP SEAL

All frictional parts are molded with an internal self-lubricant to provide outstanding wear without troublesome greases used by others.

Our revolutionary U-Cup seal is infused with a Teflon coating to eliminate cracking when exposed to harsh conditions and keeps water, oils, and dust away from the contact blocks.

ASME A17.1 COMPLIANT

Our Emergency Stop Button meets ASME A17.1 standards for safety and functionality in elevator car and pit applications, and features a permanently marked STOP and indication of both STOP and RUN positions.

RUBBER BOOTS

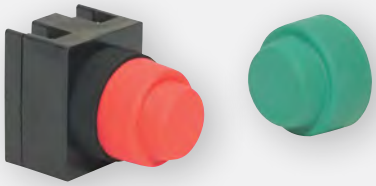

Our state-of-the-art rubber boots protect both the operators and the circuits behind them from harsh chemicals and climates. They feature a built-in clamp ring that is molded with Neoprene and has been modified to provide added pliability and protection against dust, freezing and thawing environments.

FIND IT FAST

22mm NEMA Pilot Devices

- Certifications
- Specifications
- Dimension Drawings
- Installation Instructions
- Easy to Buy

www.c3controls.com

IT'S EASY TO BUILD YOUR OWN PUSH BUTTON

Simply pick the code number from each of the sections below and combine them to build your part number.

Momentary Push Buttons (Non-Illuminated)

22PB _____ – _____ _____ _____
I *II* *III* *IV* *V*

Example: To build one of our most popular Push Buttons, the part number would be 22PB + II + III + IV + V or 22PBNO-XXGN

I. OPERATOR TYPE

CODE	DESCRIPTION	LIST
22PB	Push Button Operator	$23.00

II. CONTACT BLOCK CONFIGURATION

CODE	DESCRIPTION	LIST
NO	1 Normally Open Contact Block	—
NC	1 Normally Closed Contact Block	—
NONC	Contact Block w/1 Normally Open and 1 Normally Closed	$11.00
2NO	Contact Block w/2 Normally Open	$11.00

III. CLAMP RING

CODE	DESCRIPTION	LIST
	FOR USE WITH ALL CAP TYPES (EXCLUDES RUBBER BOOTS)	
X	Polyester (Type 4X)	—
M	Aluminum (Type 4)	$ 3.90
	FOR USE WITH RUBBER BOOTS	
(Blank)	Clamp Ring Included*	—

*NOTE: Rubber boots come standard with a built-in clamp ring and thrust washer. When installing operator we recommend that the thrust washer be placed behind the panel to prevent rotation.

IV. CAP TYPE

CODE	DESCRIPTION	LIST
(Blank)	Operator less Cap	—
F	Flush	$ 5.80
X	Extended	$ 5.80
M	Mushroom (1-5/32" Dia.)	$16.00
S1	Shrouded Mushroom (1" Dia.)‡ NOTE: Only available with a Polyester Clamp Ring.	$ 9.70
XRB	Neoprene Rubber Boot *	$18.00

*NOTE: Rubber boots come standard with a built-in clamp ring and thrust washer. When installing operator we recommend that the thrust washer be placed behind the panel to prevent rotation.

Our 22mm Momentary Push Buttons come with integral contacts ready for field wiring.

‡NOTE: Products marked with ‡ are not available for same-day shipping. Contact our Customer First Team for lead times and minimum order quantities.

V. CAP COLOR

CODE	COLOR
	ALL CAP TYPES (EXCLUDES RUBBER BOOTS)
(Blank)	Operator less Cap
BK	Black
BE	Blue‡
GN	Green
RD	Red
WE	White‡
YW	Yellow‡
	RUBBER BOOTS
BK	Black
GN	Green
RD	Red

Contact Blocks are available to add to basic operators to increase the number and type of contacts. Up to three blocks with two circuits each may be added giving a total of eight contacts per operator. Blocks simply screw on the back of the operator. Refer to page 15 for details.

DISCOUNT SCHEDULE **E**

***LEGEND PLATES** in almost any size & color are available for same day shipping. See pages 17 & 18 for complete selection.*

Mix and Match Any Color and Momentary Non-Illuminated Push Button Cap

Flush Cap

Extended Cap

Mushroom Cap (1-5/32" (29.5mm) dia.)

Rubber Boot

22mm NEMA Momentary Non-Illuminated Push Buttons

c3controls goes the extra step to make sure that our products outlast the competition. Our 22mm NEMA Momentary Non-Illuminated Push Buttons are durable and flexible for a variety of uses. All c3controls 22mm NEMA operators are UL Listed and are rated Type 4/4X as standard for watertight and corrosion resistance. In addition, operators are also listed for Type 1, 2, 3, 3R, 12 and 13, and meet global standards requirements.

Product features include:

- Polyester construction for superior corrosion resistance, moisture rejection and electrical insulation.
- Octagonal polyester or polished aluminum clamp rings.
- #6 terminal screws with self-lifting captive wire clamps accommodate #22 through two #12 AWG wires (0.5 - 4mm^2) per terminal.
- Operators conveniently mount in a round 7/8" (22.5mm) hole that is directly interchangeable with competitors units and eliminates the labor required for notching.
- A600 (7,200 VA Make and 720 VA Break), 600V AC Maximum, Maximum Continuous Thermal Current, Ith: 10A
- P300 (138 VA Make and 138 VA Break), 250V DC Maximum, Maximum Continuous Thermal Current, Ith: 5A

UNIQUE PRODUCT FEATURES

1. Compact, thin design comes with integral circuits for field wiring.
2. Our push buttons modular design provides endless options for appropriate operator interface by alternating cap types and colors which ultimately will save you time and money by reducing your inventory.
3. Our revolutionary U-Cup seal is infused with a Teflon coating to eliminate cracking when exposed to harsh conditions such as heat, dryness and sunlight. The U-Cup seal rides easily along the stroker and keeps water, oils, dust and other corrosive particles in the air away from the contact blocks. This U-cup seal also acts like a squeegee and forms a permanent watertight seal that meets Type 4/4X with or without a rubber boot.

Some of Our Popular Configurations:

MOMENTARY NON-ILLUMINATED PUSH BUTTON OPERATORS WITH POLYESTER CLAMP RING (TYPE 4X)

		FLUSH CAP		EXTENDED CAP		MUSHROOM CAP	
	CAP COLOR	CATALOG NUMBER	LIST	CATALOG NUMBER	LIST	CATALOG NUMBER	LIST
1NO	Black	22PBNO-XFBK	$28.80	22PBNO-XXBK	$28.80	22PBNO-XMBK	$39.00
	Green	22PBNO-XFGN	$28.80	22PBNO-XXGN	$28.80	22PBNO-XMGN	$39.00
	Red	22PBNO-XFRD	$28.80	22PBNO-XXRD	$28.80	22PBNO-XMRD	$39.00
1NC	Black	22PBNC-XFBK	$28.80	22PBNC-XXBK	$28.80	22PBNC-XMBK	$39.00
	Green	22PBNC-XFGN	$28.80	22PBNC-XXGN	$28.80	22PBNC-XMGN	$39.00
	Red	22PBNC-XFRD	$28.80	22PBNC-XXRD	$28.80	22PBNC-XMRD	$39.00
1 NO	Green	22PBNONC-XFGN	$39.80	22PBNONC-XXGN	$39.80	22PBNONC-XMGN	$50.00
& 1 NC	Red	22PBNONC-XFRD	$39.80	22PBNONC-XXRD	$39.80	22PBNONC-XMRD	$50.00

IT'S EASY TO BUILD YOUR OWN PUSH BUTTON

Simply pick the code number from each of the sections below and combine them to build your part number.

Maintained Push Buttons (Non-Illuminated)
2-Position Push-Pull

22PP _____ – _____ **PM RD** – _____
I *II* *III* *IV* *V* *VI*

Example: To build one of our most popular Push Buttons, the part number would be **22PP + II + III + PM + RD + VI** or **22PPNC-XPMRD**

I. OPERATOR TYPE

CODE	DESCRIPTION	LIST
22PP	Push-Pull Maintained	$48.00

II. CONTACT BLOCK CONFIGURATION

CODE	DESCRIPTION	LIST
NO	1 Normally Open Contact Block	—
NC	1 Normally Closed Contact Block	—
NONC	Contact Block w/1 Normally Open and 1 Normally Closed	$11.00
2NC	Contact Block w/2 Normally Closed	$11.00

III. CLAMP RING

CODE	DESCRIPTION	LIST
X	Polyester (Type 4X)	—
M	Aluminum (Type 4)	$ 3.90

IV. CAP TYPE

CODE	DESCRIPTION	LIST
PM	Push-Pull Maintained Mushroom	$16.00

V. CAP COLOR

CODE	COLOR
RD	Red

VI. CAP MARKING

CODE	DESCRIPTION	LIST
Blank	no markings	—
67	PUSH TO STOP, PULL TO RUN	$16.00

DISCOUNT SCHEDULE **E**

Our 22mm Maintained operators come with integral contacts ready for field wiring and are maintained in both the push and pull positions. The primary application is "push" to "stop" and "pull" to "start". Our push-pull operators are often used as maintained emergency stop buttons.

***LEGEND PLATES** in almost any size & color are available for same day shipping. See pages 17 & 18 for complete selection.*

Some of Our Popular Configurations:

2-POSITION PUSH-PULL MAINTAINED NON-ILLUMINATED OPERATORS WITH POLYESTER CLAMP RING (TYPE 4X)

CATALOG NUMBER	DESCRIPTION	LIST
22PPNC-XPMRD	Push-Pull Maintained Red Mushroom Cap w/1 Normally Closed Contact Block	$64.00
22PP2NC-XPMRD	Push-Pull Maintained Red Mushroom Cap with a 2 Normally Closed Contact Block	$75.00

Available Cap Colors And Markings

22mm NEMA Maintained Non-Illuminated Push Buttons

Our 22mm NEMA line of Maintained Non-Illuminated Push Buttons feature a compact, thin design for tight fitting spaces and come with integral circuits for field wiring. Contact blocks are available to add to basic operators to increase the number and type of contacts. Up to three blocks deep with two circuits each may be added giving a total of eight contacts per operator. Blocks simply screw on the back of the operator. Refer to page 15 for add-on contact blocks.
All c3controls 22mm NEMA operators are UL Listed and are rated Type 4/4X as standard for watertight and corrosion resistance. In addition, operators are also listed for Type 1, 2, 3, 3R, 12 and 13,and meet global standards requirements.

Additionally, our permanently inscripted Push Buttons comply with ASME A17.1 standards, a critical requirement for the elevator industry, establishing the Emergency Stop Switch as a crucial safety device rather than merely an accessory. Adhering to ASME regulations, it features stamped Mushroom cap with "PUSH TO STOP PULL TO RUN" functionality to meet all safety protocols.

UNIQUE PRODUCT FEATURES

We Put The Metal On The Inside — Where It Counts!

c3controls Maintained Push Buttons contain a solid brass detent mechanism and are the best-engineered, most reliable heavy-duty Emergency Stop in the world. This rugged design, which is available with either polyester or aluminum clamp rings, ensures reliable operation in emergency applications, providing safe interruption of circuits, and much longer life when compared to any competitor's product.

ASME compliant Elevator Emergency Push Button

Designed to enhance safety and compliance, this advanced variation of our 22mm NEMA 2-Position Maintained Non-Illuminated Button features a permanently marked "PUSH TO STOP PULL TO RUN" red mushroom cap, adhering to ASME A17.1 - 2022 Section 3.10.4 (O). This section of the ASME Standard mandates a maintained open and close style emergency stop button with a red button or cap, clearly marked to indicate "STOP" and "RUN" positions.

Key features include:

- **Permanent Marking:** The red mushroom cap is clearly and permanently marked with "PUSH TO STOP PULL TO RUN".
- **Compliance:** Meets ASME A17.1 standards for safety and functionality in elevator car and pit applications with permanently marked "STOP" and indication of both "STOP" and "RUN" positions.
- **Audible Alarm Integration:** Easily connect / integrate to an audible alarm using convenient contact blocks, enhancing emergency alerts and ensuring immediate notification.

For those interested in customizing or permanently marking other devices, please contact your c3controls sales representative or our customer first team.

U-Cup Seal

Our revolutionary U-Cup seal is infused with a Teflon coating to eliminate cracking when exposed to harsh conditions such as heat, dryness and sunlight. The U-Cup seal rides easily along the stroker and keeps water, oils, dust and other corrosive particles in the air away from the contact blocks. This U-cup seal also acts like a squeegee and forms a permanent watertight seal that meets Type 4/4X.

IT'S EASY TO BUILD YOUR OWN PUSH BUTTON

Simply pick the code number from each of the sections below and combine them to build your part number.

Momentary Push Buttons (Illuminated)

22IPB				–				–	
I	II	III	IV		V	VI	VII		VIII

Example: To build one of our most popular Push Buttons, the part number would be 22IPB + II + III + IV + V + VI + VII + VIII or 22IPBF120LR-XIFCRD-NC

I. OPERATOR TYPE

CODE	DESCRIPTION	LIST
22IPB	Illuminated Push Button	$ 23.00

II. OPERATOR LIGHT UNIT BASE

CODE	DESCRIPTION	LIST
F	Full Voltage	$ 49.00

III. VOLTAGE

CODE	DESCRIPTION
12	12V AC/DC
24	24V AC/DC
120	120V AC/DC

IV. LED LAMP COLOR

CODE	DESCRIPTION	LIST
LA	Amber	$ 18.00
LB	Blue	$ 18.00
LG	Green	$ 18.00
LR	Red	$ 18.00
LW	White	$ 18.00
NL	**No Lamp**	– $ 1.80

V. CLAMP RING

CODE	DESCRIPTION	LIST
X	Polyester (Type 4X)	—
M	Aluminum (Type 4)	$ 3.90

VI. LENS TYPE

CODE	DESCRIPTION	LIST
IFC	Flush/Guarded	$ 10.00
IXC	Extended	$ 10.00

VII. LENS COLOR

CODE	COLOR
AR	Amber
BE	Blue
CR	Clear
GN	Green
RD	Red
WE	White

VIII. CONTACT BLOCK CONFIGURATION

CODE	DESCRIPTION	LIST
NO	1 Normally Open Contact Block	$ 13.00
NC	1 Normally Closed Contact Block	$ 13.00
NO-NC	1 Normally Open and 1 Normally Closed Contact Blocks	$ 26.00

22mm Illuminated Push Buttons accept standard 30mm contact blocks. These standard contact blocks feature convenient snap-on assembly and are stackable up to four deep. They are also color coded for easy circuit identification to minimize wiring errors and speed the wiring process. Please refer to Section 13 Pages 4 & 5.

DISCOUNT SCHEDULE **E**

SEE PAGE 19 FOR LAMP TECHNICAL DATA CHART.

***LEGEND PLATES** in almost any size & color are available for same day shipping. See pages 17 & 18 for complete selection.*

MIX AND MATCH ANY COLOR AND MOMENTARY ILLUMINATED PUSH BUTTON LENS

Flush/Guarded Lens

Extended Lens

22mm NEMA Momentary Illuminated Push Buttons

c3controls goes the extra step to make sure that our products outlast the competition. Our 22mm NEMA Momentary Illuminated Push Buttons are durable and flexible for a variety of uses. All c3controls 22mm NEMA operators are UL Listed and are rated Type 4/4X standard for watertight and corrosion resistance. In addition, operators are also listed for Type 1, 2, 3, 3R, 12 and 13, and meet global standards requirements.

Product features include:

- Polyester construction for superior corrosion resistance, moisture rejection and electrical insulation.
- Polyester or polished aluminum clamp rings.
- Full voltage lights incorporate a unique insulated socket design to minimize accidental contact during lamp change.
- All lights use miniature bayonet base lamps to provide reliable lamp secureness.
- Our LED lamps with leakage protection last 100,000 hours that's — 11.4 years!
- #6 terminal screws with self-lifting captive wire clamps accommodate #22 through two #12 AWG wires (0.5 - 4mm^2) per terminal.
- Operators conveniently mount in a round 7/8" (22.5mm) hole that is directly interchangeable with competitors units.

UNIQUE PRODUCT FEATURES

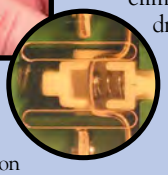

1. Vibration resistant snap-on assembly 30mm contact blocks simplify installation. See Section 13 Pages 4 & 5 for information on 30mm contact blocks.
2. Our revolutionary U-Cup seal is infused with a Teflon coating to eliminate cracking when exposed to harsh conditions such as heat, dryness and sunlight. The U-Cup seal rides easily along the stroker and keeps water, oils, dust and other corrosive particles in the air away from the contact blocks. This U-cup seal also acts like a squeegee and forms a permanent watertight seal that meets Type 4/4X standards.

NOTE: Gold plated contacts are available on standard 30mm blocks for dry circuit applications. See Section 13 Pages 4 & 5 for details.

Some of Our Popular Configurations:

MOMENTARY ILLUMINATED PUSH BUTTON OPERATORS WITH POLYESTER CLAMP RING (TYPE 4X)

		FLUSH/GUARDED LENS		EXTENDED LENS	
	CAP COLOR	CATALOG NUMBER	LIST	CATALOG NUMBER	LIST
Full Voltage	Amber	22IPBF120LA-XIFCAR-NO-NC	$126.00	22IPBF120LA-XIXCAR-NO-NC	$126.00
	Green	22IPBF120LG-XIFCGN-NO	$113.00	22IPBF120LG-XIXCGN-NO	$113.00
	Red	22IPBF120LR-XIFCRD-NC	$113.00	22IPBF120LR-XIXCRD-NC	$113.00

SNAP-ON ALTERNATE ACTION BLOCKS

provide "push-on/push-off" operation on our push buttons. See Section 13 Page 17.

IT'S EASY TO BUILD YOUR OWN PILOT LIGHT

Simply pick the code number from each of the sections below and combine them to build your part number.

Pilot Lights

I	II	III	– IV	PL V	VI

Example: To build one of our most popular Pilot Lights, the part number would be I + II + III + IV + PL + VI or 22FVL120LG-XPLGN

I. PILOT LIGHT OPERATOR

CODE	DESCRIPTION	LIST
22FVL	Full Voltage	$50.00
22RL	Resistor‡	$50.00

II. VOLTAGE

CODE	DESCRIPTION
	FULL VOLTAGE
12	12V AC/DC
24	24V AC/DC
120	120V AC/DC
	RESISTOR‡
120	120V AC/DC‡

III. LAMP TYPE/COLOR

CODE	COLOR	LIST
	LED	
LA	Amber	$18.00
LB	Blue	$18.00
LG	Green	$18.00
LR	Red	$18.00
LW	White	$18.00
NL	**No Lamp**	– $ 1.80
	INCANDESCENT‡	
I	Clear‡	—
	NEON‡	
NR	Red‡	—

IV. CLAMP RING

CODE	DESCRIPTION	LIST
X	Polyester (Type 4X)	—
M	Aluminum (Type 4)	$ 3.90

V. LENS TYPE

CODE	DESCRIPTION	LIST
PL	Pilot Light Lens	$ 7.00

VI. LENS COLOR

CODE	COLOR
AR	Amber
BE	Blue
CR	Clear‡
GN	Green
RD	Red
WE	White

‡NOTE: Products marked with ‡ are not available for same-day shipping. Contact our Customer First Team for lead times and minimum order quantities.

SEE PAGE 19 FOR LAMP TECHNICAL DATA CHART.

DISCOUNT SCHEDULE **E**

Some of Our Popular Configurations:

PILOT LIGHTS WITH POLYESTER CLAMP RING (TYPE 4X)

CATALOG NUMBER	DESCRIPTION	LIST
22FVL120LR-XPLRD	Full Voltage 120V Red LED w/Red Lens	$75.00
22FVL120LG-XPLGN	Full Voltage 120V Green LED w/Green Lens	$75.00
22FVL120LA-XPLAR	Full Voltage 120V Amber LED w/Amber Lens	$75.00

Available Lens Colors for Pilot Lights

22mm NEMA Pilot Lights

Our 22mm NEMA Pilot Lights and Illuminated Push-To-Test Pilot Lights, when utilized with our LED lamps, provide leakage protection, long-lasting life and high quality with tremendous resistance to shock and vibration. Our reflection technology and state-of-the-art LED lamps improve visibility from all angles. c3controls LED lamps last 100,000 hours — *that's 11.4 years!* Combine these LEDs with our full voltage or resistor packages for optimum durability. All c3controls 22mm NEMA operators are UL Listed and are rated Type 4/4X as standard for watertight and corrosion resistance. In addition, operators are also listed for Type 1, 2, 3, 3R, 12 and 13, and meet global standards requirements.

IT'S EASY TO BUILD YOUR OWN PILOT LIGHT

Simply pick the code number from each of the sections below and combine them to build your part number.

Push-To-Test Pilot Lights

I	II	III	IV		V	VI	VII
____	PTT	____	____	–	____	IFC	____

Example: To build one of our most popular Pilot Lights, the part number would be I + PTT + III + IV + V + IFC + VII or 22RPTT120LG-XIFCGN

NOTE: Our Push-To-Test Pilot Lights featured on this page are not available for same-day shipping. Contact our Customer First Team for lead times and minimum order quantities.

I. PUSH-TO-TEST OPERATOR LIGHT UNIT BASE

CODE	DESCRIPTION	LIST
22F	Full Voltage	$49.00
22R	Resistor	$49.00

II. OPERATOR TYPE

CODE	DESCRIPTION	LIST
PTT	Push-To-Test	$19.00

III. VOLTAGE BASED ON OPERATOR LIGHT UNIT BASE

CODE	DESCRIPTION
	FULL VOLTAGE
120	120V AC/DC
	RESISTOR
120	120V AC/DC

IV. LAMP TYPE/COLOR

CODE	COLOR	LIST
	LED	
LA	Amber	$18.00
LB	Blue	$18.00
LG	Green	$18.00
LR	Red	$18.00
LW	White	$18.00
NL	**No Lamp**	– $ 1.80

V. CLAMP RING

CODE	DESCRIPTION	LIST
X	Polyester (Type 4X)	—
M	Aluminum (Type 4)	$ 3.90

VI. LENS TYPE

CODE	DESCRIPTION	LIST
IFC	Flush/Guarded Lens	$10.00

VII. LENS COLOR

CODE	COLOR
AR	Amber
BE	Blue
GN	Green
RD	Red
WE	White

DISCOUNT SCHEDULE **E**

See page 19 for Lamp Technical Data Chart.

Our Push-To-Test Pilot Lights combine an illuminated push button with normally open and normally closed contact blocks factory wired for three-point wiring in standard push-to-test circuits.

Some of Our Popular Configurations:

PUSH-TO-TEST PILOT LIGHTS W/POLYESTER CLAMP RING (TYPE 4X)

CATALOG NUMBER	DESCRIPTION	LIST
22FPTT120LG-XIFCGN	Full Voltage 120V w/LED Lamp & Green Flush/Guarded Lens	$96.00
22RPTT120LR-XIFCRD	Resistor 120V w/Incand. Lamp and Red Flush/Guarded Lens	$96.00

Mix and Match Any Color and Push-To-Test Pilot Light Lens

Flush/Guarded Lens

IT'S EASY TO BUILD YOUR OWN SELECTOR SWITCH

Simply pick the code number from each of the sections below and combine them to build your part number.

Selector Switches

_____ _____ – _____ _____ _____ – _____

I *II** *III* *IV* *V* *VI*

Example: To build one of our most popular Selector Switches, the part number would be **I + II + III + IV + V** or **22SS3AC-XHBK**

*NOTE: Our 22mm Non-Illuminated Selector Switches come with two integral contacts in the operator base and are ready for field wiring.

I. OPERATOR FUNCTION

CODE	POSITION/FUNCTION	LIST
22SS2	2/Maintained	$19.00
22SRL	2/Spring Return, R to L	$25.00
22SS3	3/Maintained	$19.00
22SAC	3/Spring Return, L & R to C	$25.00
22SLC	3/Spring Return, L to C	$25.00
22SRC	3/Spring Return, R to C	$25.00

II. CIRCUIT DESIGNATION BASED ON OPERATOR FUNCTION

2-POSITION CONTACT BLOCK CIRCUIT DESIGNATION

	HANDLE POSITION			
CODE	LEFT	RIGHT	CONTACT BLOCK TYPE	LIST
G	X	0	22CBNC	$13.00
H	0	X	22CBNO	$13.00
GH	X 0	0 X	22CBNONC	$23.00
GG	X X	0 0	22CB2NC‡	$23.00
HH	0 0	X X	22CB2NO‡	$23.00

3-POSITION CONTACT BLOCK CIRCUIT DESIGNATION

	HANDLE POSITION				
CODE	LEFT	CENTER	RIGHT	CONTACT BLOCK TYPE	LIST
AB	X 0	0 X	0 0	22CBNONC	$23.00
AC	X 0	0 0	0 X	22CB2NO	$23.00
BC	0 0	X 0	0 X	22CBNCNO	$23.00
CD	0 0	0 X	X X	22CBNODB‡	$25.00
DF	0 X	X X	X 0	22CB2DB‡	$25.00

III. CLAMP RING

CODE	DESCRIPTION	LIST
X	Polyester (Type 4X)	—
M	Aluminum (Type 4)	$ 3.90

IV. HANDLE TYPE

CODE	DESCRIPTION	LIST
H	Standard	$ 9.50
L	Lever	$ 9.50
G	Guarded‡ Note: Only available with a Polyester Clamp Ring.	$15.00

V. HANDLE/INSERT COLOR

CODE	HANDLE COLOR	INSERT COLOR
BK	Black	White
BE	Blue‡	White
GY	Grey	White
RD	Red	White

VI. OPTIONS - ADD-ON CONTACT BLOCKS

2-POSITION CONTACT BLOCK CIRCUIT DESIGNATION

	HANDLE POSITION			
CODE	LEFT	RIGHT	CONTACT BLOCK TYPE	LIST
G	X	0	22CBNC‡	$13.00

3-POSITION CONTACT BLOCK CIRCUIT DESIGNATION

	HANDLE POSITION				
CODE	LEFT	CENTER	RIGHT	CONTACT BLOCK TYPE	LIST
DF	0 X	X X	X 0	22CB2DB‡	$25.00

DISCOUNT SCHEDULE **E**

0 = OPEN X = CLOSED

‡NOTE: Products marked with ‡ are not available for same-day shipping. Contact our Customer First Team for lead times and minimum order quantities.

HANDLE POSITIONS

2-POSITION	3-POSITION

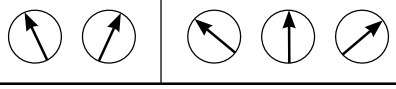

22mm NEMA Non-Illuminated Selector Switches

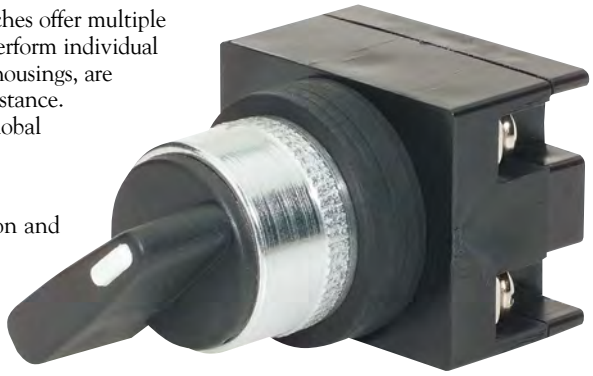

With our unique universal cam design, c3controls 22mm NEMA Selector Switches offer multiple functions in a single device eliminating the need to install separate devices to perform individual functions based on contact block configuration. All operators feature polyester housings, are UL Listed, and are rated Type 4/4X as standard for watertight and corrosion resistance. In addition, operators are also listed for Type 1, 2, 3, 3R, 12 and 13, and meet global standards requirements

Product features include:

- Polyester construction for superior corrosion resistance, moisture rejection and electrical insulation.
- Octagonal polyester or polished aluminum clamp rings.
- #6 terminal screws with self-lifting captive wire clamps accommodate #22 through two #12 AWG wires(0.5 - 4mm^2) per terminal.
- Operators conveniently mount in a round 7/8" (22.5mm) hole that is directly interchangeable with competitors units and eliminates the labor required for notching.
- A600 (7,200 VA Make and 720 VA Break), 600V AC Maximum, Maximum Continuous Thermal Current, Ith: 10A
- P300 (138 VA Make and 138 VA Break), 250V DC Maximum, Maximum Continuous Thermal Current, Ith: 5A

UNIQUE PRODUCT FEATURES

Save time & money - with c3controls, one cam does it all!

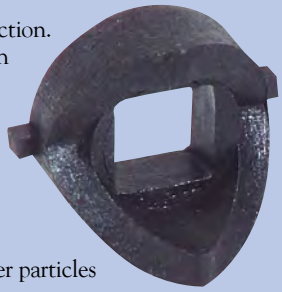

1. One-Cam does it all vs. our competitors who need up to fifteen cams to perform the same function. This One-Cam design eliminates the need for multiple cam configurations and selector switch configuration nightmares, saving time, inventory, money, and ensuring 100% cam selection configuration accuracy.
2. Our revolutionary U-Cup seal is infused with a Teflon coating to eliminate cracking when exposed to conditions such as heat, dryness and sunlight.
3. All frictional parts are molded with an internal self-lubricant to provide outstanding wear and smooth cam operations without troublesome greases used by others that attracts dust and other particles in the area.

Some of Our Popular Configurations:

2-POSITION SELECTOR SWITCH OPERATORS

CONTACT SYMBOL	HANDLE POSITION 0=OPEN X=CLOSED		TYPE OF OPERATOR	MAINTAINED POSITION	
	LEFT	RIGHT		CATALOG #	LIST
1 NO	0	X	STANDARD	22SS2H-XHBK	$41.50
1 NC	X	0	STANDARD	22SS2G-XHBK	$41.50

3-POSITION SELECTOR SWITCH OPERATORS

CONTACT SYMBOL	HANDLE POSITION 0=OPEN X=CLOSED			TYPE OF OPERATOR	MAINTAINED POSITION	
	LEFT	CENTER	RIGHT		CATALOG #	LIST
NO/NO	X	0	0	STANDARD	22SS3AC-XHBK	$51.50

Mix and Match Any Color and Selector Switch Handle

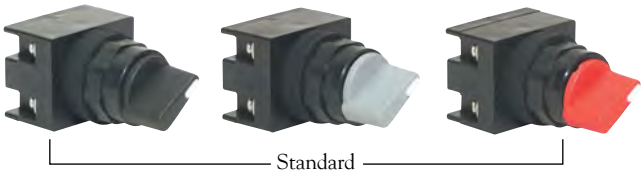

IT'S EASY TO BUILD YOUR OWN POTENTIOMETER

Simply pick the code number from each of the sections below and combine them to build your part number.

Potentiometer Operators

22POTO _____ – _____ – _____
I *II* *III* *IV*

Example: To build one of our most popular Potentiometer Operators, the part number would be 22POTO + II + III + IV or 22POTO5K-TBW

I. OPERATOR TYPE

CODE	DESCRIPTION	LIST
22POTO	Potentiometer	$58.00

II. RESISTANCE

CODE	DESCRIPTION	LIST
(Blank)	Operator only	—
1K	1k Potentiometer	$22.00
2.5K	2.5k Potentiometer	$22.00
5K	5k Potentiometer	$22.00
10K	10k Potentiometer	$22.00

Special order values available—consult factory (not available for guaranteed same day shipping).

III. CLAMP RING

CODE	DESCRIPTION	LIST
(Blank)	Polyester (Type 4X)	—

IV. TERMINAL BLOCK

CODE	DESCRIPTION	LIST
(Blank)	Operator only	—
TBW	Terminal Block installed and wired*	$16.00

NOTE: Available for 1K, 2.5K, 5K and 10K potentiometers.

Terminal block kit may be ordered separately (part number TBK, List price $9.60) or installed and wired at the factory to the potentiometer operator.

DISCOUNT SCHEDULE **E**

SEE PAGE 22 FOR WIRING DIAGRAM.

Unique Product Features

Our single-turn Potentiometer Operators utilize standard 2 watt potentiometers with 1/4" (6.4mm) bushing and 7/8" (22.5mm) long slotted shafts. 5/64" allen wrench is required for installation. All c3controls 22mm NEMA operators are UL Listed and are rated Type 4/4X standard for watertight and corrosion resistance. In addition, operators are also listed for Type 1, 2, 3, 3R, 12 and 13, and meet global standards requirements.

Product features include:

- Polyester construction for superior corrosion resistance, moisture rejection and electrical insulation.
- Three point terminal block and hardware.
- Single-turn standard 2 watt potentiometer.
- All frictional parts are molded with an internal self-lubricant to provide outstanding wear without troublesome greases used by others that attracts dust and other particles in the area.
- Our revolutionary U-Cup seal is infused with a Teflon coating to eliminate cracking when exposed to harsh conditions such as heat, dryness and sunlight.
- #6 terminal screws with self-lifting captive wire clamps accommodate #22 through two #12 AWG wires (0.5 - 4mm^2) per terminal.
- Operators conveniently mount in a round 7/8" (22.5mm) hole that is directly interchangeable with competitors units.

***LEGEND PLATES FOR POTENTIOMETER OPERATORS** are available for same day shipping.*
See pages 17 & 18 for complete selection.

ADD-ON CONTACT BLOCKS

Our "Add-On" Contact Blocks can be added to basic operators to increase the number and type of contacts. Up to three blocks with two circuits each may be added giving a total of eight contacts per operator. Blocks simply screw on the back of the operator. NOTE: The first two contacts must be ordered in operator base.

With our "Add-On" Contact Blocks you can get up to 8 contacts per operator!

CODE	DESCRIPTION	LIST
22CBNO	1 Normally Open Contact Block	$13.00
22CBNC	1 Normally Closed Contact Block	$13.00
22CBDB	1 Delayed Break Contact Block	$17.00
22CBEM	1 Early Make Contact Block	$17.00
22CBNONC	Contact Block w/1 Normally Open & 1 Normally Closed	$23.00
22CB2NO	Contact Block w/2 Normally Open	$23.00
22CB2NC	Contact Block w/2 Normally Closed‡	$23.00
22CBDBNO	Contact Block w/1 Delayed Break & 1 Normally Open	$25.00
22CBDBNC	Contact Block w/1 Delayed Break & 1 Normally Closed	$25.00
22CBEMNO	Contact Block w/1 Early Make & 1 Normally Open	$25.00
22CBEMNC	Contact Block w/1 Early Make & 1 Normally Closed	$25.00
22CB2DB	Contact Block w/2 Delayed Break‡	$28.00
22CBDBEM	Contact Block w/1 Delayed Break & 1 Early Make	$28.00

STANDARD RATING DESIGNATIONS

A600 (AC) RATING DESIGNATION

A600 (7,200 VA Make and 720 VA Break),
600V AC Maximum
Maximum Continuous Thermal Current, Ith: 10A

A600 (AC) RATING DESIGNATION

P300 (138 VA Make and 138 VA Break),
250V DC Maximum
Maximum Continuous Thermal Current, Ith: 5A

DISCOUNT SCHEDULE E

‡NOTE: Products marked with ‡ are not available for same-day shipping. Contact our Customer First Team for lead times and minimum order quantities.

LED REPLACEMENT LAMPS

c3controls miniature bayonet base lamps come in a variety of voltage and color options for direct interchangeability to help in choosing the best lamp for your installation. Refer to the chart below to determine the appropriate replacement lamp based on your operator voltage. For lamp technical data, see page 19.

LED Lamps

LED _____ _____
I II III

Our LED lamps feature built-in leakage protection.

To order LED Lamps, the part number would be LED + II + III

I. LAMP TYPE

CODE	DESCRIPTION	LIST
LED	LED Lamp	$28.00

DISCOUNT SCHEDULE E

II. VOLTAGE

CODE	DESCRIPTION
12	12V
24	24V
130	130V

III. LAMP COLOR

CODE	COLOR
AR	Amber
BE	Blue
GN	Green
RD	Red
WE	White

22MM NEMA REPLACEMENT LAMP REFERENCE CHART
(FOR REFERENCE ONLY - USE CHARTS ABOVE TO ORDER)

OPERATOR CODE	OPERATOR VOLTAGE	LED (ALL COLORS)
22FVL12	Full Voltage 12V AC/DC	LED12
22FVL24	Full Voltage 24V AC/DC	LED24
22FVL120	Full Voltage 120V AC/DC	LED130

*NOTE: Lamps are unique to light units. Refer to side of light unit for correct replacement lamp part number.

CLAMP RING WRENCHES

To simplify tightening and loosening of standard polyester octagonal clamp rings. Won't scratch your lens or panel. Our standard wrench (22CRW) fits all 22mm NEMA operators except mushroom sizes and lever selector switches. Our mushroom wrench (22CRWM) is for use with 22mm NEMA mushroom operators in tight spaces and should be purchased if mushroom caps and/or lever handles are commonly installed for 22X series octagonal polyester only.

CODE	DESCRIPTION	LIST
22CRW	Standard Clamp Ring Wrench	$23.00
22CRWM	Mushroom Clamp Ring Wrench	$25.00

HOLE PLUGS

Use to close and seal unused 7/8" (22.5mm) panel holes. Manufactured with integral "O" ring seal molded on both sides to provide Type 4X rating.

CODE	COLOR	LIST
HP22BK	Black	$11.00
HP22GY	Grey	$11.00

MECHANICAL INTERLOCK

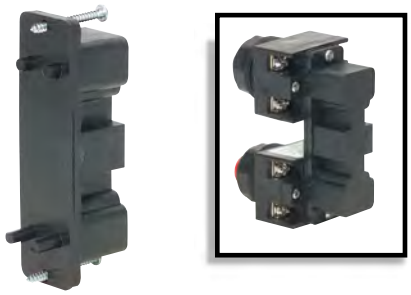

Our Mechanical Interlock is designed for use between two adjacent operators mounted on 2" (50.8mm) centers. Features a built-in mechanical advantage and may be used to interlock momentary push buttons and/or selector switch combinations.

NOTE: Our Mechanical Interlock is not available for same-day shipping. Contact our Customer First Team for lead times and minimum order quantities.

CODE	DESCRIPTION	LIST
22MI	Mechanical Interlock	$23.00

THRUST & TRIM WASHERS

For mounting contact blocks in the horizontal position.
NOTE: Trim washer is not necessary when using a legend plate.

CODE	DESCRIPTION	LIST
22TWH	Thrust Washer Horizontal	$4.00

LOCK OFF ATTACHMENT

Our lock off attachment permits padlocking most 22mm NEMA operators.

NOTE: This product is not compatible with Jumbo Mushroom caps, Dual Push Buttons, and Selector Switches with lever handles.

CODE	FITS	LIST
22LOAFC	Most 22mm Push Buttons and Selector Switches	$50.00

LAMP REMOVAL TOOL

Used to facilitate the removal of lamps.

CODE	DESCRIPTION	LIST
LRT	Lamp Removal Tool	$8.00

PANEL GASKET

Our panel gaskets are constructed of Neoprene for long life and low compression set and provide a watertight seal. Panel gaskets are supplied to accommodate different panel thickness. In order to meet Type 4/4X requirements, at least one gasket must be used.

NOTE: All 22mm NEMA c3controls products come standard with five panel gaskets.

CODE	DESCRIPTION	LIST
22PG2	1/16" (1.6mm) Gasket	$0.20

DISCOUNT SCHEDULE E

IT'S EASY TO BUILD YOUR OWN LEGEND PLATE

Simply pick the code number from each of the sections below and combine them to build your part number.

Legend Plates

_____ _____ – _____ – _____

I II III IV

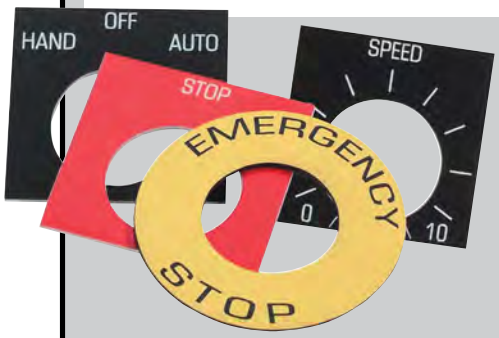

Legend plates feature 2 lines of text with approximately 16 characters per line. Uppercase is standard unless specified. The Potentiometer legend plate comes standard with a scale and one or two lines of text, see chart D below.

I. LEGEND PLATE TYPE

CODE	DESCRIPTION	LIST
22LP	Standard 1-3/4"h x 1-3/4"w	$ 4.00
22LPN	Narrow 1-3/4"h x 1-1/2"w	$ 4.00
22LPS	Short 1-1/2"h x 1-3/4"w*	$ 4.00
22LPT	Tall 2"h x 1-3/4"w	$ 5.00
22LPJ	Jumbo 2"h x 2"w	$ 5.00
22LPR	Standard Round 2-13/32" Dia.	$ 9.00
22LPRM	Medium Round 2-3/4" Dia.	$11.00
22LPRJ	Jumbo Round 3-3/4" Dia.	$12.00

*NOTE: The short legend plate (22LPS) features 1 line of text with approximately 16 characters.

II. FACE AND LETTER COLOR

CODE	FACE COLOR	LETTER COLOR
AL	Aluminum	Black
(Blank)	Black	White
BE	Blue	White
GN	Green	White
RD	Red	White
WE	White	Black
YW	Yellow	Black

III. LEGEND DESIGNATION

A. PUSH BUTTONS AND LIGHTS

CODE	DESCRIPTION
00	(Blank)
01	AUTO
02	CLOSE
31	CYCLE START
100	CYCLE STOP
03	DOWN
102	EMERGENCY
04	EMERGENCY STOP
06	FAST
101	FAULT
07	FORWARD
08	HAND
32	HIGH
33	IN
09	INCH
10	JOG
38	JOG FORWARD
39	JOG REVERSE
34	LOW
35	LOWER
11	MANUAL
26	MOTOR RUN
12	OFF
13	ON
14	OPEN
36	OUT
27	OVERLOAD
15	POWER OFF
16	POWER ON
30	PUSH TO RESET
17	PUSH TO TEST
37	RAISE
109	READY
18	RESET
19	REVERSE
20	RUN
21	SLOW
22	START
23	STOP
24	TEST
29	TRIP
25	UP

B. 2-POSITION SELECTOR

CODE	LEGEND LEFT	LEGEND RIGHT
00	(Blank)	(Blank)
50	AUTO	HAND
68	AUTO	MANUAL
51	DOWN	UP
63	FAST	SLOW
52	FWD	REV
53	HAND	AUTO
73	HIGH	LOW
54	INCH	RUN
75	LEFT	RIGHT
70	LOCAL	REMOTE
55	MANUAL	AUTO
56	OFF	ON
57	ON	OFF
58	OPEN	CLOSE
65	PULL START	PUSH STOP
66	PUSH OFF	PULL ON
64	PUSH ON	PUSH OFF
67	PUSH TO STOP	PULL TO START
71	RAISE	LOWER
59	REV	FWD
60	RUN	JOG
69	SLOW	FAST
61	START	STOP
62	STOP	START
74	SUMMER	WINTER
72	UP	DOWN

C. 3-POSITION SELECTOR

CODE	LEGEND LEFT	LEGEND CENTER	LEGEND RIGHT
00	(Blank)	(Blank)	(Blank)
108	A	O	H
92	AUTO	OFF	HAND
93	AUTO	MAN	OFF
80	DOWN	OFF	UP
81	FWD	AUTO	REV
82	FWD	OFF	REV
107	H	O	A
83	HAND	OFF	AUTO
94	HIGH	OFF	LOW
99	JOG	OFF	AUTO
90	LOCAL	OFF	REMOTE
84	MANUAL	OFF	AUTO
89	OFF	RUN	START
85	OFF	START	RUN
86	OFF	1	2
95	OPEN	OFF	CLOSE
91	RAISE	OFF	LOWER
96	SLOW	OFF	FAST
97	SUMMER	OFF	WINTER
98	UP	OFF	DOWN
87	1	OFF	2
88	1	2	3

D. POTENTIOMETER

CODE	DESCRIPTION
40	Blank Legend 0 - 10
41	"SPEED" 0 - 10
43	Blank Legend 0 - 100
44	"SPEED" 0 - 100

IV. ADHESIVE BACK

CODE	DESCRIPTION
(Blank)	No Adhesive Back
A	Adhesive Back

DISCOUNT SCHEDULE E

IT'S EASY TO BUILD YOUR OWN LEGEND PLATE

Simply pick the code number from each of the sections below and combine them to build your part number.

Special Legend Plates

_____ _____ – SP – _____
I II III IV

All legend plates are a 2-ply laminated plastic, laser engraved for a permanent and quality appearance. Uppercase is standard unless specified.

I. LEGEND PLATE TYPE

CODE	DESCRIPTION	LIST
22LP	Standard 1-3/4"h x 1-3/4"w	$ 4.00
22LPN	Narrow 1-3/4"h x 1-1/2"w	$ 4.00
22LPS	Short 1-1/2"h x 1-3/4"w*	$ 4.00
22LPT	Tall 2"h x 1-3/4"w	$ 5.00
22LPJ	Jumbo 2"h x 2"w	$ 5.00
22LPR	Standard Round 2-13/32" Dia.	$ 9.00
22LPRM	Medium Round 2-3/4" Dia.	$11.00
22LPRJ	Jumbo Round 3-3/4" Dia.	$12.00

Legend plates feature 2 lines of text with approximately 16 characters per line.

*The short legend plate (22LPS) features 1 line of text with 16 characters.

DISCOUNT SCHEDULE **E**

II. FACE AND LETTER COLOR

CODE	FACE COLOR	LETTER COLOR
AL	Aluminum	Black
(Blank)	Black	White
BE	Blue	White
GN	Green	White
RD	Red	White
WE	White	Black
YW	Yellow	Black

III. LEGEND DESIGNATION

CODE	DESCRIPTION	LIST
SP	Special Legend	$14.00

IV. ADHESIVE BACK

CODE	DESCRIPTION
(Blank)	No Adhesive Back
A	Adhesive Back

Upon receipt of your order, legend plates will be set-up as specified and a proof will be sent to you prior to production to ensure accuracy.

To order, submit your drawing to:

Mail: c3controls
Attn: Customer First
PO Box 496
Beaver, PA 15009

Fax: 724.775.5283

Email: legendplates@c3controls.com

To help simplify your order process, templates are available by calling our factory at 724.775.7926 or reference one of the drawings shown on page 24.

Special legend plates are not available for same day shipping.

(Sample custom plate)

Custom Legend Plates

- ***Add your Corporate Logo!*** Send us your corporate logo electronically to promote your company image in a clean professional legend plate.
- Available in 2-ply 12" x 24" (304.8mm x 609.6mm) sheets of laminated plastic for custom laser engraving.
- To order, specify part number 22LP-CP (no adhesive back) or 22LP-CP-A (adhesive back).
- Initial Set-Up Fee Per Legend Plate: $50/hour (minimum fee $50.00).
- $2.00/Square Inch (minimum $18.00).
- Design services available. Consult factory for details and hourly rate.
- Custom legend plates are not available for same-day shipping.

To order, submit your drawing to:

Mail: c3controls
Attn: Customer First
PO Box 496
Beaver, PA 15009

Fax: 724.775.5283

Email: legendplates@c3controls.com

22MM NEMA PILOT DEVICES

ELECTRICAL RATINGS

Lamp	Industry Number	Rated Volts	Lumens (MSCD)	Design Life (Hrs.)	Current Draw (mA)	Lamp Type	Shock & Vibration	Leakage Protection
LED12	**	12V†	Varies w/ Color 2000 mcd Typical	100,000	<20	LED	Excellent	4 mA
LED24	**	24V†			<20			4 mA
LED130	**	130V†			<10			2 mA

** Designates a lamp design optimized for c3controls Illuminated Devices. See LED replacement lamps on page 15.
† LED voltage tolerance is +/- 10%

DIELECTRIC STRENGTH (MECHANICAL CONTACTS) 2200V for 1 Minute

STANDARD CONTACTS

	Utilization Category					
		IEC	UL	Make Rating	Break Rating	Ith-Thermal Current
	AC	AC-15	A600	7200VA	720VA	10A
	DC	DC-13	P300	138VA	138VA	5A

NOTE: For AC voltage below 72VAC the maximum allowed switching current is 10A = Ith
For DC voltages below 28VDC the maximum allowed switching current is 5A = Ith

	UNITS	
ENVIRONMENTAL RATINGS		
Operators		Rated and Certified for use in Type 1, 2, 3, 3R, 4/4X, 12, & 13 and IP65
Operating Temperature	°F / °C	-40 to +131 / -40 to +55
Storage Temperature	°F / °C	-40 to +185 / -40 to +85

NOTE: Operating environments below freezing temperatures are assumed to be absent of freezing liquids or pollutants.

TERMINAL & WIRING CONSIDERATION		
AWG Conductor		22-12 CU (Copper only - Solid & Stranded) [.5 ~ 4mm^2] One or two wires permitted per termination
Recommended Torque	Lb-in. [Nm]	7 (+3.0/-0.0) [.8]
CONSTRUCTION		
OPERATING FORCES		
PUSH BUTTONS (1 CONTACT/2 CONTACT)		
Momentary	lbs. [N]	3.5/4.0 [15.5/17.8]
Illuminated	lbs. [N]	4.0/5.0 [17.8/22.0]
Maintained (1NC)	lbs. [N]	8.5 [37.8]
SELECTOR SWITCHES (2 CONTACTS)		
Maintained	in-lbs. [Nm]	3.5 [.4]
Momentary	in-lbs. [Nm]	4.5 [.51]
POTENTIOMETER		
2 Watt "J" Series	in-oz. [Nm]	3-12 [.11 Max.] (300° Rotation)
CONTACT ADD-A-BLOCK (SINGLE POLE)	lbs. [N]	.5/pole [2.2]
INDICATING LIGHTS		Refer to the appropriate Lamp Data
MECHANICAL ENDURANCE		
PUSH BUTTONS		
Momentary	Ops.	5,000,000
Maintained	Ops.	1,000,000
SELECTOR SWITCHES	Ops.	500,000
ALL OTHER DEVICES	Ops.	250,000
CONTACT BLOCKS	Ops.	5,000,000
INDICATING LIGHTS	Ops.	Refer to the appropriate Lamp Data

22MM NEMA PILOT DEVICES		
	UNITS	
MATERIALS		
Operator Housings		Thermoplastic Polyester and Polyester Blends (UV Stabilized for outdoor use)
Operator Caps and Handles - Non-Illuminated (Glass Reinforced Grades)		Thermoplastic Polyester and Polyester Blends (UV Stabilized for outdoor use)
Mounting Rings and Nuts		Thermoplastic Polyester and Polyester Blends (UV Stabilized for outdoor use)
Thrust Washer		Thermoplastic Polyester and Polyester Blends (UV Stabilized for outdoor use)
Trim Washer		Thermoplastic Polyester and Polyester Blends (UV Stabilized for outdoor use)
Pilot Light Lens		High Impact Polycarbonate (UV Stabilized for outdoor use)
Transparent Push Button and Mushroom Caps		High Impact Polycarbonate (UV Stabilized for outdoor use)
Certain CAM and Bearing Parts		Custom Polymers: Teflon, Silicon and Moly-Disulfide impregnated for improved wearability
Rubber Boots		Custom Polymers: Thermoplastic Neoprene
Seals		Neoprene Gaskets
		Thermoplastic - Molded Neoprene and Alloy Derivitives
		BUNA N - Rubber - Teflon Coated
		Thermoplastic - Elastomer Molded Seals
Push Pull Bushings		Brass (plated and un-plated)
Detents for Maintained Devices		Brass (plated and un-plated)
Springs		Stainless Steel throughout
Optional Mounting Nut		Aluminum
ROHS COMPLIANCE		For RoHS compliance documentation by product, refer to www.c3controls.com

MOMENTARY NON-ILLUMINATED PUSH BUTTONS

Fully-assembled operators come standard with five 1/16" (1.5mm) gaskets. See page 24 for mounting gasket specifications.

Momentary Non-Illuminated Operator (shown with Flush Cap)

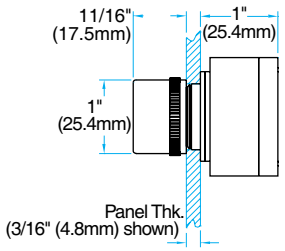

Momentary Extended Cap

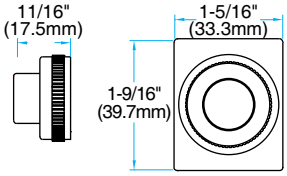

Momentary Non-Illuminated Operator (shown with 1-5/32" (27mm) Mushroom Cap)

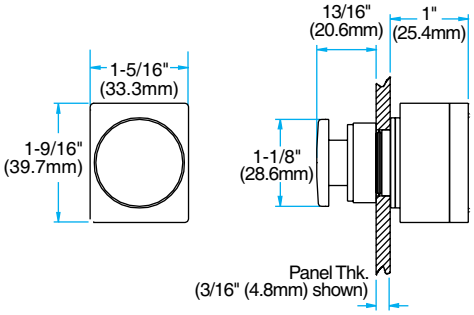

MOMENTARY ILLUMINATED PUSH BUTTONS

Fully-assembled operators come standard with five 1/16" (1.6mm) gaskets. See page 24 for mounting gasket specifications.

Illuminated Full Voltage Operator (shown with IFC)

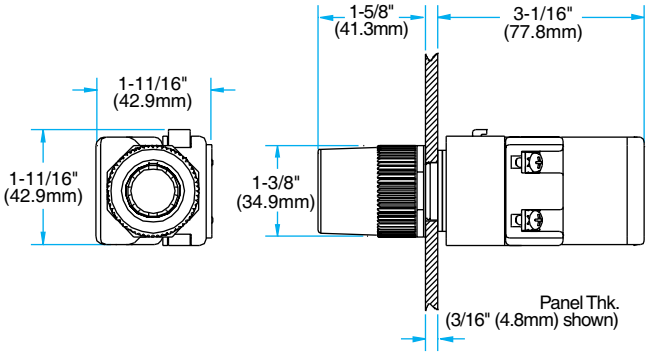

Illuminated Full Voltage Operator (shown with IXC)

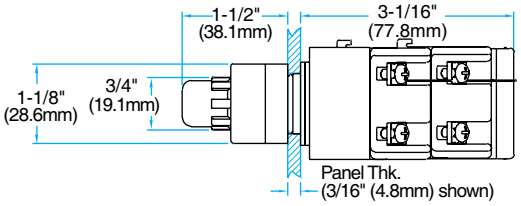

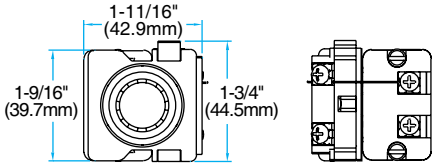

MAINTAINED NON-ILLUMINATED PUSH BUTTONS

Fully-assembled operators come standard with five 1/16" (1.5mm) gaskets. See page 24 for mounting gasket specifications.

2-Position Push-Pull Maintained Non-Illuminated Operator (Shown with 1-1/2" (38mm) Mushroom Cap)

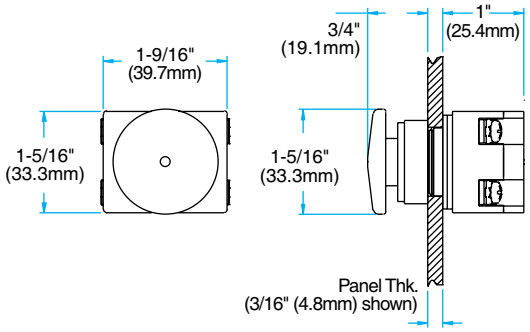

PILOT LIGHTS

Fully-assembled operators come standard with five 1/16" (1.6mm) gaskets. See page 24 for mounting gasket specifications.

Full Voltage Pilot Light Operator (shown with PL)

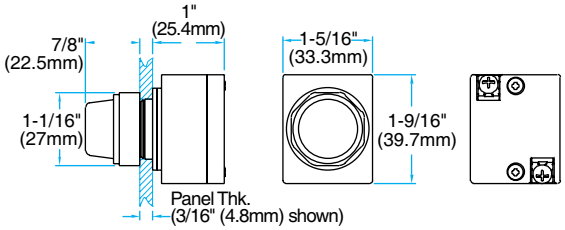

SELECTOR SWITCHES

Fully-assembled operators come standard with five 1/16" (1.6mm) gaskets.
See page 24 for mounting gasket specifications.

Selector Switch Operator (shown with standard handle)

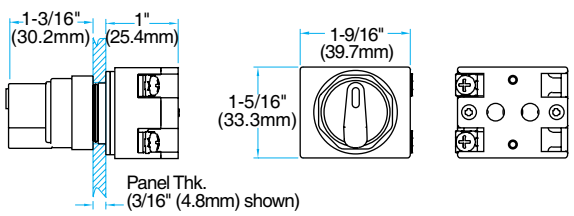

Selector Switch Operator (shown with lever handle)

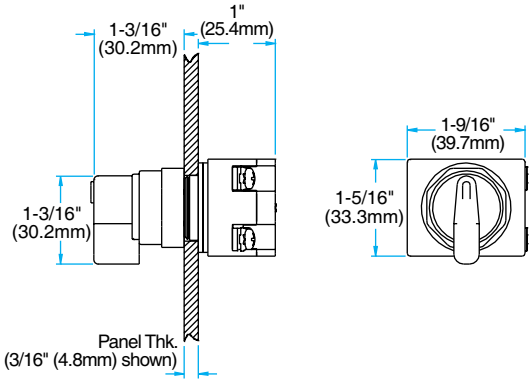

POTENTIOMETER WITH & WITHOUT TERMINAL BLOCK

Fully-assembled operators come standard with five 1/16" (1.6mm) gaskets.
See page 24 for mounting gasket specifications.

Potentiometer Operator (shown without Terminal Block)

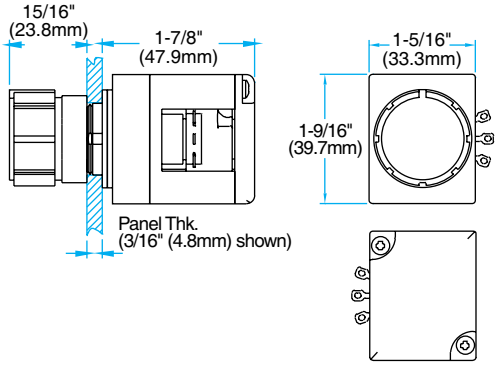

Potentiometer Operator (shown with Terminal Block)

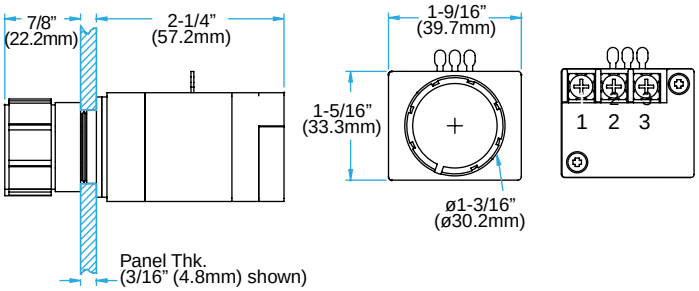

Wiring Diagram

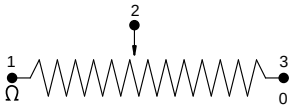

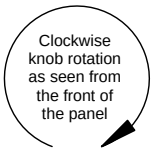

Measuring Between Terminals:

1 & 2 Decreasing Resistance (↓ Ω)

2 & 3 Increasing Resistance (↑ Ω)

2 is the common

CONTACT BLOCK

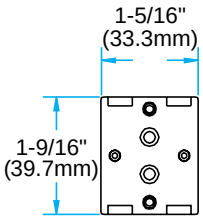

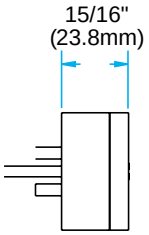

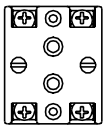

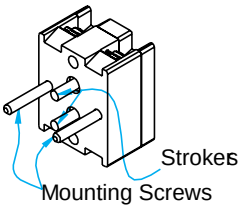

LOCK-OFF ATTACHMENT

22LOAFC

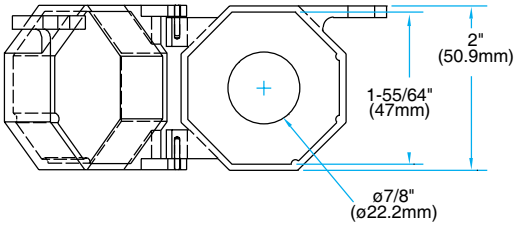

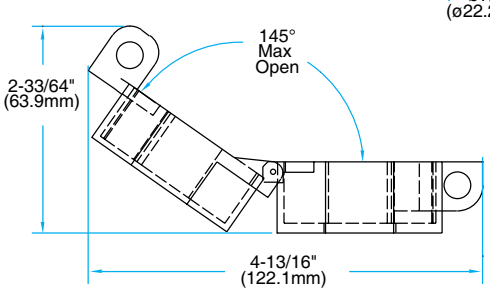

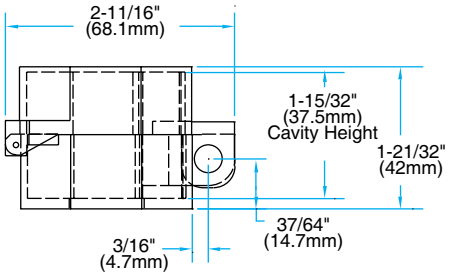

VISIT WWW.C3CONTROLS.COM TO DOWNLOAD CAD DRAWINGS

LEGEND PLATES

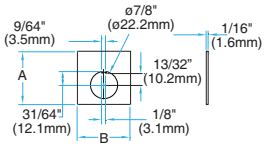

22LP
STANDARD

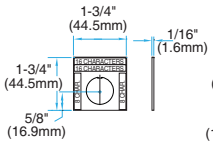

22LPN
NARROW

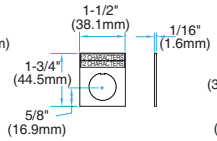

22LPS
SHORT

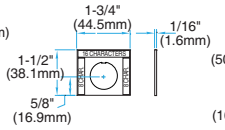

22LPT
TALL

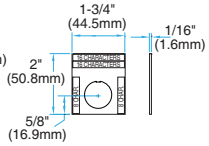

22LPJ
JUMBO

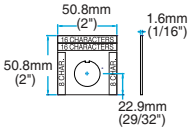

22LP-40
STANDARD POTO

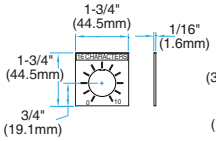

22LPS-40
SHORT POTO

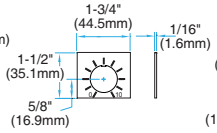

22LPT-40
TALL POTO

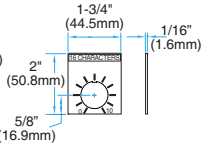

22LPJ-40
JUMBO POTO

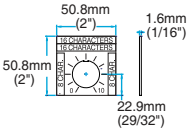

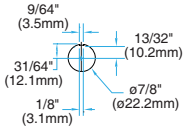

22LPR
STANDARD ROUND

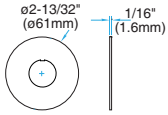

22LPRM
MEDIUM ROUND

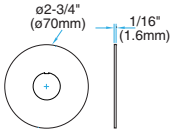

22LPRJ
JUMBO ROUND

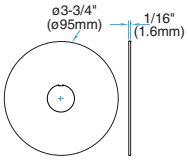

Note: Legend plates feature a tab for optional break-away positioning and can be used in conjunction with the Thrust & Trim Washer accessory.

MOUNTING HOLE PATTERN

MOUNTING HOLE PATTERN

SPACING	A	B
Minimum	1-3/4" (44.5mm)	1-3/4" (44.5mm)
Standard	2" (50.8mm)	2" (50.8mm)

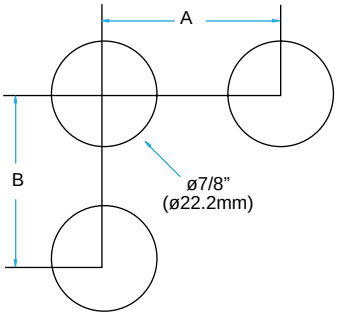

MOUNTING GASKETS

MOUNTING GASKETS

PANEL THICKNESS IN DECIMALS	# OF 1/16" (1.6MM) GASKETS NEEDED
.040 – .060	5
.061 – .115	4
.116 – .170	3
.171 – .220	2

NOTE: Remove one 1/16" (1.6mm) gasket when using a legend plate.

16MM PILOT LIGHTS

series 16

When you need a space-saving pilot light with plenty of special features and flexibility, look to c3controls. Our 16mm pilot lights feature Lexan™ lenses in a variety of colors, and are built to handle even the harshest of environments. Our 100,000-hour LED lamps with leakage protection provide bright light output with superior visibility. And we've increased the range of our Multi-Voltage LED light unit to operate at any voltage from 20V to 277V AC or DC!

Section 19

Indicating Lights	4
Multi-Voltage Pilot Lights	6
Legend Plates	8
Accessories	10
Specifications	11
Dimensions	12

PROVEN

Conformity to Standards:

INDICATING LIGHTS

UL 508

CSA C22.2 No. 14

IEC 60947-1, 60947-5-1

MULTI-VOLTAGE PILOT LIGHTS

UL 508

IEC 60947-1, 60947-5-1

Certifications:

UL File #: E68568 (Guide NKCR, NKCR7)

CSA File #: 47446-9

CE Marked (per EU Low Voltage Directive 2006/95/EC and RoHS Directive 2011/65/EU)

UL File #: E68568 (Guide NKCR, NKCR7)

CE Marked (per EU Low Voltage Directive 2006/95/EC and RoHS Directive 2011/65/EU)

Visit www.c3controls.com to download product certifications.

NOTE: The scope (range, description, price, specifications, dimensions, etc.) of the product featured in this section is subject to change without notice. Refer to www.c3controls.com for product updates.

16MM PILOT LIGHTS

Within our extensive product portfolio is our line of 16mm Pilot Lights, just one example of our superior product quality. Each product is designed and manufactured to meet the needs of the machine builder. Check out all the features of our Series 16 below!

COMPACT LIGHTS SAVE YOU VALUABLE SPACE WHERE YOU NEED IT MOST

✓ **Proven**	Our 16mm operators are UL Listed, CSA Certified and CE marked meeting global standards requirements.
✓ **Quick and Simple**	Front panel mounting for simple installation and lamp replacement.
✓ **Environmentally Secure**	With 4/4X and IP65 ratings, our 16mm line of pilot lights are built to last and withstand dust, corrosion, ice, and rain.
✓ **Long Lasting**	Our reflection technology and state-of-the-art LED lamps improve visibility from all angles, and c3controls LED lamps last 100,000 hours—that's 11.4 years!
✓ **Light Units Run Cool**	With premium engineered thermoplastics the light units run cool while providing extreme light intensity versus competitor units that run hot and produce high heat.
✓ **Heavy Duty**	Polyester construction provides superior durability, corrosion resistance, moisture rejection and electrical insulation, and encases the resistors to keep heat away from the wires.
✓ **Simple Customization**	Various lens color options are available for appropriate operator interface.
✓ **Visible Certifications**	Our product certifications and electrical ratings are clearly marked on the outside of the operator for easy reference during installation.
✓ **Enhanced Safety**	Our field-installable IP20 terminal guards are transparent to maintain terminal visibility and they snap securely in place without the use of tools.
✓ **Stability**	All 16mm lights use a miniature bayonet base to provide reliable security for the lamps.
✓ **36-Month Warranty***	Every product is backed by our 36-Month Warranty—giving you confidence in the quality, reliability, and performance of components designed for the most demanding applications.
✓ **Guaranteed Same-Day Shipping***	Product availability reduces inventory, and improves cash-flow—saving you money. With c3controls any order for standard catalog items received by 6:00pm ET is guaranteed to ship same-day.
✓ **Advantage Pricing**	Our approach to product development, manufacturing, and focus on servicing the OEM and Electrical Equipment Builder reduces cost. The result—the best value in the industry.

*See c3controls Terms & Conditions

> *By utilizing a c3controls pilot light that works in 20V-277V AC and DC terminals, we're able to streamline our inventory requirements because we only need one product for any application.*
>
> Mike Hughes, President • **Packaged Refrigeration Systems**

Full Voltage Indicating Pilot Light

Indicating Pilot Light

Multi-Voltage Pilot Light

UNIQUE PRODUCT LINE FEATURES

EXCLUSIVE MULTI-VOLTAGE LIGHTS

c3controls state-of-the-art multi-voltage light modules—the only U.S. engineered multi-voltage light in the industry!—operate at any voltage from 20V to 277V AC or DC without losing intensity.

WIDE RANGE OF APPLICATIONS

Multiple light designs in full voltage, resistor, and multi-voltage to cover a broad variety of applications up to 600V.

QUALITY MATERIALS

c3controls selects the highest quality raw materials to ensure our products outlast the competition, including Lexan™ plastic for our lenses—improving visibility and resistance to high impact for reliable performance, even in high ambient temperatures.

FIND IT FAST

16mm Pilot Lights

- Certifications
- Specifications
- Dimension Drawings
- Installation Instructions
- Easy to Buy

www.c3controls.com

IT'S EASY TO BUILD YOUR OWN PILOT LIGHT

Simply pick the code number from each of the sections below and combine them to build your part number.

Indicating Lights

_____ _____ – MPLL _____ – _____
I II III IV V

Example: To build one of our most popular Pilot Lights, the part number would be I + II + MPLL + IV + V or MFVL120LG-MPLLGN

I. LIGHT MODULE TYPE & VOLTAGE

CODE	DESCRIPTION	LIST
FULL VOLTAGE (SHORT CASE)		
MFVL12	12V AC/DC	$46.00
MFVL24	24V AC/DC	$46.00
MFVL120	120V AC/DC	$46.00
RESISTOR (CASE SIZE VARIES)		
MRL120*	120V AC/DC	$50.00
MRL125D*	125V AC/DC	$50.00
MRL140D	140V DC	$50.00
MRL240	240V AC/DC	$50.00

*NOTE: MRL120 & MRL125D have grey housings.

II. LED LAMP COLOR

CODE	COLOR	LIST
LA	Amber	$18.00
LB	Blue	$18.00
LG	Green	$18.00
LR	Red	$18.00
LW	White	$18.00
NL	**No Lamp**	– $ 1.80

III. LENS TYPE

CODE	DESCRIPTION	LIST
MPLL	Miniature Pilot Light Lens	$ 6.00

IV. LENS COLOR

CODE	COLOR
AR	Amber
BE	Blue
CR	Clear
GN	Green
RD	Red
WE	White

V. OPTIONS

CODE	DESCRIPTION	LIST
(Blank)	None	—
IP20	IP20 Guard	$ 4.00

SEE PAGE 10 FOR LAMP REPLACEMENT CHART AND PAGE 11 FOR LAMP TECHNICAL DATA.

DISCOUNT SCHEDULE E

AVAILABLE LENS COLORS FOR INDICATING PILOT LIGHTS

16mm Indicating Lights

Our 16mm Indicating Lights feature polyester construction for superior corrosion resistance, moisture rejection and electrical insulation. All units are supplied with #6 terminal screws with self-lifting captive wire clamps to accommodate #22 through two #12 AWG wires (0.5 - 4mm^2) per terminal. Nickel plated clamp rings are ideal for corrosive environments. All units mount in a round 5/8" (16mm) hole and are directly interchangeable with competitor units. Units are available in different case depths for easy installation in your control panel – whatever the dimensions. All c3controls 16mm operators are UL Listed and are rated Type 4/4X as standard for watertight and corrosion resistance. In addition, light units are also listed for Type 1, 2, 3, 3R, 12, 13 and IP65.

Product features include:

- All lights use miniature bayonet base lamps to provide reliable lamp secureness.

UNIQUE PRODUCT FEATURES

1. Thin, compact, insulating polyester housing provides added protection for those tight fitting spaces.
2. Premium engineered thermoplastics keep the light units running cool while providing extreme light intensity versus competitor units that run hot and produce high heat.
3. Heavy-duty brass current carrying components for improved conductivity and corrosion resistance.
4. High-tech LED lamps offer the latest and most current technology providing leakage protection, great light output and increased visibility for side views – *and lasts up to 100,000 hours!*
5. Front of panel lamp change without removing device from panel.
6. Our rugged Lexan™ lenses can resist high impact for reliable performance in most environments – even in high ambient temperatures.
7. Enhanced safety with field installable IP20 terminal guards are transparent to maintain terminal visibility. Their construction provides easy access to the device terminals – making wiring fast and convenient, and they snap securely in place without the use of tools.

   For convenient terminal marking our IP20 terminal guards utilize Series WTB2 markers (see Section 22 Page 32), simplifying wiring and troubleshooting.

Some of Our Popular Configurations:

16MM INDICATING LIGHTS

PART NUMBER	DESCRIPTION	LIST
MRL120LR-MPLLRD	120V Resistor w/Red LED and Red Lens	$74.00
MRL120LA-MPLLAR	120V Resistor w/Amber LED and Amber Lens	$74.00
MFVL120LG-MPLLGN	120V Full Voltage w/Green LED and Green Lens	$70.00

IT'S EASY TO BUILD YOUR OWN PILOT LIGHT

Simply pick the code number from each of the sections below and combine them to build your part number.

20-277V Multi-Voltage Pilot Lights

_____ _____ _____ – MPLL _____ – _____

I *II* *III* *IV* *V* *VI*

Example: To build one of our most popular Pilot Lights, the part number would be **I + II + III + MPLL + V + VI** or **16MV20-277DLW-MPLLGN**

I. OPERATOR TYPE

CODE	DESCRIPTION	LIST
16MV20-277	Non-Relampable Multi-Voltage Pilot Light	$76.00

II. LED LAMP FUNCTION

CODE	DESCRIPTION
D	Standard

III. LED LAMP COLOR

CODE	DESCRIPTION	LIST
LW	White	—

IV. LENS TYPE

CODE	DESCRIPTION	LIST
MPLL	Miniature Pilot Light Lens	$ 6.00

c3controls LED lamps last 100,000 hours — *that's 11.4 years!*

V. LENS COLOR

CODE	DESCRIPTION
AR	Amber
BE	Blue
CR	Clear
GN	Green
RD	Red
WE	White

VI. OPTIONS

CODE	DESCRIPTION	LIST
(Blank)	None	—
IP20	IP20 Guard	$ 4.00

DISCOUNT SCHEDULE **E**

SEE PAGE 10 FOR LAMP REPLACEMENT CHART AND PAGE 11 FOR LAMP TECHNICAL DATA.

SOME OF OUR POPULAR CONFIGURATIONS:

16MM MULTI-VOLTAGE PILOT LIGHTS

PART NUMBER	DESCRIPTION	LIST
16MV20-277DLW-MPLLAR	Multi-Voltage 20-277V, Non-Relampable w/ White LED and Amber Lens	$82.00
16MV20-277DLW-MPLLGN	Multi-Voltage 20-277V, Non-Relampable w/ White LED and Green Lens	$82.00
16MV20-277DLW-MPLLRD	Multi-Voltage 20-277V, Non-Relampable w/ White LED and Red Lens	$82.00

AVAILABLE LENS COLORS FOR MULTI-VOLTAGE PILOT LIGHTS

16mm Multi-Voltage Pilot Lights

Our 16mm Multi-Voltage Pilot Lights feature polyester construction for superior corrosion resistance, moisture rejection and electrical insulation. All units are supplied with #6 terminal screws with self-lifting captive wire clamps to accommodate #22 through two #12 AWG wires (0.5 - 4mm^2) per terminal. Nickel plated clamp rings are ideal for corrosive environments. All units mount in a round 5/8" (16mm) hole and are directly interchangeable with competitor units. The compact size means you can put more into a smaller panel, lowering your cost while boosting the functionality of your machine.

Product features include:

- UL Listed Type 1, 2, 3, 3R, 4/4X, 12, 13 and IP65 ratings for the most demanding applications—including wash-downs and corrosive environments.
- Heavy-duty brass current carrying components for improved conductivity and corrosion resistance.
- Bi-polar design means functionality is independent of which lead is connected to each terminal.
- Rugged Lexan™ lenses resist high impact for reliable perfomance in most environments—even in high ambient temperatures.
- Superior performance even in applications with shock and vibration.
- Enhanced safety with field installable IP20 terminal guards are transparent to maintain terminal visibility. Their construction provides easy access to the device terminals—making wiring fast and convenient, and they snap securely in place without the use of tools.

  For convenient terminal marking our IP20 guards utilize Series WTB2 markers (see Section 22 Page 32), simplifying wiring and troubleshooting.

UNIQUE PRODUCT FEATURES

c3 Exclusive!

Eliminate the Headache of Multiple Lights to Match Multiple Voltages!

Our state-of-the-art, super bright LEDs and printed circuit boards allow you to operate this light at any voltage from 20V to 277V AC or DC without losing light intensity or consuming a lot of power. One light unit covers a lot of applications, reducing your inventory! All you have to do is choose your lens color.

- Wider operating voltage range of 20V-277V AC or DC.
- Depth behind the panel at 1-23/32" (43.6mm).
- Integrated light circuit protection. We included a fusible link in the electronic circuit, resulting in predictable failure mode (open circuit) and improving reliability.
- A redesigned circuit allows you to use the light unit in a wider range of applications, including electronic and coil applications where leakage current and voltages may exist.

IT'S EASY TO BUILD YOUR OWN LEGEND PLATE

Simply pick the code number from each of the sections below and combine them to build your part number.

Legend Plates

_____ _____ – _____ – _____

I *II* *III* *IV*

All legend plates are a 2-ply laminated plastic, laser engraved for a permanent and quality appearance. Uppercase is standard unless specified.

I. LEGEND PLATE TYPE

CODE	DESCRIPTION	LIST
MLLP	Standard 2"h x 2"w	$ 5.80
MLLPH	Horizontal 1"h x 2"w	$ 5.80
MLLPV	Vertical 2"h x 1"w	$ 5.80

Legend plates feature 4 lines of text with approximately 7 characters per line.

II. FACE AND LETTER COLOR

CODE	FACE COLOR	LETTER COLOR
AL	Aluminum	Black
(Blank)	Black	White
BE	Blue	White
GN	Green	White
RD	Red	White
WE	White	Black
YW	Yellow	Black

III. LEGEND DESIGNATION

CODE	DESCRIPTION
00	(BLANK)
01	AUTO
02	CLOSE
26	MOTOR RUN
12	OFF
13	ON
14	OPEN
27	OVERLOAD
15	POWER OFF
16	POWER ON
18	RESET
20	RUN
24	TEST
29	TRIP

IV. ADHESIVE BACK

CODE	DESCRIPTION
(Blank)	No Adhesive Back
A	Adhesive Back

NOT FINDING WHAT YOU NEED IN A STANDARD PLATE?

We offer Special and Custom Engraving up to 12" x 24" (304.8mm x 609.6mm). Consult factory or see page 9 for details.

While our standard legend plates are available for same day shipping, our special and custom legend plates are not.

DISCOUNT SCHEDULE E

IT'S EASY TO BUILD YOUR OWN LEGEND PLATE

Simply pick the code number from each of the sections below and combine them to build your part number.

Special Legend Plates

I	II	– SP – III	IV

All legend plates are a 2-ply laminated plastic, laser engraved for a permanent and quality appearance. Uppercase is standard unless specified.

I. LEGEND PLATE TYPE

CODE	DESCRIPTION	LIST
MLLP	Standard 2"h x 2"w	$ 5.80
MLLPH	Horizontal 1"h x 2"w	$ 5.80
MLLPV	Vertical 2"h x 1"w	$ 5.80

Legend plates feature 4 lines of text with approximately 7 characters per line.

II. FACE AND LETTER COLOR

CODE	FACE COLOR	LETTER COLOR
AL	Aluminum	Black
(Blank)	Black	White
BE	Blue	White
GN	Green	White
RD	Red	White
WE	White	Black
YW	Yellow	Black

III. LEGEND DESIGNATION

CODE	DESCRIPTION	LIST
SP	Special Legend	$14.00

IV. ADHESIVE BACK

CODE	DESCRIPTION
(Blank)	No Adhesive Back
A	Adhesive Back

DISCOUNT SCHEDULE **E**

Upon receipt of your order, legend plates will be set-up as specified and a proof will be sent to you prior to production to ensure accuracy.

To order, submit your drawing to:

Mail: c3controls
Attn: Customer First
PO Box 496
Beaver, PA 15009

Fax: 724.775.5283

Email: legendplates@c3controls.com

To help simplify your order process, templates are available by calling our factory at 724.775.7926 or reference one of the drawings shown on page 12.

Special legend plates are not available for same day shipping.

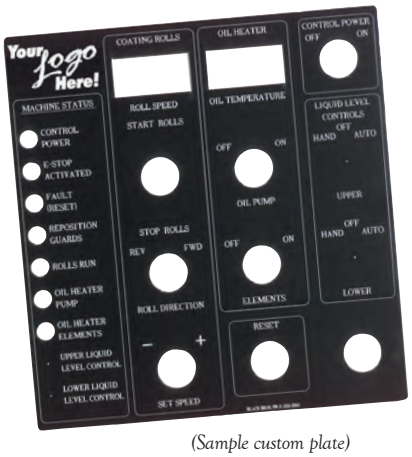

(Sample custom plate)

Custom Legend Plates

- ***Add your Corporate Logo!*** Send us your corporate logo electronically to promote your company image in a clean professional legend plate.
- Available in 2-ply 12" x 24" (304.8mm x 609.6mm) sheets of laminated plastic for custom laser engraving.
- To order, specify part number MLLP-CP (no adhesive back) or MLLP-CP-A (adhesive back).
- Initial Set-Up Fee Per Legend Plate: $50/hour (minimum fee $50.00).
- $2.00/Square Inch (minimum $18.00).
- Design services available. Consult factory for details and hourly rate.
- Custom legend plates are not available for same-day shipping.

To order, submit your drawing to:

Mail: c3controls
Attn: Customer First
PO Box 496
Beaver, PA 15009

Fax: 724.775.5283

Email: legendplates@c3controls.com

LED REPLACEMENT LAMPS

c3controls miniature bayonet base lamps come in a variety of voltage and color options for direct interchangeability to help in choosing the best lamp for your installation. Refer to the chart below to determine the appropriate replacement lamp based on your operator voltage. For lamp technical data, see page 11.

LED Lamps

LED _____ _____
I *II* *III*

To order LED Lamps, the part number would be LED + II + III

I. LAMP TYPE

CODE	DESCRIPTION	LIST
LED	LED Lamp	$28.00

Our LED lamps feature built-in leakage protection.

DISCOUNT SCHEDULE E

II. VOLTAGE

CODE	DESCRIPTION
12	12V
24	24V
130	130V

III. LAMP COLOR

CODE	COLOR
AR	Amber
BE	Blue
GN	Green
RD	Red
WE	White

16MM REPLACEMENT LAMP REFERENCE CHART *(FOR REFERENCE ONLY - USE CHART ABOVE TO ORDER)*

OPERATOR CODE	OPERATOR VOLTAGE	LED (ALL COLORS)	INCANDESCENT	NEON
MFVL12	Full Voltage 12V AC/DC	LED12	FVB12	—
MFVL24	Full Voltage 24V AC/DC	LED24	FVB24	—
MFVL120	Full Voltage 120V AC/DC	LED130	FVB120	FVB120NG or FVB120NR
MRL120L	Resistor 120V AC/DC*	LED24	—	—
MRL125DL	Resistor 125V DC*	LED24	—	—
MRL140DL	Resistor 140V DC*	LED24	—	—
MRL240L	Resistor 240V AC/DC*	LED24	—	—
MRTL6	Dual Input 6V AC/DC	LED6	FVB6	—
MRTL12	Dual Input 12V AC/DC	LED12	FVB12	—
MRTL24	Dual Input 24V AC/DC	LED24	FVB24	—
MRTL120	Dual Input 120V AC/DC	LED130	FVB55	—

*NOTE: Lamps are unique to Resistor Light Units. Refer to side of light unit for correct replacement lamp part number. For assistance, consult factory.

LAMP REMOVAL TOOL

Used to facilitate the removal of lamps.

CODE	DESCRIPTION	LIST
LRT	Lamp Removal Tool	$ 8.00

CLAMP RING WRENCH

To simplify tightening and loosening of standard clamp rings. Won't scratch your lens or panel.

CODE	DESCRIPTION	LIST
16CRW	16mm Clamp Ring Wrench	$16.00

IP20 TERMINAL GUARD

Our IP20 terminal guard protects against accidental contact with live parts and can be ordered separately as an accessory or factory installed providing the convenience of a single catalog number. NOTE: For factory installed guards, refer to the operator page to determine the appropriate part number. For convenient terminal marking our IP20 terminal guards utilize Series WTB2 markers (see Section 22 Page 32), simplifying wiring and troubleshooting.

CODE	FOR USE WITH	LIST
MLIP20	All 16mm Light Modules	$ 4.00

DISCOUNT SCHEDULE E

SPECIFICATIONS:

16MM PILOT LIGHTS

ELECTRICAL RATINGS

Lamp	Industry Number	Rated Volts	Lumens (MSCD)	Design Life (Hrs.)	Current Draw (mA)	Lamp Type	Shock & Vibration	Leakage Protection
LED12	**	12V†	Varies w/ Color 2000 mcd Typical	100,000	<20	LED*	Excellent	4 mA
LED24		24V†			<20			4 mA
LED130		120/130V†			<10			2 mA

MULTI-VOLTAGE POWER CONSUMPTION & CURRENT DRAW

System Voltage	AC Current Draw (mA)	DC Current Draw (mA)	Power Consumption (W)
24V	21	20	AC: <1 DC: <1/2
48V	17	7	
120V	3.5	—	
125V	—	3	
240V	2.5	—	
250V	—	2	
277V	2.5	—	

PROTECTION FEATURES

Fused to Fail Open	Yes

* Specify Lamp color when ordering
** Designates a "Special Order" lamp that is not readily available on the open market
† LED voltage tolerance is +/- 10%

	UNITS	
DIELECTRIC STRENGTH (TERMINAL TO GROUND)		2200V for 1 Minute
ENVIRONMENTAL RATINGS		
Operators		Rated and Certified for use in Type 1, 2, 3, 3R, 4/4X, 12 & 13, and IP65
Operating Temperature	°F / °C	-40 to +131 / -40 to +55
Storage Temperature	°F / °C	-40 to +185 / -40 to +85
TERMINAL & WIRING CONSIDERATION		
AWG Conductor		22-12 CU (Copper Only)
Solid Strand Conductor†	mm^2	.5 ~ 4
Fine Strand Conductor†	mm^2	.5 ~ 4
Recommended Torque	Lb-in.	7 – 10
	Nm	0.8 - 1.0

†One or Two wires permitted per termination

MATERIALS		
Operator Housings		Thermoplastic Polyester and Polyester Blends (UV Stabilized for outdoor use)
Structural Parts		Thermoplastic Polyester and Polyester Blends (UV Stabilized for outdoor use)
Terminal Supports		Thermoplastic Polyester and Polyester Blends (UV Stabilized for outdoor use)
Pilot Light Lens		High Impact Polycarbonate (UV Stabilized for outdoor use)
Seals		Neoprene Gaskets
Front Mounting Nut/Clamp Ring		Brass (Plated and Unplated)
Light Terminations		Brass (Plated and Unplated)
Terminal Screws		Plated Steel - Self Lifting Clamps
ROHS COMPLIANCE		For RoHS compliance documentation by product, refer to www.c3controls.com

FULL VOLTAGE/RESISTOR INDICATING PILOT LIGHT (SHORT CASE)

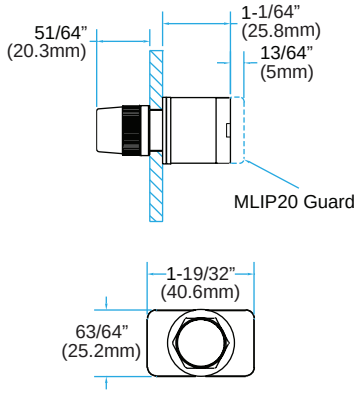

RESISTOR 140V & 240V INDICATING PILOT LIGHT (LONG CASE)

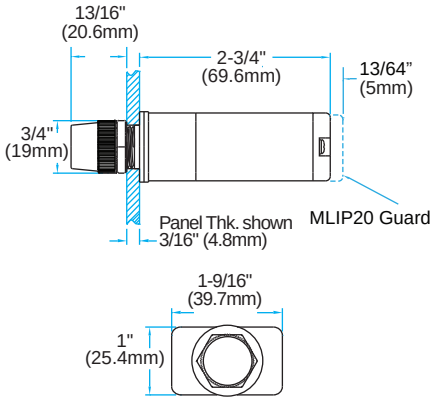

MULTI-VOLTAGE AND RESISTOR 120V & 125V INDICATING PILOT LIGHT

NON-RELAMPABLE & RELAMPABLE

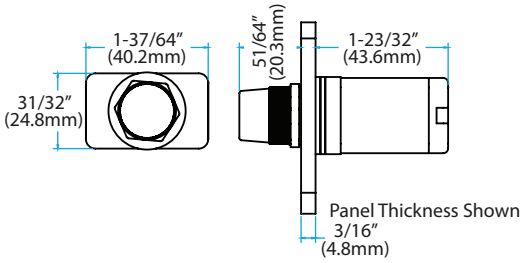

LEGEND PLATE TEMPLATES

STANDARD 2" x 2" (MLLP)

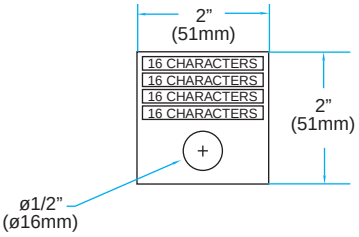

HORIZONTAL 1" x 2" (MLLPH)

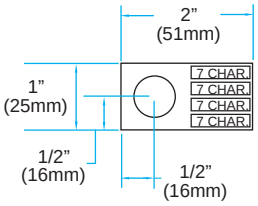

VERTICAL 2" x 1" (MLLPV)

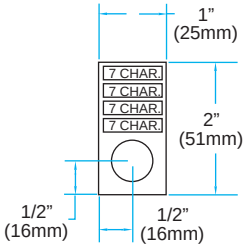

MOUNTING HOLE PATTERN

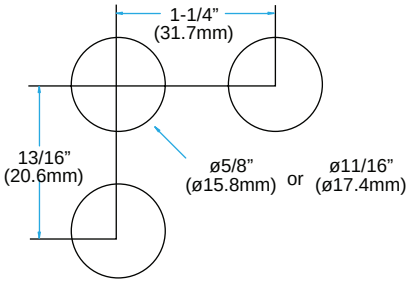

MOUNTING GASKETS

PANEL THICKNESS IN DECIMALS	# OF GASKETS NEEDED 3/16" & 1/16" (4.8mm)	(1.6mm)
less than .06	1	2
.06 – .120	1	1
.120 – .180	1	0
.180 – .240	0	2
.240 – .300	0	1

NOTE: Remove one 1/16" (1.6mm) gasket when using a legend plate.

- Mounting Hole in Panel – 5/8" (16mm).
- Fully-assembled operators come standard with one 3/16" (4.8mm) and two 1/16" (1.6mm) gaskets.

13MM PILOT LIGHTS

series 13

c3controls' line of 13mm LED Pilot Lights utilize traffic-signal LED technology for superior visibility and brightness, even in direct sunlight. Each light comes with internal resistors to match various AC and DC voltages, and are available with self-lifting captive saddle clamps or integral wire leads for easy wiring. All light units come standard with Type 4/4X ingress protection.

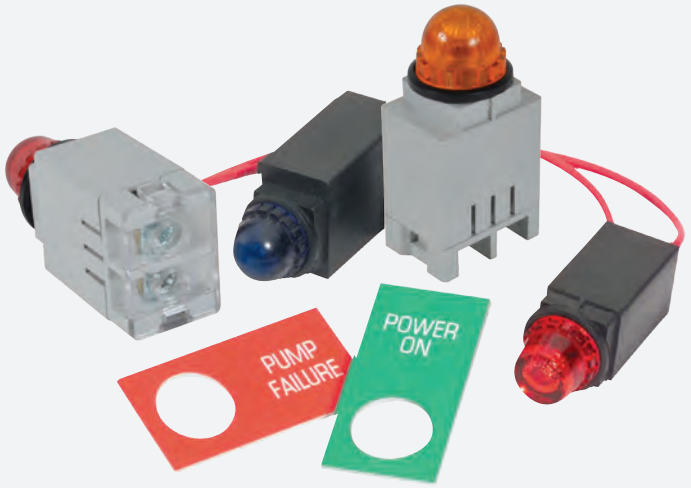

Section 20

Indicating Lights	4
Accessories	6
Legend Plates	6
Specifications	8
Dimensions	9

PROVEN

Conformity to Standards:
UL 508
CSA C22.2 No. 14

IEC 60947-1, 60947-5-1

Certifications:
UL File #: E68568 (Guide NKCR, NKCR7)
CE Marked (per EU Low Voltage Directive 2006/E5/EC and RoHS Directive 2011/65/EU)

Visit www.c3controls.com to download product certifications.

NOTE: The scope (range, description, price, specifications, dimensions, etc.) of the product featured in this section is subject to change without notice. Refer to www.c3controls.com for product updates.

13MM PILOT LIGHTS

All our products are fully certified, rated, and backed by our 36-month warranty to meet the needs of the machine builder, and our 13mm Pilot Lights are no exception. Check out the incredible features in the chart below!

DURABLE AND EFFICIENT LIGHTS FOR YOUR SMALLEST APPLICATIONS	
✓ **Proven**	Our 13mm pilot lights are UL Listed, CE Marked, and are rated Type 4/4X as standard for watertight and corrosion resistance. Also rated for Type 1, 2, 3, 3R, 12 & 13 and IP20.
✓ **Compact Design**	Our 13mm LED pilot lights have the shortest depth behind the panel of any Type 1, 2, 3, 3R, 4, 4X, 12 & 13 and IP20 rated lights in the industry!
✓ **Heavy Duty**	Polyester construction provides superior durability, corrosion resistance, moisture rejection and electrical insulation.
✓ **Multiple Applications**	Light units come with internal resistors to match various AC and DC voltages.
✓ **Quick and Simple**	Front panel mounting for simple installation.
✓ **Simple Customization**	Various lens color options are available for appropriate operator interface.
✓ **Low Energy Consumption**	c3controls 13mm LED Pilot Lights utilize traffic signal LED technology for superior visibility and brightness, even in direct sunlight. LED lamps last 100,000 hours—that's 11.4 years!
✓ **Quality Materials**	c3controls selects the highest quality raw materials to ensure our products outlast the competition, including Lexan™ plastic for our lenses—improving visibility and resistance to high impact for reliable performance, even in high ambient temperatures.
✓ **Convenience**	Each light unit is provided with a dress ring/panel gasket to accommodate a 1/2" (13mm) mounting hole dimension and is designed to be mounted in panels up to 1/8" (3mm) thick.
✓ **36-Month Warranty***	Every product is backed by our 36-Month Warranty—giving you confidence in the quality, reliability, and performance of components designed for the most demanding applications.
✓ **Guaranteed Same-Day Shipping***	Product availability reduces inventory, and improves cash-flow—saving you money. With c3controls any order for standard catalog items received by 6:00pm ET is guaranteed to ship same-day.
✓ **Advantage Pricing**	Our approach to product development, manufacturing, and focus on servicing the OEM and Electrical Equipment Builder reduces cost. The result—the best value in the industry.

*See c3controls Terms & Conditions

> *c3controls engineers solid products that look good in a panel, and when you turn the panel on for the first time, it works every time. The clients are happy, we are happy, and that's why we've stuck with c3controls.*
>
> Al Doberstein, President • **Total Control Systems, Inc.**

Wire Lead Pilot Light

Screw Terminal Pilot Light

UNIQUE PRODUCT LINE FEATURES

COMPACT DESIGN

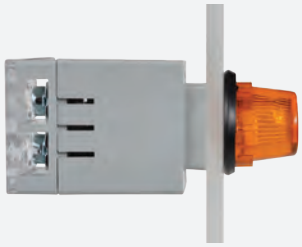

Behind the panel dimensions as small as 3/4" x 1-5/64" (19.1mm x 27.4mm).

WIDE RANGE OF VOLTAGES

Our 13mm pilot lights have a voltage range from 6V to 480V.

FLEXIBILITY

Our customers have the flexibility to order standard screw terminals or custom length factory installed wire leads.

ENHANCED SAFETY

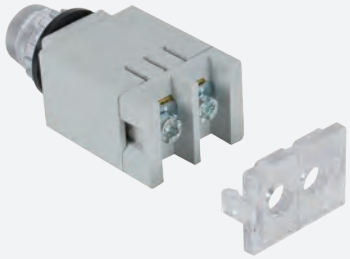

A field installable IP20 terminal guard is available for enhanced safety and protection.

BI-POLAR DESIGN

Our 13mm LED Pilot Lights are designed for bi-polar installation for all AC and DC voltages, making installation even easier.

LEGEND PLATES

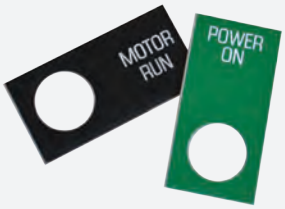

Standard or custom legend plates are available.

FIND IT FAST

13mm Pilot Lights

- Certifications
- Specifications
- Dimension Drawings
- Installation Instructions
- Easy to Buy

www.c3controls.com

IT'S EASY TO BUILD YOUR OWN PILOT LIGHT

Simply pick the code number from each of the sections below and combine them to build your part number.

Indicating Lights (Non-Relampable)

I	II	III	IV	V	– 13 VI	VII	VIII	– IX

Example: To build one of our most popular Pilot Lights, the part number would be I + II + III + IV + V + 13 + VII + VIII or 13SBLG120WL-13GNR

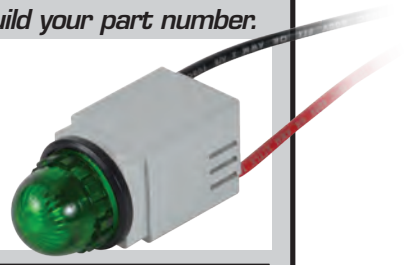

I. LIGHT UNIT BASE

CODE	DESCRIPTION	LIST
13SB	13mm Super Bright LED	$24.00

II. LED LAMP COLOR

CODE	DESCRIPTION
LA	Amber
LB	Blue
LG	Green
LR	Red
LW	White

III. VOLTAGE

CODE	DESCRIPTION
6	6V AC/DC‡
12	12V AC/DC
24	24V AC/DC
120	120V AC/DC
240	240V AC

NOTE: Products marked with ‡ are not available for same-day shipping. Contact our Customer First Team for lead times and minimum order quantities.

IV. TERMINAL STYLE

CODE	DESCRIPTION
ST	Screw Terminal
WL	Wire Lead

V. WIRE LENGTH

CODE	DESCRIPTION	LIST/INCH
(Blank)	Both Leads 6" (152.4mm) [Standard]	—
*	Lead Length in inches [Non-Standard]	$ 0.10

*NOTE: Internal wire leads are available in non-standard custom lengths and various wire color options, including different lengths on the same light. To order, non-standard lead lengths designate length in inches for "Code". Example: Code 36 would represent a 3 ft. lead length.

For different length leads on the same indicating light consult factory.

Custom wire leads are not available for guaranteed same-day shipping.

VI. LENS

CODE	DESCRIPTION	LIST
13	13mm Indicating Light Lens	$ 2.00

VII. LENS COLOR

CODE	COLOR
AR	Amber
BE	Blue
CR	Clear
GN	Green
RD	Red
WE	White

NOTE: See chart below for recommended lamp/lens color combinations.

VIII. LENS TYPE

CODE	DESCRIPTION
R	Round
F	Flat

IX. OPTIONS

CODE	DESCRIPTION	LIST
(Blank)	None	—
IP20	IP20 Guard*	$ 4.00

*NOTE: Only to be used with screw terminals.

DISCOUNT SCHEDULE E

RECOMMENDED LAMP/LENS COLOR COMBINATIONS

LAMP	RECOMMENDED LENS COLORS
LED Amber	Amber or Clear
LED Blue	Blue or Clear
LED Green	Green or Clear
LED Red	Red or Clear
LED White	White or Clear

Mix and Match Any Color and Indicating Light Lens

Round Lens — Flat Lens

13mm Indicating Lights

Our 13mm low-cost Indicating Lights come complete with internal resistor(s) to match various AC and DC voltages. Each unit is provided with a dress ring/panel gasket to accommodate a 1/2" (13mm) mounting hole dimension and is designed to be mounted in panels up to 1/8" (3mm) thick. Conventional front panel mounting simplifies installation. Our 13mm indicating lights are UL Listed and are rated Type 4/4X as standard for watertight and corrosion resistance. In addition, light units are also listed for Type 1, 2, 3, 3R, 12 & 13 and IP20. All wire lead units are supplied with #22 AWG wire (0.5 - 4mm^2) leads, 6" (152.4mm) long and stripped 1/2" (13mm). Custom lengths and various wire color options are available, please consult factory.

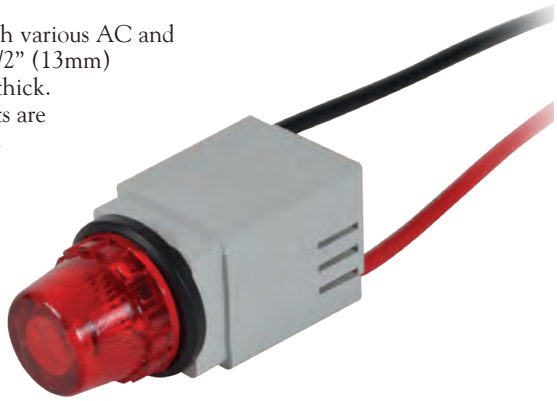

Product features include:

- Wider voltage operating range, up to 240V.
- Industry leading shortest depth behind the panel.
- Polyester construction provides superior corrosion resistance, moisture rejection and electrical insulation.
- Our rugged Lexan™ lenses can resist high impact for reliable performance in most environments — even in high ambient temperatures.

UNIQUE PRODUCT FEATURES

Screw Terminal

Self-lifting captive saddle terminal screws accommodate #22 through two #12 AWG wires (0.5 - 4mm^2) per terminal to provide easy wiring in a broad range of applications. The terminals are arranged for straight through wiring so that bare wire may be "bussed" to multiple light installations providing significant labor savings. These units will also accept "ring" and "fork" connectors. Now available with optional IP20 protection

Wire Lead

Wire leads are supplied standard at 6" (152.4mm) length. They are also available in any specified length including different lengths on the same light (additional charge for non-standard length: $0.10 per inch after the standard first 6" (152.4mm), e.g., 12" (304.8mm) length wire lead = $0.60). This ability to quickly and economically "customize" to match specific wiring applications can provide major installation cost savings. For LEDs, the positive lead is red and the negative lead is black. *While standard 6" wire leads are available for guaranteed same day shipping, our custom wire leads are not–please consult factory.*

Some of Our Popular Configurations:

13MM INDICATING LIGHTS

PART NUMBER	DESCRIPTION	LIST
13SBLR120ST-13RDR	120V Super Bright Red LED w/Screw Terminal and Red Round Lens	$26.00
13SBLG120WL-13GNF	120V Super Bright Green LED w/Wire Lead Terminal and Green Flat Lens	$26.00
13SBLA120ST-13ARR	120V Super Bright Amber LED w/Screw Terminal and Amber Round Lens	$26.00

IT'S EASY TO BUILD YOUR OWN LEGEND PLATE

Simply pick the code number from each of the sections below and combine them to build your part number.

Legend Plates

_____ _____ – _____ – _____
I II III IV

All legend plates are a 2-ply laminated plastic, laser engraved for a permanent and quality appearance. Uppercase is standard unless specified.

I. LEGEND PLATE TYPE

CODE	DESCRIPTION	LIST
13MLLP	Standard 2"h x 2"w	$5.80
13MLLPH	Horizontal 1"h x 2"w	$5.80
13MLLPV	Vertical 2"h x 1"w	$5.80

Legend plates feature 4 lines of text with approximately 7 characters per line.

II. FACE AND LETTER COLOR

CODE	FACE COLOR	LETTER COLOR
AL	Aluminum	Black
(Blank)	Black	White
BE	Blue	White
GN	Green	White
RD	Red	White
WE	White	Black
YW	Yellow	Black

III. LEGEND DESIGNATION

CODE	DESCRIPTION
00	(BLANK)
01	AUTO
02	CLOSE
26	MOTOR RUN
12	OFF
13	ON
14	OPEN
27	OVERLOAD
15	POWER OFF
16	POWER ON
18	RESET
20	RUN
24	TEST
29	TRIP

IV. ADHESIVE BACK

CODE	DESCRIPTION
(Blank)	No Adhesive Back
A	Adhesive Back

NOT FINDING WHAT YOU NEED IN A STANDARD PLATE?

We offer Special and Custom Engraving up to 12" x 24" (304.8mm x 609.6mm). Consult factory or see page 7 for details.

While our standard legend plates are available for same day shipping, our special and custom legend plates are not.

DISCOUNT SCHEDULE E

CLAMP RING WRENCH

To simplify tightening and loosening of standard clamp rings. Also recommended for installing unassembled lenses. It will not scratch your lens or panel.

CODE	DESCRIPTION	LIST
13CRW	13mm Clamp Ring Wrench	$16.00

DRESS RING/PANEL GASKET

Our 5/8" panel gasket accommodates 5/8" - 21/32" (15.9mm - 16.7mm) mounting hole dimensions. NOTE: All 13mm c3controls products come standard with a 1/2" (13mm) gasket to accommodate 9/16" (12.7mm - 14.3mm) mounting hole dimensions.

CODE	DESCRIPTION	LIST
13PG5/8	5/8" (15.9mm) Panel Gasket	$ 2.00

IP20 TERMINAL GUARD

Our IP20 terminal guard protects against accidental contact with live parts and can be ordered separately as an accessory or factory installed providing the convenience of a single catalog number.

CODE	FOR USE WITH	LIST
13IP20	13mm Light Modules with Screw Terminals	$ 4.00

DISCOUNT SCHEDULE E

IT'S EASY TO BUILD YOUR OWN LEGEND PLATE

Simply pick the code number from each of the sections below and combine them to build your part number.

Special Legend Plates

_____ _____ – SP – _____
I II III IV

All legend plates are a 2-ply laminated plastic, laser engraved for a permanent and quality appearance. Uppercase is standard unless specified.

I. LEGEND PLATE TYPE

CODE	DESCRIPTION	LIST
13MLLP	Standard 2"h x 2"w	$ 5.80
13MLLPH	Horizontal 1"h x 2"w	$ 5.80
13MLLPV	Vertical 2"h x 1"w	$ 5.80

Legend plates feature 4 lines of text with approximately 7 characters per line.

II. FACE AND LETTER COLOR

CODE	FACE COLOR	LETTER COLOR
AL	Aluminum	Black
(Blank)	Black	White
BE	Blue	White
GN	Green	White
RD	Red	White
WE	White	Black
YW	Yellow	Black

III. LEGEND DESIGNATION

CODE	DESCRIPTION	LIST
SP	Special Legend	$14.00

IV. ADHESIVE BACK

CODE	DESCRIPTION
(Blank)	No Adhesive Back
A	Adhesive Back

DISCOUNT SCHEDULE **E**

Upon receipt of your order, legend plates will be set-up as specified and a proof will be sent to you prior to production to ensure accuracy.

To order, submit your drawing to:

Mail: c3controls
Attn: Customer First
PO Box 496
Beaver, PA 15009

Fax: 724.775.5283

Email: legendplates@c3controls.com

To help simplify your order process, templates are available by calling our factory at 724.775.7926 or reference one of the drawings shown on page 10.

Special legend plates are not available for same day shipping.

(Sample custom plate)

Custom Legend Plates

- ***Add your Corporate Logo!*** Send us your corporate logo electronically to promote your company image in a clean professional legend plate.
- Available in 2-ply 12" x 24" (304.8mm x 609.6mm) sheets of laminated plastic for custom laser engraving.
- To order, specify part number 13MLLP-CP (no adhesive back) or 13MLLP-CP-A (adhesive back).
- Initial Set-Up Fee Per Legend Plate: $50/hour (minimum fee $50.00).
- $2.00/Square Inch (minimum $18.00).
- Design services available. Consult factory for details and hourly rate.
- Custom legend plates are not available for same-day shipping.

To order, submit your drawing to:

Mail: c3controls
Attn: Customer First
PO Box 496
Beaver, PA 15009

Fax: 724.775.5283

Email: legendplates@c3controls.com

Specifications:

13MM INDICATING LIGHTS							
	UNITS						
ELECTRICAL RATINGS							
		Lamp Type	Rated Volts	Lumens (MSCD)	Design Life (Hrs.)	Current Draw (mA)	Shock & Vibration
		LED	6V	Very Bright. Varies w/ Color 2000 mcd	100,000	20-50	Excellent
			12V			20-30	
			24V			25	
			120V			12	
			240V			25	
LED voltage tolerance is +/- 10%							
DIELECTRIC STRENGTH (TERMINAL TO GROUND)		1960V for 1 Minute					
ENVIRONMENTAL RATINGS							
Operators		Rated and Certified for use in Type 1, 2, 3, 3R, 4/4X, 12 & 13 and IP20					
Operating Temperature	°F / °C	-40 to +131 / -40 to +55					
Storage Temperature	°F / °C	-40 to +185 / -40 to +85					
TERMINAL & WIRING CONSIDERATION (SCREW TERMINATION)							
AWG Conductor		22-12 CU (Copper Only)					
Solid Strand Conductor*	mm^2	.5 ~ 4					
Fine Strand Conductor*	mm^2	.5 ~ 4					
Recommended Torque	Lb-in.	7 (+3.0/-0.0)					
	Nm	.8					
*One or Two wires permitted per termination							
MATERIALS							
Operator Housings		Thermoplastic Polyester and Polyester Blends - (UV Stabilized for outdoor use)					
Structural Parts		Thermoplastic Polyester and Polyester Blends - (UV Stabilized for outdoor use)					
Terminal Supports		Thermoplastic Polyester and Polyester Blends - (UV Stabilized for outdoor use)					
Pilot Light Lens		High Impact Polycarbonate - (UV Stabilized for outdoor use)					
Seals		Thermoplastic - Elastomer Molded Seals					
Terminations		Brass (Not Plated Brass)					
Terminal Screws		Plated Steel - Self Lifting Clamps					
ROHS COMPLIANCE		For RoHS compliance documentation by product, refer to www.c3controls.com.					

LED WIRE LEAD INDICATING LIGHT

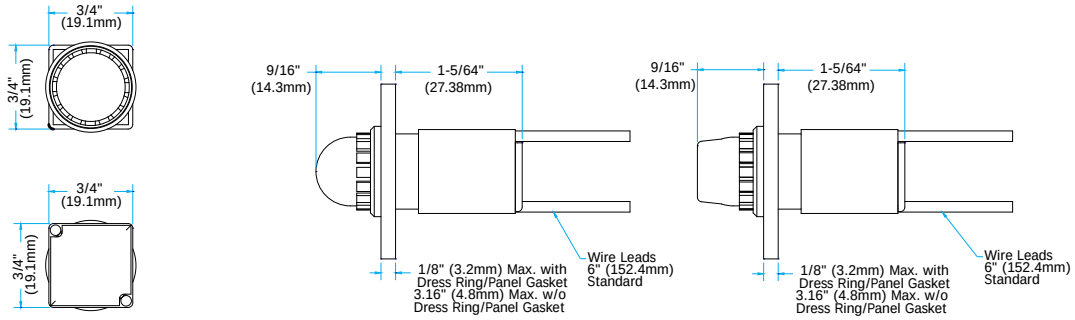

LED TERMINAL SCREW INDICATING LIGHT

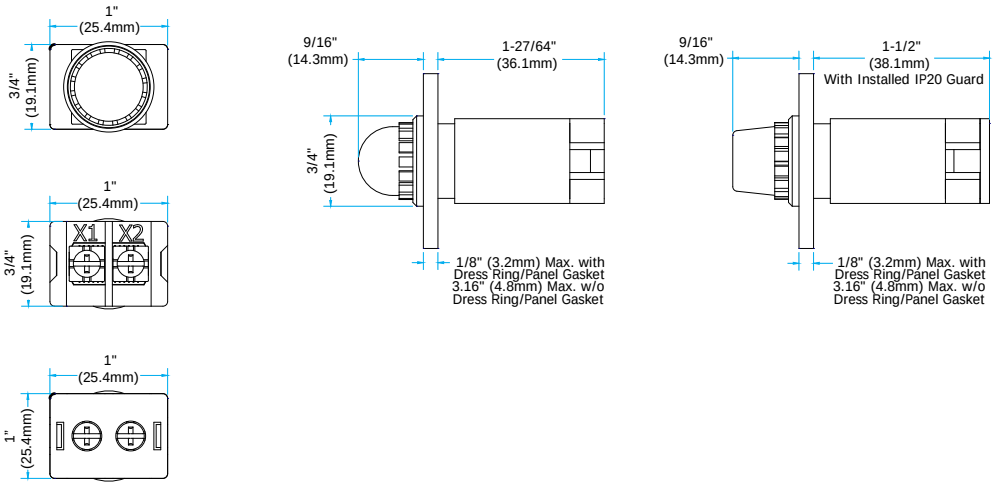

LEGEND PLATES

Standard 2" x 2"
(13MLLP)

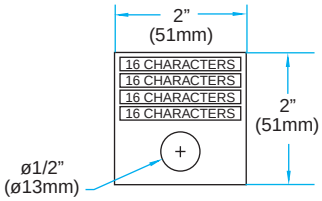

Horizontal 1" x 2"
(13MLLPH)

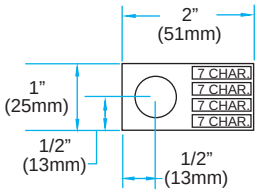

Vertical 2" x 1"
(13MLLPV)

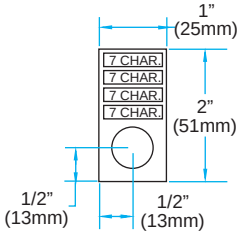

MOUNTING HOLE PATTERN

For Wire Lead Indicating Light

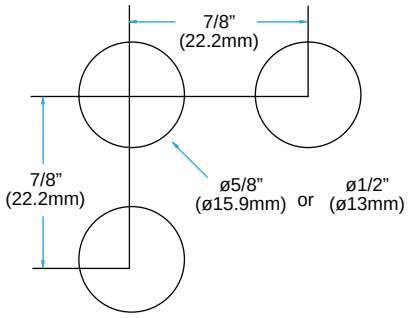

For Screw Indicating Light

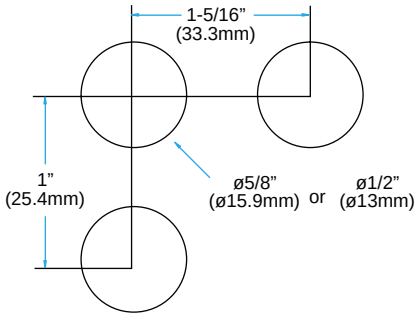

VISIT WWW.C3CONTROLS.COM TO DOWNLOAD CAD DRAWINGS

CONTROL STATION ENCLOSURES

We offer an impressive line of enclosures in three different constructions: polyester, polycarbonate, and die-cast aluminum. We also offer custom control stations that can be configured and assembled to meet your particular needs.

Section 21

Polyester	4
Polycarbonate	6
Die Cast Aluminum	9
Custom Control Stations	11

PROVEN

c UL us LISTED

Conformity to Standards:
UL 50
CSA C22.2 No. 94
IEC 60529

Certifications:
UL File #: E470986
CSA Certified
CE Marked (per EU Low Voltage Directive 2014/35/EC and RoHS Directive 2011/65/EU)

Visit c3controls.com to download product certifications.

NOTE: The scope (range, description, price, specifications, dimensions, etc.) of the product featured in this section is subject to change without notice. Refer to www.c3controls.com for product updates.
REVISION 10.2024

CONTROL STATION ENCLOSURES

All our products are fully certified, rated, and backed by our 36-month warranty to meet the needs of the machine builder, and our Series EC Control Station Enclosures are no exception. Check out the incredible features in the chart below!

DELIVERING SUPERIOR PRODUCT QUALITY AND MANUFACTURING EXCELLENCE

✓ **Proven**	Our enclosures meet UL, CSA and IEC standards requirements.
✓ **Durable Construction**	Available in polyester, polycarbonate, and die-cast aluminum in a variety of ranges.
✓ **Standard Control Stations**	Our most popular control stations are available as standard in five sizes and up to three units—guaranteed for same-day shipping.
✓ **Custom Control Stations**	Specify your needs, and c3controls will configure, assemble and ship it as a single unit.
✓ **Flexibility**	We offer the flexibility of standard assembled control stations with 30mm and 22mm pilot devices as well as enclosed motor control assemblies, enclosed disconnect switches and enclosed motor protection circuit breakers. You can also order an enclosure with up to four holes you'll assemble yourself.
✓ **Easy to Install**	Fully assembled and ready to use out of the box.
✓ **General Use**	We've designed our polyester control stations for common electrical and electronic applications.
✓ **Modular Design**	Our 30mm and 22mm pilot devices' interchangeable modular design provides endless options for operator interface—reducing inventory.
✓ **Environmentally Secure**	A variety of seals keep dust and moisture out of our enclosures.
✓ **36-Month Warranty***	Every product is backed by our 36-Month Warranty—giving you confidence in the quality, reliability, and performance of components designed for the most demanding applications.
✓ **Guaranteed Availability***	Any order for standard catalog items received by 6:00pm ET is guaranteed to ship same-day. NOTE: Custom Control Stations and Enclosed Motor Control assemblies are not available for guaranteed same-day shipping.
✓ **Advantage Pricing**	Our approach to product development, manufacturing, and focus on servicing the OEM and Electrical Equipment Builder reduces cost. The result—the best value in the industry.

*See c3controls Terms & Conditions

> *c3controls offers a point of differentiation providing desirable and reliable products that meet a price point affording us a competitive advantage to stay ahead of the game.*
>
> Scott Morasch, President • **Isaacs & Associates, Inc.**

Polyester

Polycarbonate

Die-Cast Aluminum

UNIQUE PRODUCT LINE FEATURES

ENCLOSURES

Available in polyester, polycarbonate, and die cast aluminum—all with durable construction and guaranteed for same-day shipping.

STANDARD CONTROL STATIONS

One unit Emergency Stop red mushroom push button and two unit red and green push button control stations are available for guaranteed same-day shipping.

CUSTOM CONTROL STATIONS

Configure custom control stations in a variety of sizes and materials and we'll assemble it for you. Call for details. Note: Not available for guaranteed same-day shipping.

FIND IT FAST

Control Station Enclosures

- Certifications
- Specifications
- Dimension Drawings
- Installation Instructions
- Easy to Buy

c3controls.com

POLYESTER ENCLOSURES AND CONTROL STATIONS

NOTE: Design subject to change without notice.
Consult factory for current list price and dimensions.

DISCOUNT SCHEDULE **H**

Construction

- Available for 30mm and 22mm pilot devices.
- Solid fiberglass reinforced polyester construction, lightweight with high impact resistance.
- Non-conductive double insulated material.
- Formed-In-Place (FIP) continuous polyurethane gasket that provides a complete watertight, dust tight environmental seal.
- Recessed captive 316 Series stainless steel cover screws.
- Designed for general electrical and electronic applications and any application that has an associated environmental concern.
- Soft edge design reduces dust and other particle corrosion.
- Watertight, non corrosive, environmental design.
- UV and chemical resistant.
- Punched enclosures feature notched keyholes for both 30mm and 22mm styles.
- Standard color: RAL 7035
- Our standard enclosures featured on this page are available for guaranteed same-day shipping, our custom control stations and enclosed motor control assemblies are not.
- Available as fully-assembled control stations.

Ratings / Approvals

- Type 1, 2, 3, 3R, 4X, 12, 13, and IP66
- RoHS Compliant

30MM POLYESTER ENCLOSURES AND CONTROL STATIONS

CODE	# OF UNITS	FRAME DIMENSIONS (H x W x D)	COLOR	LIST
CS1	1	6-5/8″ x 3-13/16″ x 3-29/32″ (168mm x 96.8mm x 99.3mm)	RAL 7035	$133.00
CS2	2	6-5/8″ x 3-13/16″ x 3-29/32″ (168mm x 96.8mm x 99.3mm)	RAL 7035	$137.00
CS3	3	8-7/8″ x 3-13/16″ x 3-29/32″ (225.4mm x 96.8mm x 99.3mm)	RAL 7035	$145.00

22MM POLYESTER ENCLOSURES AND CONTROL STATIONS

CODE	# OF UNITS	FRAME DIMENSIONS (H x W x D)	COLOR	LIST
22CS1	1	6-5/8″ x 3-13/16″ x 3-29/32″ (168mm x 96.8mm x 99.3mm)	RAL 7035	$133.00
22CS2	2	6-5/8″ x 3-13/16″ x 3-29/32″ (168mm x 96.8mm x 99.3mm)	RAL 7035	$137.00
22CS3	3	6-5/8″ x 3-13/16″ x 3-29/32″ (168mm x 96.8mm x 99.3mm)	RAL 7035	$145.00
22CS4	4	8-7/8″ x 3-13/16″ x 3-29/32″ (225.4mm x 96.8mm x 99.3mm)	RAL 7035	$165.00

NOTE: Mounting feet available, consult factory.

30MM POLYESTER ENCLOSURES AND CONTROL STATIONS

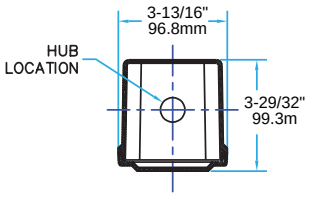

CS1

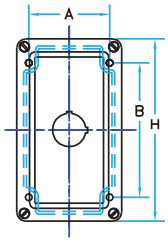

CS2

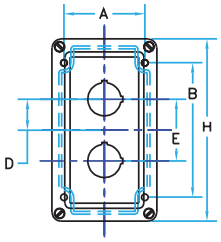

CS3

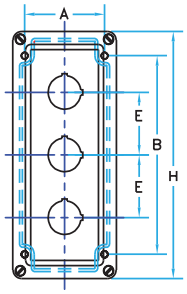

- Spacing designed to accompany standard, short and tall legend plates.
- All operator holes are 1-3/16" (30.16mm) diameter.
- See hub chart below for drilled hole sizes. All hub holes are centered on bottom face of custom enclosures unless otherwise specified.
- Polyester enclosure depth accommodates two 30mm contact blocks deep for a total of four circuits.
- When using a mechanical interlock, enclosure must be ordered with 2" (50.8mm) centers. Consult factory.

30MM POLYESTER HUB HOLE SIZE

CONDUIT SIZE	DRILL HOLE SIZE
1/2" (12.7mm)	7/8" (22.5mm)
3/4" (19.1mm)	1-1/16" (57.2mm)
1" (25.4mm)	1-5/16" (33.3mm)

30MM POLYESTER ENCLOSURE AND CONTROL STATION SIZES & HOLE LOCATIONS

PART #	H	A	B	D	E
CS1	6-5/8" (168mm)	2-15/16" (74.6mm)	4-7/8" (123.8mm)	—	—
CS2	6-5/8" (168mm)	2-15/16" (74.6mm)	4-7/8" (123.8mm)	1-1/8" (28.5mm)	2-1/4" (57.2mm)
CS3	8-7/8" (225.4mm)	2-15/16" (74.6mm)	7-1/8" (181mm)	—	2-1/4" (57.2mm)

22MM POLYESTER ENCLOSURES AND CONTROL STATIONS

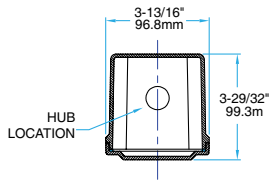

22CS1

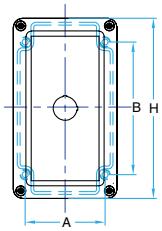

22CS2

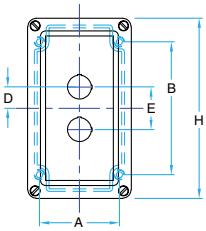

22CS3

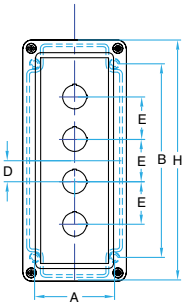

22CS4

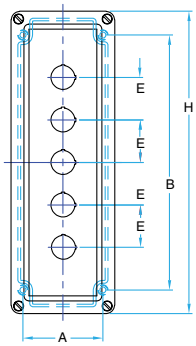

22MM POLYESTER ENCLOSURE AND CONTROL STATION SIZES & HOLE LOCATIONS

PART #	H	A	B	D	E
22CS1	6-5/8" (168mm)	2-15/16" (74.6mm)	4-7/8" (123.8mm)	—	—
22CS2	6-5/8" (168mm)	2-15/16" (74.6mm)	4-7/8" (123.8mm)	25/32" (19.8mm)	1-9/16" (39.6mm)
22CS3	6-5/8" (168mm)	2-15/16" (74.6mm)	4-7/8" (123.8mm)	—	1-9/16" (39.6mm)
22CS4	8-7/8" (225.5mm)	2-15/16" (74.6mm)	7-1/8" (181mm)	25/32" (19.8mm)	1-9/16" (39.6mm)

22MM POLYESTER HUB SIZE

See 30mm Polyester Hub Hole Size chart above for conduit and drill hole size.

- Spacing designed to accompany short legend plates. Consult the factory for standard, tall, jumbo and special legend plate options.
- All operator holes are 7/8" (22.5mm) diameter.
- See hub chart on left for drilled hole sizes. All hub holes are centered on bottom face of custom enclosures unless otherwise specified.
- Polyester enclosure depth accommodates three 22mm IEC contact blocks deep.
- When using a mechanical interlock (22mm NEMA only), enclosure must be ordered with 2" (50.8mm) centers. Consult factory.

POLYCARBONATE ENCLOSURES AND CONTROL STATIONS

DISCOUNT SCHEDULE **H**

Construction

- Available for 30mm and 22mm pilot devices, and disconnect switches.
- Rugged polycarbonate construction, high quality and sealed.
- High temperature neoprene gasket.
- Highly efficient seal provides ingress protection against dust and moistures.
- For greater mechanical protection, the cover gasket is housed in a recess in the lid which mates up with a tongue.
- Standard quarter turn quick release lid fixings.
- Oil and corrosion resistant.
- Standard color: Light Grey

- Our standard enclosures featured on this page are available for guaranteed same-day shipping, our custom control stations and enclosed motor control assemblies are not.

Ratings / Approvals

- Type 1, 4/4X, 12 and IP65
- IP65 protection for watertight and dust-tight construction
- Application Temperature Range: -40°C to 80°C (-40°F to 176°F)

NOTE: Design subject to change without notice. Consult factory for current list price and dimensions.

30MM POLYCARBONATE STANDARD ENCLOSURES (NOT RECOMMENDED FOR H-LINE)

CODE	# OF UNITS	LIST
PC1	1	$ 76.00
PC2	2	$ 80.00
PC3	3	$104.00

22MM POLYCARBONATE STANDARD ENCLOSURES

CODE	# OF UNITS	LIST
22PC1	1	$ 76.00
22PC2	2	$ 80.00
22PC3	3	$104.00

DISCONNECTS POLYCARBONATE STANDARD ENCLOSURES

CODE	# OF UNITS	LIST
PCDSEN	Up to 3 Poles	$ 64.00
PCDSEN45	Up to 5 Poles	$104.00

30MM POLYCARBONATE ENCLOSURES AND CONTROL STATIONS

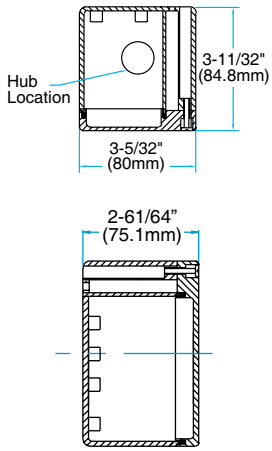

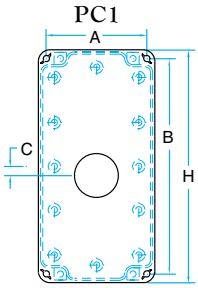

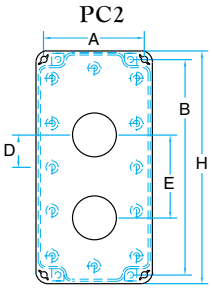

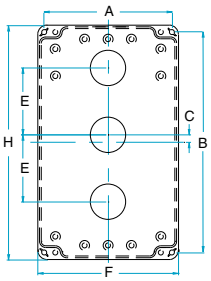

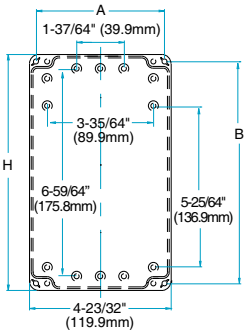

30MM POLYCARBONATE HUB HOLE SIZE

See 30mm Polyester Hub Hole Size chart on page 5 for conduit and drill hole size.

NOTE: Our PC3 can not be used with a 1" (25.4mm) hub.

- Spacing designed to accompany standard, short and tall legend plates.
- All operator holes are 1-3/16" (30.2mm) diameter.
- See hub chart for drilled hole sizes. All hub holes are centered on bottom face of custom enclosures unless otherwise specified.
- When using a mechanical interlock, enclosure must be ordered with 2" (50.8mm) centers. Consult factory.

30MM POLYCARBONATE ENCLOSURE AND CONTROL STATION SIZES & HOLE LOCATIONS

PART #	H	A	B	C	D	E	F
PC1	6-19/64" (160mm)	2-23/32" (69.1mm)	5-53/64" (148.1mm)	1/4" (6.4mm)	—	—	—
PC2	6-19/64" (160mm)	2-23/32" (69.1mm)	5-53/64" (148.1mm)	—	7/8" (22.2mm)	2-1/4" (57.2mm)	—
PC3	7-7/8" (200.2mm)	4-19/64" (109.2mm)	7-13/33" (188.2mm)	1/4" (6.4mm)	—	2-1/4" (57.2mm)	4-47/64" (120.1mm)

22MM POLYCARBONATE ENCLOSURES AND CONTROL STATIONS

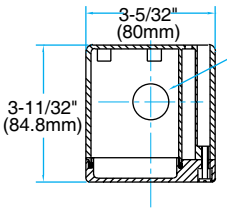

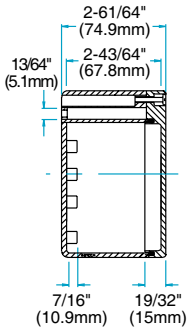

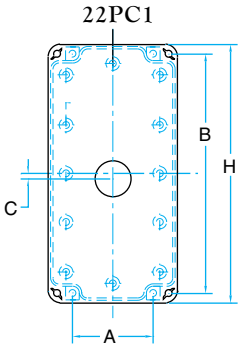

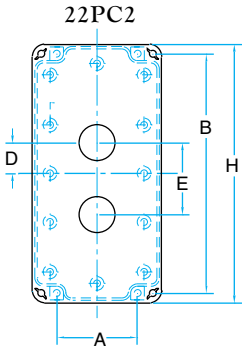

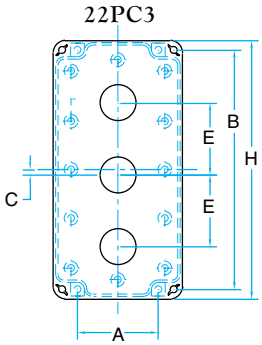

22MM POLYCARBONATE HUB HOLE SIZE

See 22mm Polyester Hub Hole Size chart on page 5 for conduit size and drill hole size.

- Spacing designed to accompany standard and short legend plates, consult the factory for tall, jumbo and special legend plate options.
- All operator holes are 7/8" (22.5mm) diameter.
- See hub chart for drilled hole sizes. All hub holes are centered on bottom face of custom enclosures unless otherwise specified.
- Polycarbonate enclosure depth accommodates one 22mm IEC contact block deep when using a 22mm IEC selector switch or two 22mm IEC contact blocks deep with all other 22mm IEC pilot devices. 22mm NEMA pilot devices may use up to three contact blocks deep.
- When using a NEMA mechanical interlock, enclosure must be ordered with 2" (50.8mm) centers. Consult factory.

22MM POLYCARBONATE ENCLOSURE AND CONTROL STATION SIZES & HOLE LOCATIONS

PART #	H	A	B	C	D	E
22PC1	6-19/64" (160mm)	1-31/32" (50mm)	5-53/64" (148.1mm)	1/8" (3.2mm)	—	—
22PC2	6-19/64" (160mm)	1-31/32" (50mm)	5-53/64" (148.1mm)	—	3/4" (19.1mm)	1-3/4" (44.4mm)
22PC3	6-19/64" (160mm)	1-31/32" (50mm)	5-53/64" (148.1mm)	1/8" (3.2mm)	—	1-3/4" (44.4mm)

DISCONNECT POLYCARBONATE ENCLOSURES AND CONTROL STATIONS

PCDSEN

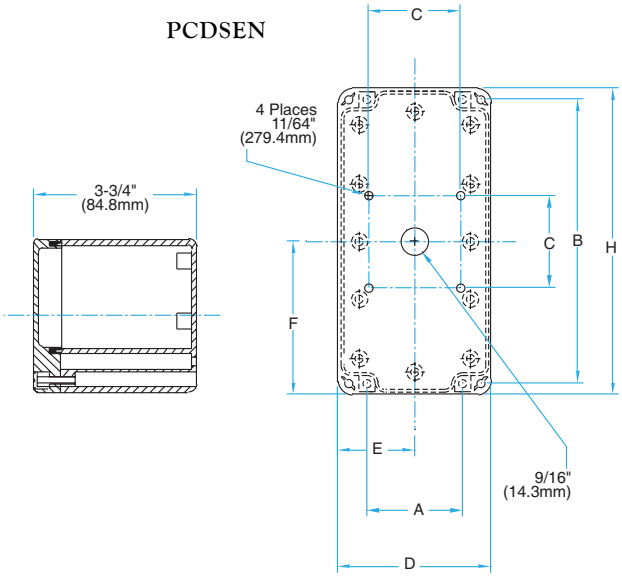

PCDSEN45

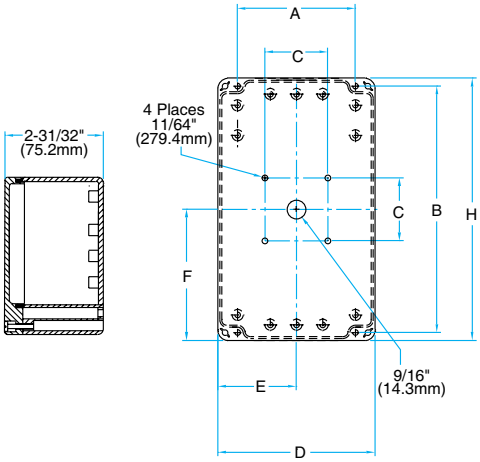

- See hub chart for drilled hole sizes. All hub holes are centered on bottom face of custom enclosures unless otherwise specified.

DISCONNECT POLYCARBONATE HUB HOLE SIZE

See 30mm Polyester Hub Hole Size chart on page 5 for conduit size and drill hole size.

NOTE: Our PCDSEN45 cannot be used with a 1" (25.4mm) hub.

DISCONNECT POLYCARBONATE ENCLOSURE AND CONTROL STATION SIZES & HOLE LOCATIONS

PART #	H	A	B	C	D	E	F
PCDSEN	6-19/64" (160mm)	1-31/32" (50mm)	5-53/64" (148.1mm)	1-27/64" (36mm)	3-5/32" (80mm)	1-37/64" (40.1mm)	3-5/32" (80mm)
PCDSEN45	7-7/8" (200.2mm)	3-35/64" (90.2mm)	7-13/32" (187.9mm)	1-27/64" (36mm)	4-47/64" (120.1mm)	2-23/64" (59.9mm)	3-15/16" (100.1mm)

DIE CAST ALUMINUM ENCLOSURES AND CONTROL STATIONS

DISCOUNT SCHEDULE **H**

NOTE: Design subject to change without notice. Consult factory for current list price and dimensions.

Construction

- Available for 30mm and 22mm pilot devices.
- Die cast aluminum alloy construction.
- High temperature neoprene gaskets are oil and petroleum resistant.
- Highly efficient seal provides ingress protection against dust and moistures.
- For greater mechanical protection, the cover gasket is housed in a recess in the lid which mates up with a tongue.
- Oil and corrosion resistant.
- Stainless steel captive lid retaining screws.
- Standard finish: Smooth powder coat Grey (RAL 7001).
- Our standard enclosures featured on this page are available for guaranteed same-day shipping, our custom control stations and enclosed motor control assemblies are not.

Ratings / Approvals

- Type 1, 3R, 4, 12, IP66 and IP67
- IP66 protection with a working temperature within -40°C to +90°C (-40°F to 194°F)

30MM DIE CAST ALUMINUM STANDARD ENCLOSURES (NOT RECOMMENDED FOR H-LINE)

CODE	# OF UNITS	FRAME DIMENSIONS (H x W x D)	COLOR	LIST
DC1	1	4-59/64" x 3-5/32" x 2-9/32" (125mm x 80mm x 57.9mm)	Smooth Powder Coat Grey	$130.00
DC2	2	6-7/8" x 3-5/32" x 2-9/32" (174.75mm x 80mm x 57.91mm)	Smooth Powder Coat Grey	$150.00
DC3	3	9-13/16" x 3-5/32" x 2-3/64" (249.2mm x 80mm x 52mm)	Smooth Powder Coat Grey	$190.00

22MM DIE CAST ALUMINUM STANDARD ENCLOSURES)

CODE	# OF UNITS	FRAME DIMENSIONS (H x W x D)	COLOR	LIST
22DC1	1	4-59/64" x 3-5/32" x 2-9/32" (125mm x 80mm x 57.9mm)	Smooth Powder Coat Grey	$130.00
22DC2	2	4-59/64" x 3-5/32" x 2-9/32" (125mm x 80mm x 57.9mm)	Smooth Powder Coat Grey	$150.00
22DC3	3	6-5/8" x 3-5/32" x 2-9/32" (168.4mm x 80mm x 57.9mm)	Smooth Powder Coat Grey	$190.00

30MM DIE CAST ALUMINUM ENCLOSURES AND CONTROL STATIONS

- Spacing designed to accompany standard, short and tall legend plates.
- All operator holes are 1-3/16" (30.2mm) diameter.
- See hub chart below for drilled hole sizes. All hub holes are centered on bottom face of custom enclosures unless otherwise specified.
- Die cast enclosure depth accommodates one contact block.
- When using a mechanical interlock, enclosure must be ordered with 2" (50.8mm) centers. Consult factory.

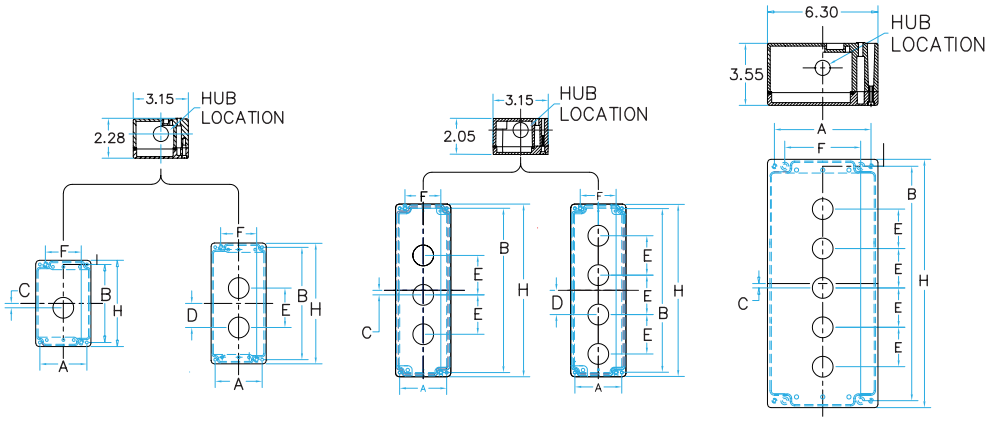

30MM DIE CAST HUB HOLE SIZE

CONDUIT SIZE	DRILL HOLE SIZE
1/2" (12.7mm)	7/8" (22.5mm)

30MM DIE CAST ENCLOSURE AND CONTROL STATION SIZES & HOLE LOCATIONS

PART #	H	A	B	C	D	E	F
DC1	4-59/64" (125mm)	2-11/16" (68.1mm)	4-29/64" (113mm)	1/4" (6.35mm)	—	—	2-3/64" (52mm)
DC2	6-7/8" (174.75mm)	2-11/16" (68.1mm)	6-13/32" (162.8mm)	—	1-3/8" (34.9mm)	2-1/4" (57.2mm)	2-3/64" (52mm)
DC3	9-13/16" (249.2mm)	2-11/16" (68.1mm)	9-11/32" (237mm)	1/4" (6.35mm)	—	2-1/4" (57.2mm)	2-3/64" (52mm)

22MM NEMA DIE CAST ALUMINUM ENCLOSURES AND CONTROL STATIONS

- Spacing designed to accompany standard and short legend plates, consult the factory for tall, jumbo and special legend plate options.
- All operator holes are 7/8" (22.5mm) diameter.
- See hub chart below for drilled hole sizes. All hub holes are centered on bottom face of custom enclosures unless otherwise specified.
- 3/4" (19.1mm) and 1" (25.4mm) hubs not available, consult factory for options.
- When using a mechanical interlock, enclosure must be ordered with 2" (50.8mm) centers. Consult factory.

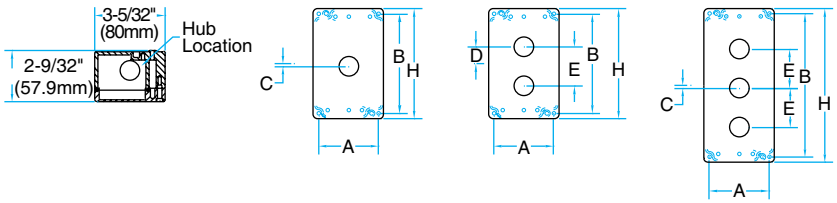

22MM DIE CAST HUB HOLE SIZE

CONDUIT SIZE	DRILL HOLE SIZE
1/2" (12.7mm)	7/8" (22.5mm)

22MM DIE CAST ENCLOSURE AND CONTROL STATION SIZES & HOLE LOCATIONS

PART #	H	A	B	C	D	E
22DC1	4-59/64" (125mm)	2-11/16" (68.1mm)	4-29/64" (113mm)	1/8" (3.2mm)	—	—
22DC2	4-59/64" (125mm)	2-11/16" (68.1mm)	4-29/64" (113mm)	—	3/4" (19.1mm)	1-3/4" (44.5mm)
22DC3	6-5/8" (168.4mm)	2-11/16" (68.1mm)	6-13/32" (162.8mm)	1/8" (3.2mm)	—	1-3/4" (44.5mm)

CUSTOM CONTROL STATIONS

We'll configure and assemble enclosure stations in nearly any size and from a variety of materials to your specification. Ordering a custom enclosed control station is simple and offers advantages.

You'll order your custom job under a single catalog number and your control station will arrive already assembled which means a shorter bill of material on your end, saving you installation time and cost. And pre-assembly also makes your inventory easier to manage.

There is a $4.00 assembly charge per pilot device unit.
Example: A two-unit station will have an assembly charge of $8.00.

Custom control stations are not available for guaranteed same day shipping. Call us for pricing and an estimated date of delivery.

Advantages

- ✓ **Single catalog number**
- ✓ **No assembly required**
- ✓ **Shorter panel bill of material**
- ✓ **Easier to manage inventory**

IEC TERMINAL BLOCKS

series TB iec

c3controls' line of IEC terminal blocks are both innovative and user-friendly. They are simple to install and are color-coded for easy circuit identification. From standard feed-through spring clamp or screw clamp to disconnect, fuse holder, and power distribution terminal blocks, we've got what you need.

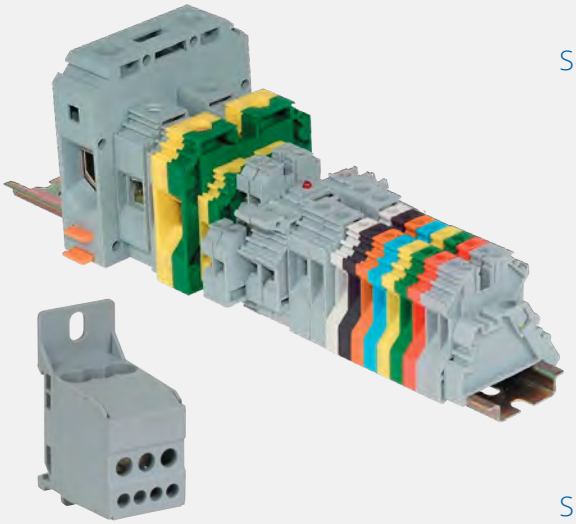

Section 22

Screw Clamp Connection
- Feed Through DIN Rail 4
- Ground DIN Rail 10
- Multi-Conductor Feed Through DIN Rail 12
- Double Level Feed Through DIN Rail 13
- Triple Level Feed Through DIN Rail 14
- Fuse Holder DIN Rail 16
- Disconnect DIN Rail 19
- Power Distribution Block - Panel and DIN Rail Mount 20
- Miniature Feed Through Panel Mount 21

Spring Clamp Connection
- Feed Through DIN Rail 22
- Ground DIN Rail 25
- Multi-Conductor Feed Through DIN Rail 27
- Miniature Feed Through Panel Mount 30

Accessories & Markers 31

Guide for Selecting Screw Driver Blade Dimensions 34

Dimensions 35

PROVEN

Conformity to Standards:
UL 1059, 486
CSA C22.2 No. 158-1987
IEC 60947-1, 60947-7-1

Certifications:
UL File #: E145984 (Guide XCFR2, XCFR8)

CE Marked (per EU Low Voltage Directive 2006/95/EC and RoHS Directive 2011/65/EU)

Visit www.c3controls.com to download product certifications.

NOTE: The scope (range, description, price, specifications, dimensions, etc.) of the product featured in this section is subject to change without notice. Refer to www.c3controls.com for product updates.

REVISION 11.2022

IEC TERMINAL BLOCKS

c3controls offers a comprehensive line of IEC Terminal Blocks, and each one of our products is designed and manufactured to meet the needs of the machine builder. Check out all the features of our Series WTB2 below!

FOR DURABLE, SIMPLE, LONG-LASTING TERMINAL BLOCKS TURN TO C3CONTROLS.	
✓ **Proven**	Our IEC terminal blocks meet UL and IEC standards requirements making them suitable for use in global applications.
✓ **Multiple Wire Sizes**	Our IEC terminal blocks accept wires as small as 0.5mm^2 (24 AWG) and as large as 120mm^2 (4/0 AWG), and up to 232 amps.
✓ **Wide Range of Operation**	A wide range of terminal blocks available from 5mm – 25mm in screw clamp, power distribution, and spring clamp, with ratings from 20A to 232A.
✓ **Vibration Resistant**	The pre-loaded 302 stainless steel spring clamps hold the wire securely against the current bar and won't loosen, even in high vibration applications.
✓ **Heavy-Duty Construction**	We mold our terminal block housings from unbreakable thermoplastic with a UL94 V-0 flammability standard, and we use quality zinc plated brass and electrolytic copper for our metal parts for excellent conductivity and to minimize corrosion.
✓ **Visible Certifications**	Our product certifications and electrical ratings are clearly marked on the outside of the terminal blocks for easy reference during installation.
✓ **Quick Identification**	Color coded blocks and terminal markers are available for easy circuit identification.
✓ **Time & Space Savings**	Internal jumpers in up to 10 positions free up valuable wiring space and reduce assembly time.
✓ **36-Month Warranty***	Every product is backed by our 36-Month Warranty—giving you confidence in the quality, reliability, and performance of components designed for the most demanding applications.
✓ **Guaranteed Same-Day Shipping***	Product availability reduces inventory, and improves cash-flow—saving you money. With c3controls any order for standard catalog items received by 6:00pm ET is guaranteed to ship same-day.
✓ **Advantage Pricing**	Our approach to product development, manufacturing, and focus on servicing the OEM and Electrical Equipment Builder reduces cost. The result—the best value in the industry.

*See c3controls Terms & Conditions for complete details on our warranty and shipping guarantee. Same-day shipping does not apply on plotter and plotter accessories.

> *"c3controls has helped us reduce the costs on all of our control panel components. From terminal blocks, power disconnects, selector and push button switches, to motor contactors and overload relays, c3controls' products are all we use."*

Joel Fritz, President & CEO • **Pacific Kiln & Insulations, Co. Inc.**

IEC Screw Clamp Multi-Level DIN Rail

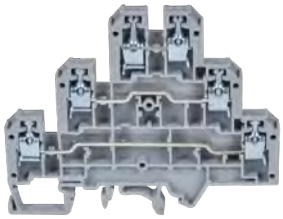

IEC Screw Clamp Power Distribution

IEC Spring Clamp Ground DIN Rail

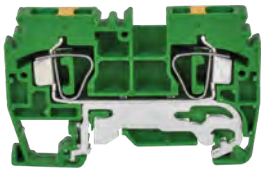

IEC Spring Clamp Multi-Conductor Feed Through DIN Rail

UNIQUE PRODUCT LINE FEATURES

SECURITY

Our snap-on, rugged DIN rail mounting foot is designed to easily attach terminal blocks while creating a secure fit.

SAFETY

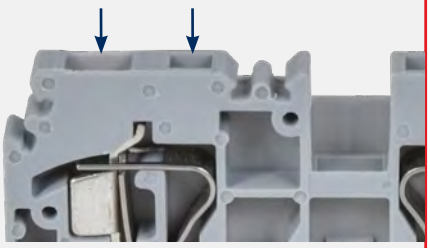

All c3controls terminal blocks come with IP20 protection against accidental contact and have a UL94 V-0 flammability rating.

STABILITY

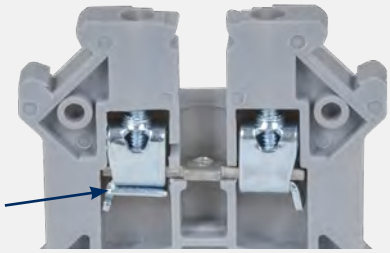

Our screw clamp terminal blocks feature a vibration resistant zinc plated clamping system.

WIRING MADE EASY

The funnel entry design of our terminal blocks makes wiring easy and our spring clamp features top wiring.

CIRCUIT IDENTIFICATION

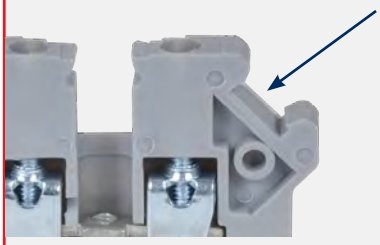

Marking system allows for fast and easy circuit identification. Blank, custom, and standard markers are available.

RECESSED TERMINAL SCREWS

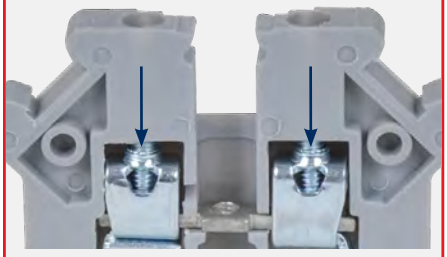

Captive terminal screws are recessed to avoid accidental contact and will not fall out during wiring.

FIND IT FAST

IEC Terminal Blocks

- Certifications
- Specifications
- Dimension Drawings
- Installation Instructions
- Easy To Buy

www.c3controls.com

IEC FEED THROUGH DIN RAIL TERMINAL BLOCKS

See bottom of page 5 for color options.

DISCOUNT SCHEDULE G

5mm (3/16") Width

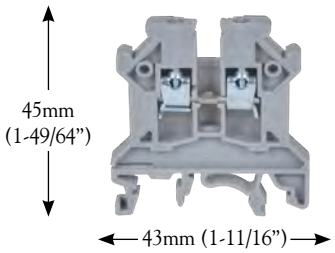

6mm (15/64") Width

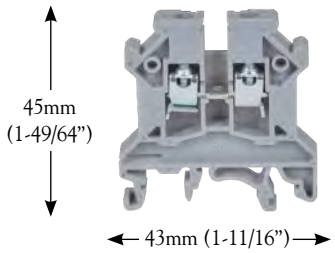

	WTB2-W2			WTB2-W4		
SPECIFICATIONS	**SINGLE-CIRCUIT TERMINAL BLOCK**			**SINGLE-CIRCUIT TERMINAL BLOCK**		
Certifications	UL 1059 File #: E145984	IEC 60947-7-1		UL 1059 File #: E145984	IEC 60947-7-1	
Voltage Rating (V)	600	750		600	750	
Maximum Current (A)	25	24		35	32	
WIRE RANGE						
Solid Strand Conductor mm²	0.5 - 4			0.5 - 6		
Fine Strand Conductor mm²	0.5 - 2.5			0.5 - 4		
AWG Conductor	22 - 12			22 - 10	—	
Wire Strip Length (mm/inches)	9 / 0.35			9 / 0.35		
Tightening Torque (for Terminal Block) (Nm/Lb-in)	0.4 / 7			0.5 / 7		
Tightening Torque (for Circuit Bridge) (Nm/Lb-in)	0.2 / 1.77			0.2 / 1.77		
OPERATING TEMPERATURE						
Operating Temperature	-20 to +80° C (-4 to +176° F)			-20 to +80° C (-4 to +176° F)		
ROHS COMPLIANCE	For RoHS compliance documentation by product, refer to www.c3controls.com					
TERMINAL BLOCKS	**CAT. NO.**	**PCS./PKG.**	**LIST/PC.**	**CAT. NO.**	**PCS./PKG.**	**LIST/PC.**
(Standard) Grey	WTB2-W2	100	$ 0.76	WTB2-W4	100	$ 0.90
Black	WTB2-W2-BK	100	$ 0.86	WTB2-W4-BK	100	$ 1.00
Blue	WTB2-W2-BE	100	$ 0.86	WTB2-W4-BE	100	$ 1.00
Green	WTB2-W2-GN	100	$ 0.86	WTB2-W4-GN	100	$ 1.00
Orange	WTB2-W2-OR	100	$ 0.86	WTB2-W4-OR	100	$ 1.00
Red	WTB2-W2-RD	100	$ 0.86	WTB2-W4-RD	100	$ 1.00
White	WTB2-W2-WH	100	$ 0.86	WTB2-W4-WH	100	$ 1.00
Yellow	WTB2-W2-YW	100	$ 0.86	WTB2-W4-YW	100	$ 1.00
ACCESSORIES (see pages 31-32)	**CAT. NO.**	**PCS./PKG.**	**LIST/PC.**	**CAT. NO.**	**PCS./PKG.**	**LIST/PC.**
End Barrier						
Grey, Non-Metallic (Installs on 35mm DIN Rail)	WTB2-EB	50	$ 1.50	WTB2-EB	50	$ 1.50
Grey, Non-Metallic (Installs on 32mm and 35mm DIN Rail)	WTB2-EB2	50	$ 1.50	WTB2-EB2	50	$ 1.50
Steel (Installs on 35mm DIN Rail)	WTB2-EB3	50	$ 1.50	WTB2-EB3	50	$ 1.50
Circuit Bridge						
2 Position	WTB2-W2/2CB	10	$ 1.10	WTB2-W4/2CB	10	$ 2.20
3 Position	WTB2-W2/3CB	10	$ 1.60	WTB2-W4/3CB	10	$ 3.20
4 Position	WTB2-W2/4CB	10	$ 2.60	WTB2-W4/4CB	10	$ 4.20
10 Position	WTB2-W2/10CB	10	$ 5.20	WTB2-W4/10CB	10	$ 9.80
End Plate	WTB2-EPW2/4	50	$ 0.50	WTB2-EPW2/4	50	$ 0.50
Separator Plate	WTB2-AD2/4	50	$ 0.55	WTB2-AD2/4	50	$ 0.55
Partition Plate	WTB2-PPW2/4	50	$ 0.55	WTB2-PPW2/4	50	$ 0.55
Marker	WTB2-M5	100	$ 0.07	WTB2-M6	100	$ 0.07
Group Markers (see page31)						
Plated Steel Mounting Rail, DIN						
35mm x 7.5mm - Slotted - 1 Meter	DRMR3	1	$ 9.70	DRMR3	1	$ 9.70
35mm x 7.5mm - Slotted - 2 Meters	DRMR6	10	$19.20	DRMR6	10	$19.20
35mm x 15mm - Slotted - 1 Meter	DRMR3D	1	$14.40	DRMR3D	1	$14.40
35mm x 15mm - Slotted - 2 Meters	DRMR6D	10	$27.60	DRMR6D	10	$27.60
Aluminum Mounting Rail, DIN						
35mm x 7.5mm - Slotted - 1 Meter	DRMR3A	1	$16.80	DRMR3A	1	$16.80
DIN Rail Support Bracket	WTB2-BRKT1	1	$ 1.60	WTB2-BRKT1	1	$ 1.60

IEC Feed Through DIN Rail Terminal Blocks

c3controls WTB2 Series of feed through terminal blocks have been designed to meet the strict specifications and standards of UL, CSA, and IEC. The WTB2 Series of terminal blocks is manufactured with a direct mounting foot for 32mm and 35mm standard DIN rails.

In addition to the mounting feature, the WTB2 Series is constructed using only the best available materials for both the housing and clamping bodies and parts. The housing is molded out of an unbreakable, high quality, V-0 flame resistant thermoplastic. The metal bodies are made of a high quality zinc plated, brass and electrolytic copper to provide excellent conductivity and minimize corrosion problems.

The WTB2 Series accepts wires as small as 0.5mm^2 (24 AWG) and as large as 120mm^2 (4/0 AWG), up to 232 Amps. Wiring to the terminal blocks is made easy by the funnel entry design of the housing. Accessories such as circuit bridges, end plates, partition plates, and markers make the WTB2 Series a flexible alternative to any feed through wiring or power distribution application.

SPECIAL FEATURES

c3controls manufactures the most innovative, user-friendly line of Terminal Blocks on the market today!

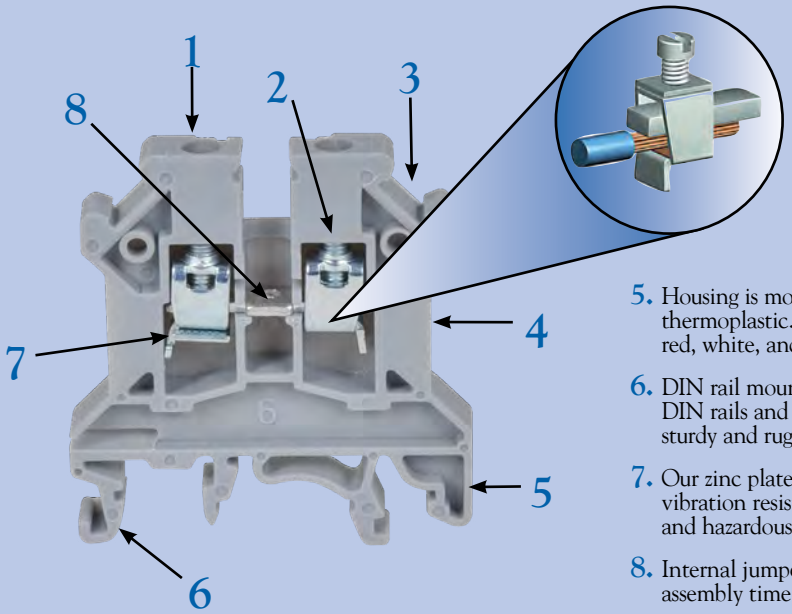

1. Construction provides IP20 protection to guard against accidental contact with live parts — even with accessories installed.
2. Captive terminal screws will not fall out during wiring and are recessed to avoid accidental contact.
3. Marking system allows for fast and easy circuit identification. Blank, custom, and standard markers are available.
4. Funneled wiring entry with finger safe IP20 terminals simplifies wiring for fast and easy installations.
5. Housing is molded out of an unbreakable, high quality, V-0 flame resistant thermoplastic. Available in eight colors; grey, black, blue, green, orange, red, white, and yellow for quick identification of control circuit types.
6. DIN rail mounting foot allows for direct mounting on 32mm and 35mm DIN rails and is designed for easy snap on, snap off assembly — the most sturdy and rugged mounting foot on the market!
7. Our zinc plated clamping system provides superior conductivity, is vibration resistant, and offers superb corrosion resistance for normal and hazardous environments.
8. Internal jumpers (circuit bridges) free up valuable wiring space and reduce assembly time.

Additional Colors Available for IEC Terminal Blocks

IEC FEED THROUGH DIN RAIL TERMINAL BLOCKS

See bottom of page 5 for color options.

DISCOUNT SCHEDULE G

8mm (5/16") Width

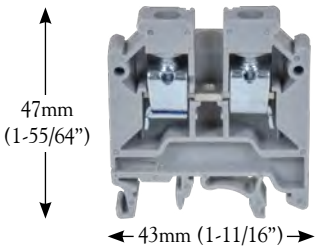

10mm (25/64") Width

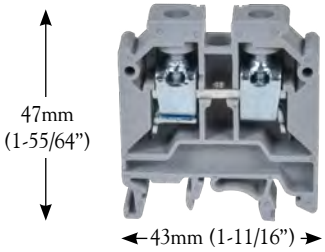

	WTB2-W6			WTB2-W10		
SPECIFICATIONS	**SINGLE-CIRCUIT TERMINAL BLOCK**			**SINGLE-CIRCUIT TERMINAL BLOCK**		
Certifications	UL 1059 File #: E145984	IEC 60947-7-1		UL 1059 File #: E145984	IEC 60947-7-1	
Voltage Rating (V)	600	750		600	750	
Maximum Current (A)	50	41		65	57	
WIRE RANGE						
Solid Strand Conductor mm²	1.5 - 10			1.5 - 16		
Fine Strand Conductor mm²	1.5 - 6			1.5 - 10		
AWG Conductor	22 - 8			18 - 6	—	
Wire Strip Length (mm/inches)	12 / 0.47			12 / 0.47		
Tightening Torque (for Terminal Block) (Nm/Lb-in)	0.8 / 9			1.2 / 14		
Tightening Torque (for Circuit Bridge) (Nm/Lb-in)	0.5 / 4.43			0.5 / 4.43		
OPERATING TEMPERATURE						
Operating Temperature	-20 to +80° C (-4 to +176° F)			-20 to +80° C (-4 to +176° F)		
ROHS COMPLIANCE	For RoHS compliance documentation by product, refer to www.c3controls.com					
TERMINAL BLOCKS	**CAT. NO.**	**PCS./PKG.**	**LIST/PC.**	**CAT. NO.**	**PCS./PKG.**	**LIST/PC.**
(Standard) Grey	WTB2-W6	100	$ 1.20	WTB2-W10	100	$ 1.60
Black	WTB2-W6-BK	100	$ 1.30	WTB2-W10-BK	100	$ 1.70
Blue	WTB2-W6-BE	100	$ 1.30	WTB2-W10-BE	100	$ 1.70
Green	WTB2-W6-GN	100	$ 1.30	WTB2-W10-GN	100	$ 1.70
Orange	WTB2-W6-OR	100	$ 1.30	WTB2-W10-OR	100	$ 1.70
Red	WTB2-W6-RD	100	$ 1.30	WTB2-W10-RD	100	$ 1.70
White	WTB2-W6-WH	100	$ 1.30	WTB2-W10-WH	100	$ 1.70
Yellow	WTB2-W6-YW	100	$ 1.30	WTB2-W10-YW	100	$ 1.70
ACCESSORIES (see pages 31-32)	**CAT. NO.**	**PCS./PKG.**	**LIST/PC.**	**CAT. NO.**	**PCS./PKG.**	**LIST/PC.**
End Barrier						
Grey, Non-Metallic (Installs on 35mm DIN Rail)	WTB2-EB	50	$ 1.50	WTB2-EB	50	$ 1.50
Grey, Non-Metallic (Installs on 32mm and 35mm DIN Rail)	WTB2-EB2	50	$ 1.50	WTB2-EB2	50	$ 1.50
Steel (Installs on 35mm DIN Rail)	WTB2-EB3	50	$ 1.50	WTB2-EB3	50	$ 1.50
Circuit Bridge						
2 Position	WTB2-W6/2CB	10	$ 2.10	WTB2-W10/2CB	10	$ 2.20
3 Position	WTB2-W6/3CB	10	$ 3.00	WTB2-W10/3CB	10	$ 2.90
4 Position	WTB2-W6/4CB	10	$ 3.90	WTB2-W10/4CB	10	$ 4.00
10 Position	WTB2-W6/10CB	10	$ 9.20	WTB2-W10/10CB	10	$ 9.10
End Plate	WTB2-EPW6/10	50	$ 0.44	WTB2-EPW6/10	50	$ 0.44
Separator Plate	WTB2-AD6/10	50	$ 0.48	WTB2-AD6/10	50	$ 0.48
Partition Plate	WTB2-PPW6/10	50	$ 0.48	WTB2-PPW6/10	50	$ 0.48
Marker	WTB2-M8	100	$ 0.07	WTB2-M10	100	$ 0.14
Group Markers (see page 31)						
Plated Steel Mounting Rail, DIN						
35mm x 7.5mm - Slotted - 1 Meter	DRMR3	1	$ 9.70	DRMR3	1	$ 9.70
35mm x 7.5mm - Slotted - 2 Meters	DRMR6	10	$19.20	DRMR6	10	$19.20
35mm x 15mm - Slotted - 1 Meter	DRMR3D	1	$14.40	DRMR3D	1	$14.40
35mm x 15mm - Slotted - 2 Meters	DRMR6D	10	$27.60	DRMR6D	10	$27.60
Aluminum Mounting Rail, DIN						
35mm x 7.5mm - Slotted - 1 Meter	DRMR3A	1	$16.80	DRMR3A	1	$16.80
DIN Rail Support Bracket	WTB2-BRKT1	1	$ 1.60	WTB2-BRKT1	1	$ 1.60

IEC FEED THROUGH DIN RAIL TERMINAL BLOCKS

DISCOUNT SCHEDULE **G**

12mm (15/32") Width

49mm (1-59/64")

43mm (1-11/16")

12mm (15/32") Width

56mm (2-13/64")

49.5mm (1-15/16")

	WTB2-W16			WTB2-W25		
SPECIFICATIONS	**SINGLE-CIRCUIT TERMINAL BLOCK**			**SINGLE-CIRCUIT TERMINAL BLOCK**		
Certifications	c UL us UL 1059 File #: E145984	CE IEC 60947-7-1		c UL us UL 1059 File #: E145984	CE IEC 60947-7-1	
Voltage Rating (V)	600	750		600	750	
Maximum Current (A)	85	76		115	101	
WIRE RANGE						
Solid Strand Conductor mm²	2.5 - 25			6 - 35		
Fine Strand Conductor mm²	2.5 - 16			6 - 25		
AWG Conductor	16 - 4			14 - 3	—	
Wire Strip Length (mm/inches)	16 / 0.63			18 / 0.71		
Tightening Torque (for Terminal Block) (Nm/Lb-in)	2.0 / 14			2.0 / 14		
Tightening Torque (for Circuit Bridge) (Nm/Lb-in)	0.5 / 4.43			0.8 / 7.08		
OPERATING TEMPERATURE						
Operating Temperature	-20 to +80° C (-4 to +176° F)			-20 to +80° C (-4 to +176° F)		
ROHS COMPLIANCE	For RoHS compliance documentation by product, refer to www.c3controls.com					
TERMINAL BLOCKS	**CAT. NO.**	**PCS./PKG.**	**LIST/PC.**	**CAT. NO.**	**PCS./PKG.**	**LIST/PC.**
(Standard) Grey	WTB2-W16	50	$ 2.50	WTB2-W25	50	$ 3.60
Blue	WTB2-W16-BE	50	$ 2.80	WTB2-W25-BE	50	$ 3.90
ACCESSORIES (see pages 31-32)	**CAT. NO.**	**PCS./PKG.**	**LIST/PC.**	**CAT. NO.**	**PCS./PKG.**	**LIST/PC.**
End Barrier						
Grey, Non-Metallic (Installs on 35mm DIN Rail)	WTB2-EB	50	$ 1.50	WTB2-EB	50	$ 1.50
Grey, Non-Metallic (Installs on 32mm and 35mm DIN Rail)	WTB2-EB2	50	$ 1.50	WTB2-EB2	50	$ 1.50
Steel (Installs on 35mm DIN Rail)	WTB2-EB3	50	$ 1.50	WTB2-EB3	50	$ 1.50
Circuit Bridge						
2 Position	WTB2-W16/2CB	10	$ 2.20	WTB2-W25/2CB	10	$ 2.20
3 Position	WTB2-W16/3CB	10	$ 2.90	WTB2-W25/3CB	10	$ 2.90
4 Position	WTB2-W16/4CB	10	$ 4.00	WTB2-W25/4CB	10	$ 4.00
10 Position	WTB2-W16/10CB	10	$ 9.30	WTB2-W25/10CB	10	$ 9.30
End Plate	—	—	—	WTB2-EPW25	50	$ 0.80
Separator Plate	WTB2-AD16	50	$ 0.46	—	—	—
Partition Plate	—	—	—	WTB2-PPW25	50	$ 0.85
Marker	WTB2-M12	100	$ 0.14	WTB2-M12	100	$ 0.14
Group Markers (see page 31)						
Plated Steel Mounting Rail, DIN						
35mm x 7.5mm - Slotted - 1 Meter	DRMR3	1	$ 9.70	DRMR3	1	$ 9.70
35mm x 7.5mm - Slotted - 2 Meters	DRMR6	10	$19.20	DRMR6	10	$19.20
35mm x 15mm - Slotted - 1 Meter	DRMR3D	1	$14.40	DRMR3D	1	$14.40
35mm x 15mm - Slotted - 2 Meters	DRMR6D	10	$27.60	DRMR6D	10	$27.60
Aluminum Mounting Rail, DIN						
35mm x 7.5mm - Slotted - 1 Meter	DRMR3A	1	$16.80	DRMR3A	1	$16.80
DIN Rail Support Bracket	WTB2-BRKT1	1	$ 1.60	WTB2-BRKT1	1	$ 1.60

See bottom of page 5 for color options.

IEC FEED THROUGH DIN RAIL TERMINAL BLOCKS

DISCOUNT SCHEDULE **G**

15mm (19/32") Width

58mm (2-9/32")

50.5mm (1-63/64")

20.5mm (51/64") Width

75.5mm (2-31/32")

71mm (2-51/64")

	WTB2-W35			WTB2-W70		
SPECIFICATIONS	**SINGLE-CIRCUIT TERMINAL BLOCK**			**SINGLE-CIRCUIT TERMINAL BLOCK**		
Certifications	c UL us UL 1059 File #: E145984	CE IEC 60947-7-1		c UL us UL 1059 File #: E145984	CE IEC 60947-7-1	
Voltage Rating (V)	600	750		600	1000	
Maximum Current (A)	145	145		150	150	
WIRE RANGE						
Solid Strand Conductor mm^2	10 - 50			16 - 70		
Fine Strand Conductor mm^2	10 - 35			16 - 50		
AWG Conductor	8 - 2	—		6 - 2 / 0		
Wire Strip Length (mm/inches)	18 / 0.71			22 / 0.87		
Tightening Torque (for Terminal Block) (Nm/Lb-in)	2.5 / 25			6.8 / 60		
Tightening Torque (for Circuit Bridge) (Nm/Lb-in)	0.8 / 7.08			—		
OPERATING TEMPERATURE						
Operating Temperature	-20 to +80° C (-4 to +176° F)			-20 to +80° C (-4 to +176° F)		
ROHS COMPLIANCE	For RoHS compliance documentation by product, refer to www.c3controls.com					
TERMINAL BLOCKS	**CAT. NO.**	**PCS./PKG.**	**LIST/PC.**	**CAT. NO.**	**PCS./PKG.**	**LIST/PC.**
(Standard) Grey	WTB2-W35	50	$ 4.00	WTB2-W70	20	$14.00
ACCESSORIES (See pages 31-32)	**CAT. NO.**	**PCS./PKG.**	**LIST/PC.**	**CAT. NO.**	**PCS./PKG.**	**LIST/PC.**
End Barrier						
Grey, Non-Metallic (Installs on 35mm DIN Rail)	WTB2-EB	50	$ 1.50	WTB2-EB	50	$ 1.50
Grey, Non-Metallic (Installs on 32mm and 35mm DIN Rail)	WTB2-EB2	50	$ 1.50	WTB2-EB2	50	$ 1.50
Steel (Installs on 35mm DIN Rail)	WTB2-EB3	50	$ 1.50	WTB2-EB3	50	$ 1.50
Circuit Bridge						
2 Position	WTB2-W35/2CB	10	$ 2.30	—	—	—
3 Position	WTB2-W35/3CB	10	$ 3.10	—	—	—
4 Position	WTB2-W35/4CB	10	$ 4.10	—	—	—
10 Position	WTB2-W35/10CB	10	$ 9.70	—	—	—
End Plate	WTB2-EPW35	50	$ 0.85	—	—	—
Partition Plate	WTB2-PPW35	50	$ 0.90	—	—	—
Marker	WTB2-M15	100	$ 0.14	WTB2-M50	10	$ 0.18
Group Markers (see page 31)						
Plated Steel Mounting Rail, DIN						
35mm x 7.5mm - Slotted - 1 Meter	DRMR3	1	$ 9.70	DRMR3	1	$ 9.70
35mm x 7.5mm - Slotted - 2 Meters	DRMR6	10	$19.20	DRMR6	10	$19.20
35mm x 15mm - Slotted - 1 Meter	DRMR3D	1	$14.40	DRMR3D	1	$14.40
35mm x 15mm - Slotted - 2 Meters	DRMR6D	10	$27.60	DRMR6D	10	$27.60
Aluminum Mounting Rail, DIN						
35mm x 7.5mm - Slotted - 1 Meter	DRMR3A	1	$16.80	DRMR3A	1	$16.80
DIN Rail Support Bracket	WTB2-BRKT1	1	$ 1.60	WTB2-BRKT1	1	$ 1.60

See bottom of page 5 for color options.

IEC FEED THROUGH DIN RAIL TERMINAL BLOCKS

DISCOUNT SCHEDULE G

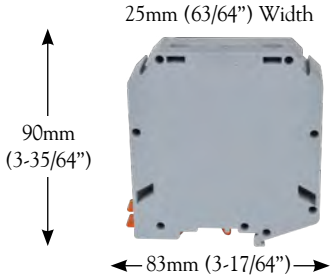

	WTB2-W95		
SPECIFICATIONS	**SINGLE-CIRCUIT TERMINAL BLOCK**		
Certifications	UL 1059 File #: E145984	IEC 60947-7-1	
Voltage Rating (V)	600	1000	
Maximum Current (A)	230	232	
WIRE RANGE			
Solid Strand Conductor mm^2	16 - 120		
Fine Strand Conductor mm^2	16 - 95		
AWG Conductor	2 - 4 / 0		
Wire Strip Length (mm/inches)	24 / 0.94		
Tightening Torque (Nm/Lb-in)	18.2 / 160		
OPERATING TEMPERATURE			
Operating Temperature	-20 to +80° C (-4 to +176° F)		
ROHS COMPLIANCE	For RoHS compliance documentation by product, refer to www.c3controls.com		
TERMINAL BLOCKS	**CAT. NO.**	**PCS./PKG.**	**LIST/PC.**
(Standard) Grey	WTB2-W95	10	$45.00
Blue	WTB2-W95-BE*	10	$46.00
ACCESSORIES (See pages 31-32)	**CAT. NO.**	**PCS./PKG.**	**LIST/PC.**
End Barrier			
Grey, Non-Metallic (Installs on 35mm DIN Rail)	WTB2-EB	50	$ 1.50
Grey, Non-Metallic (Installs on 32mm and 35mm DIN Rail)	WTB2-EB2	50	$ 1.50
Steel (Installs on 35mm DIN Rail)	WTB2-EB3	50	$ 1.50
Marker	WTB2-M50	10	$ 0.18
Group Markers (see page 31)			
Plated Steel Mounting Rail, DIN			
35mm x 7.5mm - Slotted - 1 Meter	DRMR3	1	$ 9.70
35mm x 7.5mm - Slotted - 2 Meters	DRMR6	10	$19.20
35mm x 15mm - Slotted - 1 Meter	DRMR3D	1	$14.40
35mm x 15mm - Slotted - 2 Meters	DRMR6D	10	$27.60
Aluminum Mounting Rail, DIN			
35mm x 7.5mm - Slotted - 1 Meter	DRMR3A	1	$16.80
DIN Rail Support Bracket	WTB2-BRKT1	1	$ 1.60

See bottom of page 5 for color options.

NOTE: products marked with * are not available for same day shipping. Contact our Customer First Team for lead times and minimum order quantities.

IEC GROUND DIN RAIL TERMINAL BLOCKS

DISCOUNT SCHEDULE G

6mm (15/64") Width

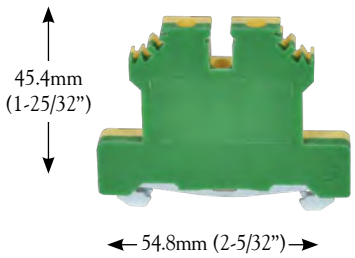

10mm (25/64") Width

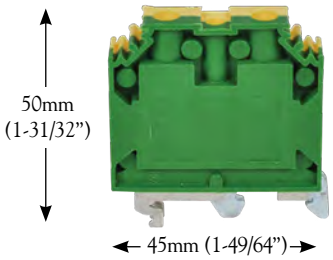

	WTB2-W2/4G			WTB2-W6/10G		
SPECIFICATIONS	**SINGLE-CIRCUIT TERMINAL BLOCK**			**SINGLE-CIRCUIT TERMINAL BLOCK**		
Certifications	c UL us UL 1059 File #: E145984	CE IEC 60947-7-2		c UL us UL 1059 File #: E145984	CE IEC 60947-7-2	
WIRE RANGE						
Solid Strand Conductor mm²	0.5 - 6			1.5 - 16		
Fine Strand Conductor mm²	0.5 - 4			1.5 - 10		
AWG Conductor	22 - 10			16 - 6		
Wire Strip Length (mm/inches)	9 / 0.35			12 / 0.47		
Tightening Torque (Nm/Lb-in)	0.5 / 7			1.2 / 14		
OPERATING TEMPERATURE						
Operating Temperature	-20 to +80° C (-4 to +176° F)			-20 to +80° C (-4 to +176° F)		
ROHS COMPLIANCE	For RoHS compliance documentation by product, refer to www.c3controls.com					
TERMINAL BLOCKS	**CAT. NO.**	**PCS./PKG.**	**LIST/PC.**	**CAT. NO.**	**PCS./PKG.**	**LIST/PC.**
Yellow and Green insulation housing with metal mounting foot.	WTB2-W2/4G	50	$ 4.00	WTB2-W6/10G	50	$ 4.40
ACCESSORIES (see pages 31-32)	**CAT. NO.**	**PCS./PKG.**	**LIST/PC.**	**CAT. NO.**	**PCS./PKG.**	**LIST/PC.**
End Barrier						
Grey, Non-Metallic (Installs on 35mm DIN Rail)	WTB2-EB	50	$ 1.50	WTB2-EB	50	$ 1.50
Grey, Non-Metallic (Installs on 32mm and 35mm DIN Rail)	WTB2-EB2	50	$ 1.50	WTB2-EB2	50	$ 1.50
Steel (Installs on 35mm DIN Rail)	WTB2-EB3	50	$ 1.50	WTB2-EB3	50	$ 1.50
Marker	WTB2-M6	100	$ 0.07	WTB2-M10	100	$ 0.14
Group Markers (see page 31)						
Plated Steel Mounting Rail, DIN						
35mm x 7.5mm - Slotted - 1 Meter	DRMR3	1	$ 9.70	DRMR3	1	$ 9.70
35mm x 7.5mm - Slotted - 2 Meters	DRMR6	10	$19.20	DRMR6	10	$19.20
35mm x 15mm - Slotted - 1 Meter	DRMR3D	1	$14.40	DRMR3D	1	$14.40
35mm x 15mm - Slotted - 2 Meters	DRMR6D	10	$27.60	DRMR6D	10	$27.60
Aluminum Mounting Rail, DIN						
35mm x 7.5mm - Slotted - 1 Meter	DRMR3A	1	$16.80	DRMR3A	1	$16.80
DIN Rail Support Bracket	WTB2-BRKT1	1	$ 1.60	WTB2-BRKT1	1	$ 1.60

Screw Clamp Grounding Terminals

Use of grounding terminals instead of grounding studs and wire lugs to terminate ground wires saves installation and wiring time substantially. Grounding terminals clamp mechanically onto the DIN Rail by tightening the center mounting screw, making a reliable electrical connection between the current bar and the DIN Rail. The rail serves as a bus bar and automatically distributes ground potential to all other ground terminals on the same rail. Grounding terminals can also be used as end stops, preventing other terminal blocks and components from moving laterally on the DIN Rail. Grounding terminals are supplied with a green/yellow thermoplastic housing as standard for easy identification and international acceptance. The brass mounting foot is tin-plated for low contact grounding resistance.

IEC GROUND DIN RAIL TERMINAL BLOCKS

DISCOUNT SCHEDULE G

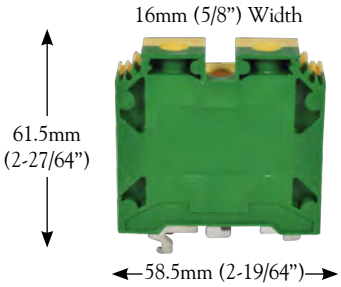

	WTB2-W16/35G		
SPECIFICATIONS	**SINGLE-CIRCUIT TERMINAL BLOCK**		
Certifications	UL 1059 File #: E145984	IEC 60947-7-2	
WIRE RANGE			
Solid Strand Conductor mm²	10 - 50		
Fine Strand Conductor mm²	10 - 35		
AWG Conductor	8 - 2	—	
Wire Strip Length (mm/inches)	18 / 0.71		
Tightening Torque (Nm/Lb-in)	2.5 / 25		
OPERATING TEMPERATURE			
Operating Temperature	-20 to +80° C (-4 to +176° F)		
ROHS COMPLIANCE	For RoHS compliance documentation by product, refer to www.c3controls.com		
TERMINAL BLOCKS	**CAT. NO.**	**PCS./PKG.**	**LIST/PC.**
Yellow and Green insulation housing with metal mounting foot.	WTB2-W16/35G	10	$ 6.00
ACCESSORIES (see pages 31-32)	**CAT. NO.**	**PCS./PKG.**	**LIST/PC.**
End Barrier			
Grey, Non-Metallic (Installs on 35mm DIN Rail)	WTB2-EB	50	$ 1.50
Grey, Non-Metallic (Installs on 32mm and 35mm DIN Rail)	WTB2-EB2	50	$ 1.50
Steel (Installs on 35mm DIN Rail)	WTB2-EB3	50	$ 1.50
Marker	WTB2-M15	100	$ 0.14
Group Markers (see page 31)			
Plated Steel Mounting Rail, DIN			
35mm x 7.5mm - Slotted - 1 Meter	DRMR3	1	$ 9.70
35mm x 7.5mm - Slotted - 2 Meters	DRMR6	10	$19.20
35mm x 15mm - Slotted - 1 Meter	DRMR3D	1	$14.40
35mm x 15mm - Slotted - 2 Meters	DRMR6D	10	$27.60
Aluminum Mounting Rail, DIN			
35mm x 7.5mm - Slotted - 1 Meter	DRMR3A	1	$16.80
DIN Rail Support Bracket	WTB2-BRKT1	1	$ 1.60

Multi-Conductor Screw Clamp

The multi-conductor screw clamp terminals offer a reliable solution for multiple wire connections. The terminal eliminates conventional cross connections, looping wires and reliability problems encountered when connecting two wires in one clamp. The terminals provide multiple connection points in the terminal itself, and the possibility of further multiplication of connections with circuit bridges. The multi-conductor terminal blocks can even be bridged to standard feed through screw clamp terminal blocks of the same conductor size.

WTB2-W4-12 features one termination point on one side and two termination points on the other side, while the WTB2-W4-22 has two termination points on each side. Bridging facility is at the center of the terminals.

IEC MULTI-CONDUCTOR FEED THROUGH DIN RAIL TERMINAL BLOCKS

DISCOUNT SCHEDULE **G**

6mm (15/64") Width

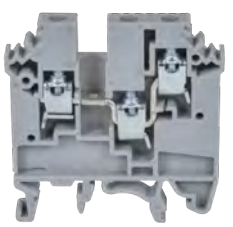

6mm (15/64") Width

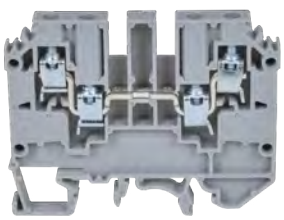

	WTB2-W4-12			WTB2-W4-22		
SPECIFICATIONS	**SINGLE-CIRCUIT TERMINAL BLOCK**			**SINGLE-CIRCUIT TERMINAL BLOCK**		
Certifications	UL 1059 File #: E145984	IEC 60947-7-1		UL 1059 File #: E145984	IEC 60947-7-1	
Voltage Rating (V)	600	600		600	600	
Maximum Current (A)	32	32		35	32	
WIRE RANGE						
Solid Strand Conductor mm²	0.5 - 4			0.5 - 4		
Fine Strand Conductor mm²	0.5 - 6			0.5 - 6		
AWG Conductor	22 - 10	—		22 - 10	—	
Wire Strip Length (mm/inches)	9 / 0.35			9 / 0.35		
Tightening Torque (for Terminal Block) (Nm/Lb-in)	0.5 / 7			0.5 / 7		
Tightening Torque (for Circuit Bridge) (Nm/Lb-in)	0.2 / 1.77			0.2 / 1.77		
OPERATING TEMPERATURE						
Operating Temperature	-20 to +80° C (-4 to +176° F)			-20 to +80° C (-4 to +176° F)		
ROHS COMPLIANCE	For RoHS compliance documentation by product, refer to www.c3controls.com					
TERMINAL BLOCKS	**CAT. NO.**	**PCS./PKG.**	**LIST/PC.**	**CAT. NO.**	**PCS./PKG.**	**LIST/PC.**
(Standard) Grey	WTB2-W4-12	100	$ 3.00	WTB2-W4-22	50	$ 3.00
ACCESSORIES (see pages 31-32)	**CAT. NO.**	**PCS./PKG.**	**LIST/PC.**	**CAT. NO.**	**PCS./PKG.**	**LIST/PC.**
End Barrier						
Grey, Non-Metallic (Installs on 35mm DIN Rail)	WTB2-EB	50	$ 1.50	WTB2-EB	50	$ 1.50
Grey, Non-Metallic (Installs on 32mm and 35mm DIN Rail)	WTB2-EB2	50	$ 1.50	WTB2-EB2	50	$ 1.50
Steel (Installs on 35mm DIN Rail)	WTB2-EB3	50	$ 1.50	WTB2-EB3	50	$ 1.50
Circuit Bridge						
2 Position	WTB2-W4/2CB	10	$ 2.20	WTB2-W4/2CB	10	$ 2.20
3 Position	WTB2-W4/3CB	10	$ 3.20	WTB2-W4/3CB	10	$ 3.20
4 Position	WTB2-W4/4CB	10	$ 4.20	WTB2-W4/4CB	10	$ 4.20
10 Position	WTB2-W4/10CB	10	$ 9.80	WTB2-W4/10CB	10	$ 9.80
End Plate	WTB2-EPW4-12	50	$ 1.20	WTB2-EPW4-22	50	$ 1.20
Marker	WTB2-M6	100	$ 0.07	WTB2-M6	100	$ 0.07
Group Markers (see page 31)						
Plated Steel Mounting Rail, DIN						
35mm x 7.5mm - Slotted - 1 Meter	DRMR3	1	$ 9.70	DRMR3	1	$ 9.70
35mm x 7.5mm - Slotted - 2 Meters	DRMR6	10	$19.20	DRMR6	10	$19.20
35mm x 15mm - Slotted - 1 Meter	DRMR3D	1	$14.40	DRMR3D	1	$14.40
35mm x 15mm - Slotted - 2 Meters	DRMR6D	10	$27.60	DRMR6D	10	$27.60
Aluminum Mounting Rail, DIN						
35mm x 7.5mm - Slotted - 1 Meter	DRMR3A	1	$16.80	DRMR3A	1	$16.80
DIN Rail Support Bracket	WTB2-BRKT1	1	$ 1.60	WTB2-BRKT1	1	$ 1.60

Double Level, Feed-Through Terminals

The double level terminals facilitate higher termination density without the need to increase the length of the mounting rail. Jumping between terminal blocks can be done at both levels with the circuit bridges. Both levels of the terminal block can also be labeled with terminal block markers. The WTB2-W4DDB internally shorted double level terminals are useful for distribution applications using circuit bridges on the lower level.

IEC DOUBLE-LEVEL, FEED THROUGH DIN RAIL TERMINAL BLOCKS

DISCOUNT SCHEDULE G

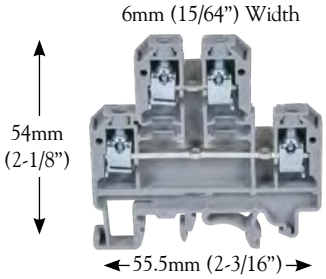

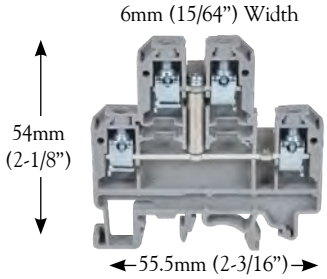

	WTB2-W4DD			WTB2-W4DDB		
SPECIFICATIONS	**DOUBLE-CIRCUIT TERMINAL BLOCK**			**SINGLE-CIRCUIT TERMINAL BLOCK**		
Certifications File #: E145984	UL 1059 & IEC 60947-7-1 File #: E145984					
Voltage Rating (V)	UL: 300 / CE: 400					
Maximum Current (A)	UL: 35 / CE: 32					
WIRE RANGE						
Solid Strand Conductor mm^2	0.5 - 6					
Fine Strand Conductor mm^2	0.5 - 4					
AWG Conductor	UL: 22 - 10					
Wire Strip Length (mm/inches)	9 / 0.35					
Tightening Torque (Nm/Lb-in) (for Terminal Block)	0.5 / 6					
Tightening Torque (Nm/Lb-in) (for Circuit Bridge)	0.2 / 1.77					
OPERATING TEMPERATURE						
Operating Temperature	-20 to +80° C (-4 to +176° F)					
ROHS COMPLIANCE	For RoHS compliance documentation by product, refer to www.c3controls.com					
TERMINAL BLOCKS	**CAT. NO.**	**PCS./PKG.**	**LIST/PC.**	**CAT. NO.**	**PCS./PKG.**	**LIST/PC.**
(Standard) Grey	WTB2-W4DD	100	$ 3.00	WTB2-W4DDB	100	$ 4.50
ACCESSORIES (see pages 31-32)	**CAT. NO.**	**PCS./PKG.**	**LIST/PC.**	**CAT. NO.**	**PCS./PKG.**	**LIST/PC.**
End Barrier						
Grey, Non-Metallic (Installs on 35mm DIN Rail)	WTB2-EB	50	$ 1.50	WTB2-EB	50	$ 1.50
Grey, Non-Metallic (Installs on 32mm and 35mm DIN Rail)	WTB2-EB2	50	$ 1.50	WTB2-EB2	50	$ 1.50
Steel (Installs on 35mm DIN Rail)	WTB2-EB3	50	$ 1.50	WTB2-EB3	50	$ 1.50
Circuit Bridge						
2 Position	WTB2-W4D/2CB	10	$ 2.20	WTB2-W4D/2CB	10	$ 2.20
3 Position	WTB2-W4D/3CB	10	$ 3.20	WTB2-W4D/3CB	10	$ 3.20
4 Position	WTB2-W4D/4CB	10	$ 4.20	WTB2-W4D/4CB	10	$ 4.20
10 Position	WTB2-W4D/10CB	10	$ 9.80	WTB2-W4D/10CB	10	$ 9.80
End Plate	WTB2-EPW4DD	50	$ 1.20	WTB2-EPW4DD	50	$ 1.20
Marker	WTB2-M2	100	$ 0.07	WTB2-M2	100	$ 0.07
Group Markers (see page 31)						
Plated Steel Mounting Rail, DIN						
35mm x 7.5mm - Slotted - 1 Meter	DRMR3	1	$ 9.70	DRMR3	1	$ 9.70
35mm x 7.5mm - Slotted - 2 Meters	DRMR6	10	$19.20	DRMR6	10	$19.20
35mm x 15mm - Slotted - 1 Meter	DRMR3D	1	$14.40	DRMR3D	1	$14.40
35mm x 15mm - Slotted - 2 Meters	DRMR6D	10	$27.60	DRMR6D	10	$27.60
Aluminum Mounting Rail, DIN						
35mm x 7.5mm - Slotted - 1 Meter	DRMR3A	1	$16.80	DRMR3A	1	$16.80
DIN Rail Support Bracket	WTB2-BRKT1	1	$ 1.60	WTB2-BRKT1	1	$ 1.60

IEC TRIPLE-LEVEL, FEED THROUGH DIN RAIL TERMINAL BLOCKS

DISCOUNT SCHEDULE G

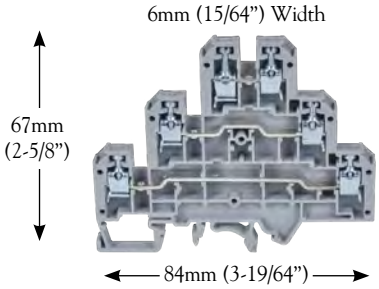

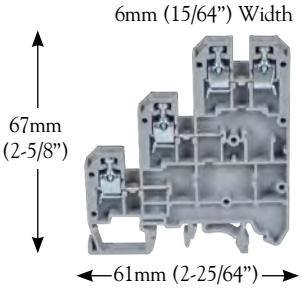

	WTB2-TL2			WTB2-TL2S		
SPECIFICATIONS	**TRIPLE-CIRCUIT TERMINAL BLOCK**			**SENSOR TERMINAL BLOCK**		
Certifications	UL 1059 File #: E145984	IEC 60947-7-1		UL 1059 File #: E145984	IEC 60947-7-1	
Voltage Rating (V)	300	500		300	500	
Maximum Current (A)	25	24		25	24	
WIRE RANGE						
Solid Strand Conductor mm^2	0.5 - 4			0.5 - 4		
Fine Strand Conductor mm^2	0.5 - 2.5			0.5 - 2.5		
AWG Conductor	22 - 12	—		22 - 12	—	
Wire Strip Length (mm/inches)	9 / 0.35			9 / 0.35		
Tightening Torque (for Terminal Block) (Nm/Lb-in)	0.4 / 4.5			0.4 / 4.5		
Tightening Torque (for Circuit Bridge) (Nm/Lb-in)	0.2 / 1.77			0.2 / 1.77		
OPERATING TEMPERATURE						
Operating Temperature	-20 to +80° C (-4 to +176° F)			-20 to +80° C (-4 to +176° F)		
ROHS COMPLIANCE	For RoHS compliance documentation by product, refer to www.c3controls.com					
TERMINAL BLOCKS	**CAT. NO.**	**PCS./PKG.**	**LIST/PC.**	**CAT. NO.**	**PCS./PKG.**	**LIST/PC.**
(Standard) Grey	WTB2-TL2	50	$ 3.20	WTB2-TL2S	50	$ 2.90
ACCESSORIES (see pages 31-32)	**CAT. NO.**	**PCS./PKG.**	**LIST/PC.**	**CAT. NO.**	**PCS./PKG.**	**LIST/PC.**
End Barrier						
Grey, Non-Metallic (Installs on 35mm DIN Rail)	WTB2-EB	50	$ 1.50	WTB2-EB	50	$ 1.50
Grey, Non-Metallic (Installs on 32mm and 35mm DIN Rail)	WTB2-EB2	50	$ 1.50	WTB2-EB2	50	$ 1.50
Steel (Installs on 35mm DIN Rail)	WTB2-EB3	50	$ 1.50	WTB2-EB3	50	$ 1.50
Circuit Bridge						
2 Position	WTB2-W4D/2CB	10	$ 2.20	WTB2-W4D/2CB	10	$ 2.20
3 Position	WTB2-W4D/3CB	10	$ 3.20	WTB2-W4D/3CB	10	$ 3.20
4 Position	WTB2-W4D/4CB	10	$ 4.20	WTB2-W4D/4CB	10	$ 4.20
10 Position	WTB2-W4D/10CB	10	$ 9.80	WTB2-W4D/10CB	10	$ 9.80
End Plate	WTB2-EPTL2	50	$ 1.20	WTB2-EPTL2S	50	$ 1.20
Marker	WTB2-M2	100	$ 0.07	WTB2-M2	100	$ 0.07
Group Markers (see page 31)						
Plated Steel Mounting Rail, DIN						
35mm x 7.5mm - Slotted - 1 Meter	DRMR3	1	$ 9.70	DRMR3	1	$ 9.70
35mm x 7.5mm - Slotted - 2 Meters	DRMR6	10	$19.20	DRMR6	10	$19.20
35mm x 15mm - Slotted - 1 Meter	DRMR3D	1	$14.40	DRMR3D	1	$14.40
35mm x 15mm - Slotted - 2 Meters	DRMR6D	10	$27.60	DRMR6D	10	$27.60
Aluminum Mounting Rail, DIN						
35mm x 7.5mm - Slotted - 1 Meter	DRMR3A	1	$16.80	DRMR3A	1	$16.80
DIN Rail Support Bracket	WTB2-BRKT1	1	$ 1.60	WTB2-BRKT1	1	$ 1.60

Triple Level, Feed-Through Terminals

The triple level terminals are ideal for control systems with three wire DC sensors and actuators. The simplified three level connections facilitate higher wire termination density. The WTB2-TL2 feed-through terminals, with connecting points at all three levels, offer multiple choices of signal and power distribution at any level. The top level of the WTB2-TL2S provides connecting points for the signal while the middle and bottom level connecting points are used for the positive and negative voltage supply connections. In applications where switching indication is required, WTB2-TL2SLP and WTB2-TL2SLN terminal blocks with built-in LED indication are also available.

IEC TRIPLE-LEVEL, FEED THROUGH DIN RAIL TERMINAL BLOCKS

①for PNP sensors
②for NPN sensors

DISCOUNT SCHEDULE G

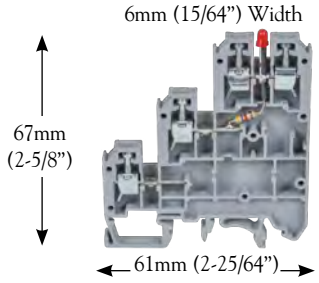

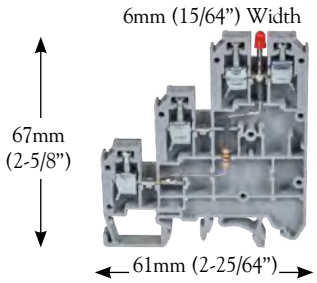

	WTB2-TL2SLP①			WTB2-TL2SLN②		
SPECIFICATIONS	**SENSOR TERMINAL BLOCK WITH LED**			**SENSOR TERMINAL BLOCK WITH LED**		
Certifications	c UL us UL 1059 File #: E145984	CE IEC 60947-7-1		c UL us UL 1059 File #: E145984	CE IEC 60947-7-1	
Voltage Rating (V)	300	500		300	500	
Maximum Current (A)	25	24		25	24	
WIRE RANGE						
Solid Strand Conductor mm²	0.5 - 4			0.5 - 4		
Fine Strand Conductor mm²	0.5 - 2.5			0.5 - 2.5		
AWG Conductor	22 - 12	—		22 - 12	—	
Wire Strip Length (mm/inches)	9 / 0.35			9 / 0.35		
Tightening Torque (for Terminal Block) (Nm/Lb-in)	0.4 / 4.5			0.4 / 4.5		
Tightening Torque (for Circuit Bridge) (Nm/Lb-in)	0.2 / 1.77			0.2 / 1.77		
OPERATING TEMPERATURE						
Operating Temperature	-20 to +80° C (-4 to +176° F)			-20 to +80° C (-4 to +176° F)		
ROHS COMPLIANCE	For RoHS compliance documentation by product, refer to www.c3controls.com					
TERMINAL BLOCKS	**CAT. NO.**	**PCS./PKG.**	**LIST/PC.**	**CAT. NO.**	**PCS./PKG.**	**LIST/PC.**
(Standard) Grey	WTB2-TL2SLP	50	$ 6.10	WTB2-TL2SLN	50	$ 6.10
ACCESSORIES (see pages 31-32)	**CAT. NO.**	**PCS./PKG.**	**LIST/PC.**	**CAT. NO.**	**PCS./PKG.**	**LIST/PC.**
End Barrier						
Grey, Non-Metallic (Installs on 35mm DIN Rail)	WTB2-EB	50	$ 1.50	WTB2-EB	50	$ 1.50
Grey, Non-Metallic (Installs on 32mm and 35mm DIN Rail)	WTB2-EB2	50	$ 1.50	WTB2-EB2	50	$ 1.50
Steel (Installs on 35mm DIN Rail)	WTB2-EB3	50	$ 1.50	WTB2-EB3	50	$ 1.50
Circuit Bridge						
2 Position	WTB2-W4D/2CB	10	$ 2.20	WTB2-W4D/2CB	10	$ 2.20
3 Position	WTB2-W4D/3CB	10	$ 3.20	WTB2-W4D/3CB	10	$ 3.20
4 Position	WTB2-W4D/4CB	10	$ 4.20	WTB2-W4D/4CB	10	$ 4.20
10 Position	WTB2-W4D/10CB	10	$ 9.80	WTB2-W4D/10CB	10	$ 9.80
End Plate	WTB2-EPTL2S	50	$ 1.20	WTB2-EPTL2S	50	$ 1.20
Marker	WTB2-M2	100	$ 0.07	WTB2-M2	100	$ 0.07
Group Markers (see page 31)						
Plated Steel Mounting Rail, DIN						
35mm x 7.5mm - Slotted - 1 Meter	DRMR3	1	$ 9.70	DRMR3	1	$ 9.70
35mm x 7.5mm - Slotted - 2 Meters	DRMR6	10	$19.20	DRMR6	10	$19.20
35mm x 15mm - Slotted - 1 Meter	DRMR3D	1	$14.40	DRMR3D	1	$14.40
35mm x 15mm - Slotted - 2 Meters	DRMR6D	10	$27.60	DRMR6D	10	$27.60
Aluminum Mounting Rail, DIN						
35mm x 7.5mm - Slotted - 1 Meter	DRMR3A	1	$16.80	DRMR3A	1	$16.80
DIN Rail Support Bracket	WTB2-BRKT1	1	$ 1.60	WTB2-BRKT1	1	$ 1.60

IEC FUSE HOLDER DIN RAIL TERMINAL BLOCKS

DISCOUNT SCHEDULE G

NOTE: The WTB2-FB1L has a red LED that glows to indicate a blown fuse.

9mm (23/64") Width

50mm (1-31/32")

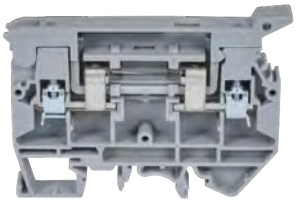

72mm (2-53/64")

9mm (23/64") Width

50mm (1-31/32")

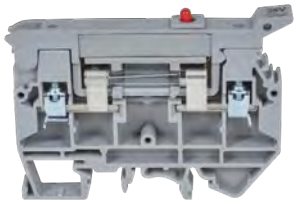

72mm (2-53/64")

	WTB2-FB1			WTB2-FB1L①		
SPECIFICATIONS	1/4" X 1-1/4" FUSE			1/4" X 1-1/4" FUSE		
Certifications	UL 1059 File #: E145984	IEC 60947-7-3		UL 1059 File #: E145984	IEC 60947-7-3	
Voltage Rating (V)	600	600		600	600	
Maximum Current (A)	6.3	6.3		6.3	6.3	
WIRE RANGE						
Solid Strand Conductor mm²	0.5 - 6			0.5 - 6		
Fine Strand Conductor mm²	0.5 - 4			0.5 - 4		
AWG Conductor	22 - 10			22 - 10		
Wire Strip Length (mm/inches)	9.5 / 0.37			9.5 / 0.37		
Tightening Torque (Nm/Lb-in)	0.5 / 7			0.5 / 7		
OPERATING TEMPERATURE						
Operating Temperature	-20 to +80° C (-4 to +176° F)			-20 to +80° C (-4 to +176° F)		
ROHS COMPLIANCE	For RoHS compliance documentation by product, refer to www.c3controls.com					
TERMINAL BLOCKS	**CAT. NO.**	**PCS./PKG.**	**LIST/PC.**	**CAT. NO.**	**PCS./PKG.**	**LIST/PC.**
(Standard) Grey	WTB2-FB1	10	$ 6.60	—	—	—
(Standard) Grey for 24V AC/DC	—	—	—	WTB2-FB1L24	10	$ 9.80
(Standard) Grey for 110V AC/DC	—	—	—	WTB2-FB1L110	10	$ 9.80
(Standard) Grey for 220V AC	—	—	—	WTB2-FB1L220	10	$ 9.80
ACCESSORIES (see pages 31-32)	**CAT. NO.**	**PCS./PKG.**	**LIST/PC.**	**CAT. NO.**	**PCS./PKG.**	**LIST/PC.**
End Barrier						
Grey, Non-Metallic (Installs on 35mm DIN Rail)	WTB2-EB	50	$ 1.50	WTB2-EB	50	$ 1.50
Grey, Non-Metallic (Installs on 32mm and 35mm DIN Rail)	WTB2-EB2	50	$ 1.50	WTB2-EB2	50	$ 1.50
Steel (Installs on 35mm DIN Rail)	WTB2-EB3	50	$ 1.50	WTB2-EB3	50	$ 1.50
End Plate	WTB2-EPFB1	50	$ 1.10	WTB2-EPFB1	50	$ 1.10
Marker	WTB2-M9	100	$ 0.11	WTB2-M9	100	$ 0.11
Group Markers (see page 31)						
Plated Steel Mounting Rail, DIN						
35mm x 7.5mm - Slotted - 1 Meter	DRMR3	1	$ 9.70	DRMR3	1	$ 9.70
35mm x 7.5mm - Slotted - 2 Meters	DRMR6	10	$19.20	DRMR6	10	$19.20
35mm x 15mm - Slotted - 1 Meter	DRMR3D	1	$14.40	DRMR3D	1	$14.40
35mm x 15mm - Slotted - 2 Meters	DRMR6D	10	$27.60	DRMR6D	10	$27.60
Aluminum Mounting Rail, DIN						
35mm x 7.5mm - Slotted - 1 Meter	DRMR3A	1	$16.80	DRMR3A	1	$16.80
DIN Rail Support Bracket	WTB2-BRKT1	1	$ 1.60	WTB2-BRKT1	1	$ 1.60

①with LED indication

Fuse Holder Terminals

Certain electrical and control systems require fuse protection – fuse holder terminals offer a convenient solution. The fuse holder terminal has a hinged fuse carrier. The fuse can be engaged or disengaged by moving the carrier. Terminals are available to accept 5 x 20mm or 5 x 25mm fuses and 1/4" X 1-1/4" fuses for North American applications. A spare fuse (provided as standard) can be placed in the carrier of WTB2-FB52 terminals. Identification with markers is possible on both the terminals and the fuse carrier. Fuse holder terminals, WTB2-FB52L, include LED indication. A specially designed built-in circuit gives indication when the fuse blows, clearly identifying a fault in the circuit.

IEC FUSE HOLDER DIN RAIL TERMINAL BLOCKS

DISCOUNT SCHEDULE G

8mm (5/16") Width

43mm (1-11/16")

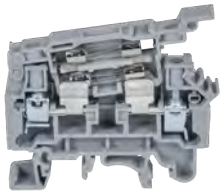

55.6mm (2-3/16")

8mm (5/16") Width

43mm (1-11/16")

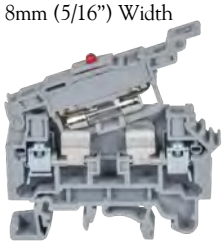

55.6mm (2-3/16")

	WTB2-FB52			WTB2-FB52L①		
SPECIFICATIONS	**5MM X 20/25MM FUSE**			**5MM X 20/25MM FUSE**		
Certifications	UL 1059 File #: E145984	IEC 60947-7-3		UL 1059 File #: E145984	IEC 60947-7-3	
Voltage Rating (V)	600	750		600	750	
Maximum Current (A)	6.3	6.3		6.3	6.3	
WIRE RANGE						
Solid Strand Conductor mm²	0.5 - 4			0.5 - 4		
Fine Strand Conductor mm²	0.5 - 4			0.5 - 4		
AWG Conductor	22 - 10	—		22 - 10	—	
Wire Strip Length (mm/inches)	9.5 / 0.37			9.5 / 0.37		
Tightening Torque (Nm/Lb-in)	0.5 / 7			0.5 / 7		
OPERATING TEMPERATURE						
Operating Temperature	-20 to +80° C (-4 to +176° F)			-20 to +80° C (-4 to +176° F)		
ROHS COMPLIANCE	For RoHS compliance documentation by product, refer to www.c3controls.com					
TERMINAL BLOCKS	**CAT. NO.**	**PCS./PKG.**	**LIST/PC.**	**CAT. NO.**	**PCS./PKG.**	**LIST/PC.**
(Standard) Grey	WTB2-FB52	100	$ 5.30	—	—	—
(Standard) Grey for 24V AC/DC	—	—	—	WTB2-FB52L24A	50	$ 9.40
(Standard) Grey for 110V AC/DC	—	—	—	WTB2-FB52L110A	50	$ 9.40
(Standard) Grey for 220V AC	—	—	—	WTB2-FB52L220A	50	$ 9.40
ACCESSORIES (see pages 31-32)	**CAT. NO.**	**PCS./PKG.**	**LIST/PC.**	**CAT. NO.**	**PCS./PKG.**	**LIST/PC.**
End Barrier						
Grey, Non-Metallic (Installs on 35mm DIN Rail)	WTB2-EB	50	$ 1.50	WTB2-EB	50	$ 1.50
Grey, Non-Metallic (Installs on 32mm and 35mm DIN Rail)	WTB2-EB2	50	$ 1.50	WTB2-EB2	50	$ 1.50
Steel (Installs on 35mm DIN Rail)	WTB2-EB3	50	$ 1.50	WTB2-EB3	50	$ 1.50
End Plate	WTB2-EPFB52	50	$ 1.20	WTB2-EPFB52	50	$ 1.20
Partition Plate	WTB2-PPFB52	50	$ 1.30	WTB2-PPFB52	50	$ 1.30
Marker	WTB2-M8② or -M2③	100 / 100	$ 0.07 / $ 0.07	WTB2-M8② or -M2③	100 / 100	$ 0.07 / $ 0.07
Group Markers (see page 31)						
Plated Steel Mounting Rail, DIN						
35mm x 7.5mm - Slotted - 1 Meter	DRMR3	1	$ 9.70	DRMR3	1	$ 9.70
35mm x 7.5mm - Slotted - 2 Meters	DRMR6	10	$19.20	DRMR6	10	$19.20
35mm x 15mm - Slotted - 1 Meter	DRMR3D	1	$14.40	DRMR3D	1	$14.40
35mm x 15mm - Slotted - 2 Meters	DRMR6D	10	$27.60	DRMR6D	10	$27.60
Aluminum Mounting Rail, DIN						
35mm x 7.5mm - Slotted - 1 Meter	DRMR3A	1	$16.80	DRMR3A	1	$16.80
DIN Rail Support Bracket	WTB2-BRKT1	1	$ 1.60	WTB2-BRKT1	1	$ 1.60

①with LED indication
②on terminal
③on fuse carrier

IEC FUSE HOLDER DIN RAIL TERMINAL BLOCKS

DISCOUNT SCHEDULE **G**

NOTE: The WTB2-FB130L has a red LED that glows to indicate a blown fuse.

9mm (23/64") Width

50mm (1-31/32")

72mm (2-53/64")

9mm (23/64") Width

50mm (1-31/32")

72mm (2-53/64")

	WTB2-FB130-NF			WTB2-FB130L①		
SPECIFICATIONS	1/4" X 1-1/4" FUSE			1/4" X 1-1/4" FUSE		
Certifications	UL 1059 File #: E145984	IEC 60947-7-3		UL 1059 File #: E145984	IEC 60947-7-3	
Voltage Rating (V)	600	750		600	750	
Maximum Current (A)	30	10		30	10	
WIRE RANGE						
Solid Strand Conductor mm^2	0.5 - 16			0.5 - 16		
Fine Strand Conductor mm^2	0.5 - 10			0.5 - 10		
AWG Conductor	20 - 6			20 - 6		
Wire Strip Length (mm/inches)	12 / 0.47			12 / 0.47		
Tightening Torque (Nm/Lb-in)	1.6 / 14			1.6 / 14		
OPERATING TEMPERATURE						
Operating Temperature	-20 to +80° C (-4 to +176° F)			-20 to +80° C (-4 to +176° F)		
ROHS COMPLIANCE	For RoHS compliance documentation by product, refer to www.c3controls.com					
TERMINAL BLOCKS	**CAT. NO.**	**PCS./PKG.**	**LIST/PC.**	**CAT. NO.**	**PCS./PKG.**	**LIST/PC.**
(Standard) Grey	WTB2-FB130-NF	10	$ 7.70	—	—	—
(Standard) Grey for 24V AC/DC	—	—	—	WTB2-FB130L24A-NF	10	$11.00
(Standard) Grey for 110V AC/DC	—	—	—	WTB2-FB130L110A-NF	10	$11.00
(Standard) Grey for 220V AC	—	—	—	WTB2-FB130L220A-NF	10	$11.00
ACCESSORIES (see pages 31-32)	**CAT. NO.**	**PCS./PKG.**	**LIST/PC.**	**CAT. NO.**	**PCS./PKG.**	**LIST/PC.**
End Barrier						
Grey, Non-Metallic (Installs on 35mm DIN Rail)	WTB2-EB	50	$ 1.50	WTB2-EB	50	$ 1.50
Grey, Non-Metallic (Installs on 32mm and 35mm DIN Rail)	WTB2-EB2	50	$ 1.50	WTB2-EB2	50	$ 1.50
Steel (Installs on 35mm DIN Rail)	WTB2-EB3	50	$ 1.50	WTB2-EB3	50	$ 1.50
Marker	WTB2-M10	100	$ 0.14	WTB2-M10	100	$ 0.14
Group Markers (see page 31)						
Plated Steel Mounting Rail, DIN						
35mm x 7.5mm - Slotted - 1 Meter	DRMR3	1	$ 9.70	DRMR3	1	$ 9.70
35mm x 7.5mm - Slotted - 2 Meters	DRMR6	10	$19.20	DRMR6	10	$19.20
35mm x 15mm - Slotted - 1 Meter	DRMR3D	1	$14.40	DRMR3D	1	$14.40
35mm x 15mm - Slotted - 2 Meters	DRMR6D	10	$27.60	DRMR6D	10	$27.60
Aluminum Mounting Rail, DIN						
35mm x 7.5mm - Slotted - 1 Meter	DRMR3A	1	$16.80	DRMR3A	1	$16.80
DIN Rail Support Bracket	WTB2-BRKT1	1	$ 1.60	WTB2-BRKT1	1	$ 1.60

①with LED indication

Disconnect Terminals

Disconnect terminal blocks provide a convenient means for isolating and disconnecting control circuits. The WTB2-FB52DB includes a hinged carrier with a tin plated brass link. The WTB2-DB1 includes a hinged lever operating a knife contact. All screw terminals of the disconnect terminal blocks have special screw heads which accept test probes.

IEC DISCONNECT DIN RAIL TERMINAL BLOCKS

DISCOUNT SCHEDULE G

8mm (5/16") Width

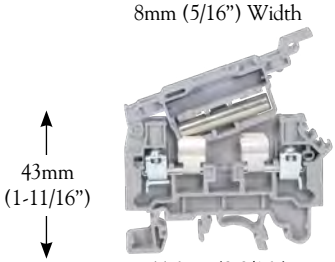

6mm (15/64") Width

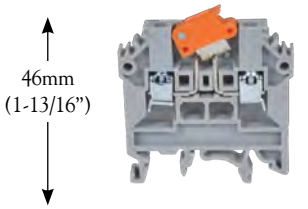

	WTB2-FB52DB			WTB2-DB1		
SPECIFICATIONS	**SINGLE-CIRCUIT TERMINAL BLOCK**			**SINGLE-CIRCUIT TERMINAL BLOCK**		
Certifications	c UL us UL 1059 File #: E145984	CE IEC 60947-7-1		c UL us UL 1059 File #: E145984	CE IEC 60947-7-1	
Voltage Rating (V)	600	750		600	750	
Maximum Current (A)	6.3	6.3		35	16	
WIRE RANGE						
Solid Strand Conductor mm^2	0.5 - 4			0.5 - 4		
Fine Strand Conductor mm^2	0.5 - 4			0.5 - 4		
AWG Conductor	22 - 10			22 - 10	—	
Wire Strip Length (mm/inches)	9.5 / 0.37			9 / 0.35		
Tightening Torque (Nm/Lb-in)	0.5 / 7			0.5 / 7		
OPERATING TEMPERATURE						
Operating Temperature	-20 to +80° C (-4 to +176° F)			-20 to +80° C (-4 to +176° F)		
ROHS COMPLIANCE	For RoHS compliance documentation by product, refer to www.c3controls.com					
TERMINAL BLOCKS	**CAT. NO.**	**PCS./PKG.**	**LIST/PC.**	**CAT. NO.**	**PCS./PKG.**	**LIST/PC.**
(Standard) Grey	WTB2-FB52DB	100	$ 3.50	WTB2-DB1	50	$ 3.50
ACCESSORIES (see pages 31-32)	**CAT. NO.**	**PCS./PKG.**	**LIST/PC.**	**CAT. NO.**	**PCS./PKG.**	**LIST/PC.**
End Barrier						
Grey, Non-Metallic (Installs on 35mm DIN Rail)	WTB2-EB	50	$ 1.50	WTB2-EB	50	$ 1.50
Grey, Non-Metallic (Installs on 32mm and 35mm DIN Rail)	WTB2-EB2	50	$ 1.50	WTB2-EB2	50	$ 1.50
Steel (Installs on 35mm DIN Rail)	WTB2-EB3	50	$ 1.50	WTB2-EB3	50	$ 1.50
End Plate	WTB2-EPFB52	50	$ 1.20	WTB2-EPDB1	50	$ 1.20
Partition Plate	WTB2-PPFB52	50	$ 1.30	—	—	—
Marker	WTB2-M8① or -M2②	100 / 100	$ 0.07 / $ 0.07	WTB2-M6	100	$ 0.07
Group Markers (see page 31)						
Plated Steel Mounting Rail, DIN						
35mm x 7.5mm - Slotted - 1 Meter	DRMR3	1	$ 9.70	DRMR3	1	$ 9.70
35mm x 7.5mm - Slotted - 2 Meters	DRMR6	10	$19.20	DRMR6	10	$19.20
35mm x 15mm - Slotted - 1 Meter	DRMR3D	1	$14.40	DRMR3D	1	$14.40
35mm x 15mm - Slotted - 2 Meters	DRMR6D	10	$27.60	DRMR6D	10	$27.60
Aluminum Mounting Rail, DIN						
35mm x 7.5mm - Slotted - 1 Meter	DRMR3A	1	$16.80	DRMR3A	1	$16.80
DIN Rail Support Bracket	WTB2-BRKT1	1	$ 1.60	WTB2-BRKT1	1	$ 1.60

①on terminal
②on fuse carrier

IEC POWER DISTRIBUTION TERMINAL BLOCKS

DISCOUNT SCHEDULE G

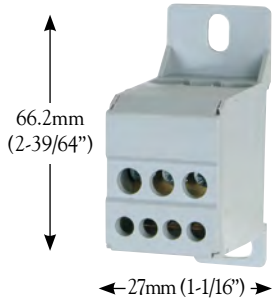

		WTB2-PDB80		
SPECIFICATIONS		**SINGLE-CIRCUIT TERMINAL BLOCK**		
Certifications		c RL us UL 1059 File #: E145984	IEC 60947-7-1	
Voltage Rating	(V)	600	630	
Maximum Current	(A)	80	76	
WIRE RANGE				
Stranded Conductor	mm²	Line / Load	3 x 6 - 16	
	mm²	Load Side	4 x 2.5 - 6	
AWG Conductor		Line / Load	3 x 8 - 4	
		Load Side	4 x 14 - 10	
Wire Strip Length	mm/in	Line / Load	20 / 10.79	
	mm/in	Load Side	10 / 0.39	
Tightening Torque	Nm	Line / Load	1.6 / 14	
	Nm	Load Side	0.8 / 7	
OPERATING TEMPERATURE				
Operating Temperature		-20 to +80° C (-4 to +176° F)		
ROHS COMPLIANCE		For RoHS compliance documentation by product, refer to www.c3controls.com		
TERMINAL BLOCKS		**CAT. NO.**	**PCS./PKG.**	**LIST/PC.**
(Standard) Grey		WTB2-PDB80	10	$17.00
ACCESSORIES (see pages 31-32)		**CAT. NO.**	**PCS./PKG.**	**LIST/PC.**
End Barrier				
Grey, Non-Metallic (Installs on 35mm DIN Rail)		WTB2-EB	50	$ 1.50
Grey, Non-Metallic (Installs on 32mm and 35mm DIN Rail)		WTB2-EB2	50	$ 1.50
Steel (Installs on 35mm DIN Rail)		WTB2-EB3	50	$ 1.50
Group Markers (see page 31)				
Plated Steel Mounting Rail, DIN				
35mm x 7.5mm - Slotted - 1 Meter		DRMR3	1	$ 9.70
35mm x 7.5mm - Slotted - 2 Meters		DRMR6	10	$19.20
35mm x 15mm - Slotted - 1 Meter		DRMR3D	1	$14.40
35mm x 15mm - Slotted - 2 Meters		DRMR6D	10	$27.60
Aluminum Mounting Rail, DIN				
35mm x 7.5mm - Slotted - 1 Meter		DRMR3A	1	$16.80
DIN Rail Support Bracket		WTB2-BRKT1	1	$ 1.60

Miniature Panel Mount, Feed-Through Screw Clamp Terminals

The miniature modular panel mounting screw clamp terminals ensure extremely compact wiring. The terminals are "add-on" and can be stacked to form multipole assemblies. The stacked assemblies are fitted with end plates on both ends for easy installation on to the panel. For assemblies of more than twenty terminals, additional end plates must be mounted after every twentieth terminal block for rigidity of the assembly.

IEC MINIATURE FEED THROUGH PANEL MOUNT TERMINAL BLOCKS

DISCOUNT SCHEDULE **G**

6mm (15/64") Width

28mm (1-7/64")

27mm (1-1/16")

		WTB2-MW4		
SPECIFICATIONS		**SINGLE-CIRCUIT TERMINAL BLOCK**		
Certifications		UL 1059 File #: E145984		IEC 60947-7-1
Voltage Rating	(V)	300		400
Maximum Current	(A)	35		32
WIRE RANGE				
Solid Strand Conductor	mm²	0.5 - 6		
Fine Strand Conductor	mm²	0.5 - 4		
AWG Conductor		22 - 10		—
Wire Strip Length	(mm/inches)	9 / 0.35		
Tightening Torque (for Terminal Block)	(Nm/Lb-in)	0.5 / 7		
Tightening Torque (for Terminal Block)	(Nm/Lb-in)	0.2 / 1.77		
OPERATING TEMPERATURE				
Operating Temperature		-20 to +80° C (-4 to +176° F)		
ROHS COMPLIANCE		For RoHS compliance documentation by product, refer to www.c3controls.com		
TERMINAL BLOCKS		**CAT. NO.**	**PCS./PKG.**	**LIST/PC.**
	(Standard) Grey	WTB2-MW4	100	$ 1.00
ACCESSORIES (see pages 31-32)		**CAT. NO.**	**PCS./PKG.**	**LIST/PC.**
Circuit Bridge	2 Position	WTB2-W4/2CB	10	$ 2.20
	3 Position	WTB2-W4/3CB	10	$ 3.20
	4 Position	WTB2-W4/4CB	10	$ 4.20
	10 Position	WTB2-W4/10CB	10	$ 9.80
End Plate		WTB2-EPMW4	50	$ 0.65
Marker		WTB2-M2	100	$ 0.07
Group Markers (see page 31)				

IEC FEED THROUGH DIN RAIL TERMINAL BLOCKS

5mm (3/16") Width

36mm (1-13/32")

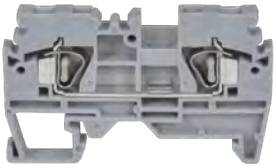

58mm (2-9/32")

6mm (15/64") Width

42mm (1-21/32")

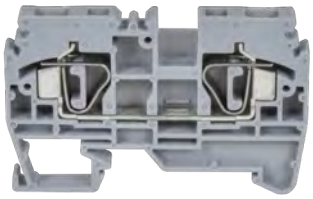

65mm (2-35/64")

DISCOUNT SCHEDULE **G**

	WTB2S-W2			WTB2S-W4		
SPECIFICATIONS	**SINGLE-CIRCUIT TERMINAL BLOCK**			**SINGLE-CIRCUIT TERMINAL BLOCK**		
Certifications	c UL us UL 1059 File #: E145984	CE IEC 60947-7-1		c UL us UL 1059 File #: E145984	CE IEC 60947-7-1	
Voltage Rating (V)	600	750		600	750	
Maximum Current (A)	20	24		25	32	
WIRE RANGE						
Solid Strand Conductor mm^2	0.5 - 4			0.5 - 6		
Fine Strand Conductor mm^2	0.5 - 2.5			0.5 - 4		
AWG Conductor	22 - 14			22 - 12		
Wire Strip Length (mm/inches)	9 / 0.35			9 / 0.35		
OPERATING TEMPERATURE						
Operating Temperature	-20 to +80° C (-4 to +176° F)			-20 to +80° C (-4 to +176° F)		
ROHS COMPLIANCE	For RoHS compliance documentation by product, refer to www.c3controls.com					
TERMINAL BLOCKS	**CAT. NO.**	**PCS./PKG.**	**LIST/PC.**	**CAT. NO.**	**PCS./PKG.**	**LIST/PC.**
(Standard) Grey	WTB2S-W2	100	$ 0.80	WTB2S-W4	50	$ 0.95
Black	WTB2S-W2-BK	100	$ 0.90	WTB2S-W4-BK	50	$ 1.10
Blue	WTB2S-W2-BE	100	$ 0.90	WTB2S-W4-BE	50	$ 1.10
Green	WTB2S-W2-GN	100	$ 0.90	WTB2S-W4-GN	50	$ 1.10
Orange	WTB2S-W2-OR	100	$ 0.90	WTB2S-W4-OR	50	$ 1.10
Red	WTB2S-W2-RD	100	$ 0.90	WTB2S-W4-RD	50	$ 1.10
White	WTB2S-W2-WH	100	$ 0.90	WTB2S-W4-WH	50	$ 1.10
Yellow	WTB2S-W2-YW	100	$ 0.90	WTB2S-W4-YW	50	$ 1.10
ACCESSORIES (see pages 31-32)	**CAT. NO.**	**PCS./PKG.**	**LIST/PC.**	**CAT. NO.**	**PCS./PKG.**	**LIST/PC.**
End Barrier						
Grey, Non-Metallic (Installs on 35mm DIN Rail)	WTB2-EB	50	$ 1.50	WTB2-EB	50	$ 1.50
Grey, Non-Metallic (Installs on 32mm and 35mm DIN Rail)	WTB2-EB2	50	$ 1.50	WTB2-EB2	50	$ 1.50
Steel (Installs on 35mm DIN Rail)	WTB2-EB3	50	$ 1.50	WTB2-EB3	50	$ 1.50
Circuit Bridge						
(for adjacent terminal blocks) 2 Position	WTB2S-W2/2CB	100	$ 0.75	WTB2S-W4/2CB	100	$ 0.95
(for alternate terminal blocks) 2 Position	WTB2S-W2/2AB	100	$ 0.75	WTB2S-W4/2AB	100	$ 0.95
End Plate	WTB2S-EPW2	50	$ 0.45	WTB2S-EPW4	50	$ 0.50
Partition Plate	WTB2S-PPW2	50	$ 0.48	WTB2S-PPW4	50	$ 0.55
Marker	WTB2-M5	100	$ 0.07	WTB2-M6	100	$ 0.07
Group Markers (see page 31)						
Plated Steel Mounting Rail, DIN						
35mm x 7.5mm - Slotted - 1 Meter	DRMR3	1	$ 9.70	DRMR3	1	$ 9.70
35mm x 7.5mm - Slotted - 2 Meters	DRMR6	10	$19.20	DRMR6	10	$19.20
35mm x 15mm - Slotted - 1 Meter	DRMR3D	1	$14.40	DRMR3D	1	$14.40
35mm x 15mm - Slotted - 2 Meters	DRMR6D	10	$27.60	DRMR6D	10	$27.60
Aluminum Mounting Rail, DIN						
35mm x 7.5mm - Slotted - 1 Meter	DRMR3A	1	$16.80	DRMR3A	1	$16.80
DIN Rail Support Bracket	WTB2-BRKT1	1	$ 1.60	WTB2-BRKT1	1	$ 1.60

See bottom of page 23 for color options.

IEC Feed Through DIN Rail Terminal Blocks

c3controls WTB2 Series of feed through spring clamp terminal blocks have been designed to meet the strict specifications and standards of UL, CSA, and IEC. The WTB2 Series of terminal blocks is manufactured with a direct mounting foot for 35mm standard DIN rails.

In addition to the mounting feature, the WTB2 Series is constructed using only the best available materials for both the housing and clamping bodies and parts. The housing is molded out of an unbreakable, high quality, V-0 flame resistant thermoplastic. The metal bodies are made of a high quality zinc plated, brass and electrolytic copper to provide excellent conductivity and minimize corrosion problems.

The WTB2 Series accepts wires as small as 0.5mm^2 (22 AWG) and as large as 10mm^2 (8 AWG), up to 50 Amps. The wiring to the terminal blocks is made easy by the funnel entry design of the housing. Accessories such as circuit bridges, end plates, partition plates, and markers make the WTB2 Series a flexible alternative to any feed through wiring or power distribution application.

SPECIAL FEATURES

c3controls spring clamp Terminal Blocks reduce installed costs and ensure reliable connections!

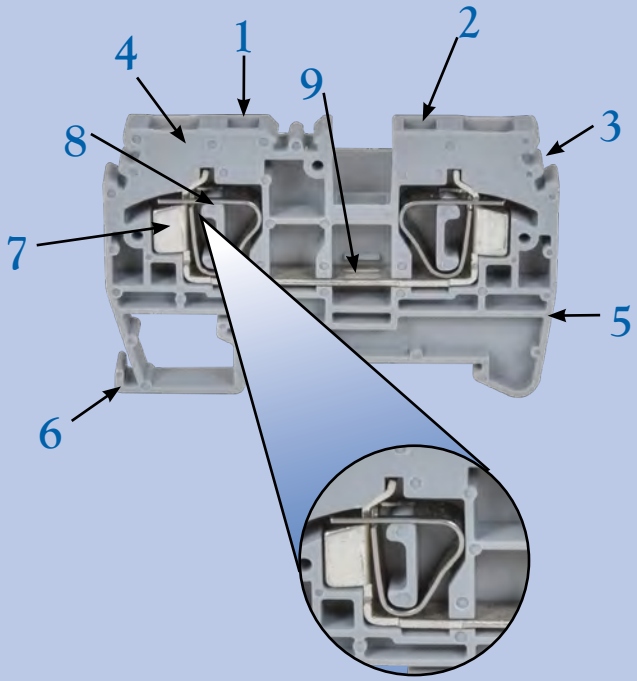

1. Construction provides IP20 protection to guard against accidental contact with live parts — even with accessories installed.
2. Convenient top wiring. The spring clamp is opened with commonly available screwdrivers, enabling the conductor to be easily inserted in the opening of the spring clamp.
3. Marking system allows for fast and easy circuit identification. Blank, custom, and standard markers are available.
4. Funneled-wiring entry with finger safe IP20 terminals simplifies wiring for fast and easy installations.
5. Housing is molded out of an unbreakable, high quality, V-0 flame resistant thermoplastic. Available in eight colors: grey, black, blue, green, orange, red, white, and yellow for quick identification of control circuit types.
6. DIN rail mounting foot allows for direct mounting on 35mm DIN rails and is designed for easy snap on, snap off assembly — the most sturdy and rugged mounting foot on the market!
7. Our zinc and electroplated clamping yokes and current bars provide superior conductivity, superb corrosion resistance in normal and hazardous environments, and in conjunction with the stainless steel spring clamp are vibration resistant.
8. Pre-loaded 302 stainless steel spring clamps hold the wire securely against the current bar, and won't loosen, even in high vibration applications.
9. Internal jumpers (circuit bridges) are available for adjacent and alternate terminal blocks, which frees up valuable wiring space and reduces assembly time.

Additional Colors Available for IEC Terminal Blocks

IEC FEED THROUGH DIN RAIL TERMINAL BLOCKS

DISCOUNT SCHEDULE G

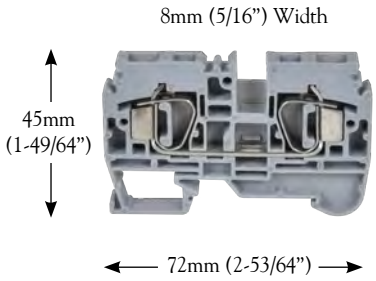

	WTB2S-W6		
SPECIFICATIONS	**SINGLE-CIRCUIT TERMINAL BLOCK**		
Certifications	UL 1059 File #: E145984	IEC 60947-7-1	
Voltage Rating (V)	600	750	
Maximum Current (A)	50	41	
WIRE RANGE			
Solid Strand Conductor mm²	0.5 - 10		
Fine Strand Conductor mm²	0.5 - 6		
AWG Conductor	22 - 8		
Wire Strip Length (mm/inches)	12 / 0.47		
OPERATING TEMPERATURE			
Operating Temperature	-20 to +80° C (-4 to +176° F)		
ROHS COMPLIANCE	For RoHS compliance documentation by product, refer to www.c3controls.com		
TERMINAL BLOCKS	**CAT. NO.**	**PCS./PKG.**	**LIST/PC.**
(Standard) Grey	WTB2S-W6	50	$ 1.30
Black	WTB2S-W6-BK	50	$ 1.40
Blue	WTB2S-W6-BE	50	$ 1.40
Green	WTB2S-W6-GN	50	$ 1.40
Orange	WTB2S-W6-OR	50	$ 1.40
Red	WTB2S-W6-RD	50	$ 1.40
White	WTB2S-W6-WH	50	$ 1.40
Yellow	WTB2S-W6-YW	50	$ 1.40
ACCESSORIES (see pages 31-32)	**CAT. NO.**	**PCS./PKG.**	**LIST/PC.**
End Barrier			
Grey, Non-Metallic (Installs on 35mm DIN Rail)	WTB2-EB	50	$ 1.50
Grey, Non-Metallic (Installs on 32mm and 35mm DIN Rail)	WTB2-EB2	50	$ 1.50
Steel (Installs on 35mm DIN Rail)	WTB2-EB3	50	$ 1.50
Circuit Bridge			
(for adjacent terminal blocks) 2 Position	WTB2S-W6/2CB	100	$ 1.20
(for alternate terminal blocks) 2 Position	WTB2S-W6/2AB	100	$ 1.20
End Plate	WTB2S-EPW6	50	$ 0.44
Partition Plate	WTB2S-PPW6	50	$ 0.48
Marker	WTB2-M8	100	$ 0.07
Group Markers (see page 31)			
Plated Steel Mounting Rail, DIN			
35mm x 7.5mm - Slotted - 1 Meter	DRMR3	1	$ 9.70
35mm x 7.5mm - Slotted - 2 Meters	DRMR6	10	$19.20
35mm x 15mm - Slotted - 1 Meter	DRMR3D	1	$14.40
35mm x 15mm - Slotted - 2 Meters	DRMR6D	10	$27.60
Aluminum Mounting Rail, DIN			
35mm x 7.5mm - Slotted - 1 Meter	DRMR3A	1	$16.80
DIN Rail Support Bracket	WTB2-BRKT1	1	$ 1.60

See bottom of page 23 for color options.

Spring Clamp Ground Terminals

Spring clamp ground terminal blocks are offered for quick connections and are ideal for use with other spring clamp terminal blocks. The spring clamp is operated by using a screwdriver to provide access for wiring through the opening in the spring clamp. The wire is held against current bar directly by a pre-stressed spring clamp. Specially designed alloy feet help to achieve very low contact resistance and vibration proof grounding. Spring clamp ground terminals can be mounted on 35mm DIN rails along with other terminals, and eliminate the need for a separate grounding bus bar. The ground terminal block profile is the same as the feed through terminal blocks of same wire size.

IEC GROUND DIN RAIL TERMINAL BLOCKS

DISCOUNT SCHEDULE **G**

5mm (3/16") Width

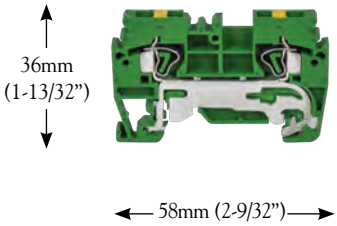

6mm (15/64") Width

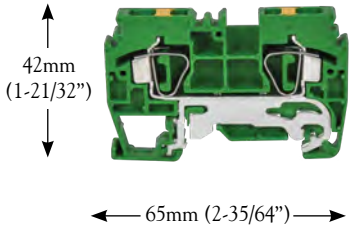

	WTB2S-W2G			WTB2S-W4G		
SPECIFICATIONS	**SINGLE-CIRCUIT TERMINAL BLOCK**			**SINGLE-CIRCUIT TERMINAL BLOCK**		
Certifications	UL 1059 File #: E145984	IEC 60947-7-2		UL 1059 File #: E145984	IEC 60947-7-2	
WIRE RANGE						
Solid Strand Conductor mm²	0.5 - 4			0.5 - 6		
Fine Strand Conductor mm²	0.5 - 2.5			0.5 - 4		
AWG Conductor	22 - 14			22 - 12		
Wire Strip Length (mm/inches)	9 / 0.35			9 / 0.35		
OPERATING TEMPERATURE						
Operating Temperature	-20 to +80° C (-4 to +176° F)			-20 to +80° C (-4 to +176° F)		
ROHS COMPLIANCE	For RoHS compliance documentation by product, refer to www.c3controls.com					
TERMINAL BLOCKS	**CAT. NO.**	**PCS./PKG.**	**LIST/PC.**	**CAT. NO.**	**PCS./PKG.**	**LIST/PC.**
Green insulation housing with metal mounting foot.	WTB2S-W2G	100	$ 3.10	WTB2S-W4G	50	$ 3.50
ACCESSORIES (see pages 31-32)	**CAT. NO.**	**PCS./PKG.**	**LIST/PC.**	**CAT. NO.**	**PCS./PKG.**	**LIST/PC.**
End Barrier						
Grey, Non-Metallic (Installs on 35mm DIN Rail)	WTB2-EB	50	$ 1.50	WTB2-EB	50	$ 1.50
Grey, Non-Metallic (Installs on 32mm and 35mm DIN Rail)	WTB2-EB2	50	$ 1.50	WTB2-EB2	50	$ 1.50
Steel (Installs on 35mm DIN Rail)	WTB2-EB3	50	$ 1.50	WTB2-EB3	50	$ 1.50
End Plate	—	—	—	WTB2S-EPW4	50	$ 0.50
Marker	WTB2-M5	100	$ 0.07	WTB2-M6	100	$ 0.07
Group Markers (see page 31)						
Plated Steel Mounting Rail, DIN						
35mm x 7.5mm - Slotted - 1 Meter	DRMR3	1	$ 9.70	DRMR3	1	$ 9.70
35mm x 7.5mm - Slotted - 2 Meters	DRMR6	10	$19.20	DRMR6	10	$19.20
35mm x 15mm - Slotted - 1 Meter	DRMR3D	1	$14.40	DRMR3D	1	$14.40
35mm x 15mm - Slotted - 2 Meters	DRMR6D	10	$27.60	DRMR6D	10	$27.60
Aluminum Mounting Rail, DIN						
35mm x 7.5mm - Slotted - 1 Meter	DRMR3A	1	$16.80	DRMR3A	1	$16.80
DIN Rail Support Bracket	WTB2-BRKT1	1	$ 1.60	WTB2-BRKT1	1	$ 1.60

IEC GROUND DIN RAIL TERMINAL BLOCKS

DISCOUNT SCHEDULE **G**

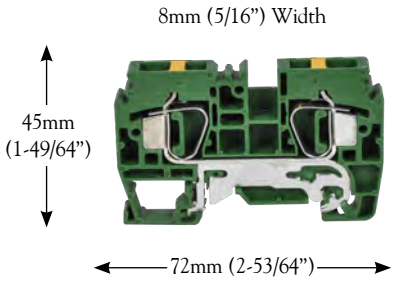

	WTB2S-W6G		
SPECIFICATIONS	**SINGLE-CIRCUIT TERMINAL BLOCK**		
Certifications	c UL us UL 1059 File #: E145984	IEC 60947-7-2	
WIRE RANGE			
Solid Strand Conductor mm^2	0.5 - 10		
Fine Strand Conductor mm^2	0.5 - 6		
AWG Conductor	22 - 8		
Wire Strip Length (mm/inches)	12 / 0.47		
OPERATING TEMPERATURE			
Operating Temperature	-20 to +80° C (-4 to +176° F)		
ROHS COMPLIANCE	For RoHS compliance documentation by product, refer to www.c3controls.com		
TERMINAL BLOCKS	**CAT. NO.**	**PCS./PKG.**	**LIST/PC.**
Green insulation housing with metal mounting foot	WTB2S-W6G	50	$ 4.70
ACCESSORIES (see pages 31-32)	**CAT. NO.**	**PCS./PKG.**	**LIST/PC.**
End Barrier			
Grey, Non-Metallic (Installs on 35mm DIN Rail)	WTB2-EB	50	$ 1.50
Grey, Non-Metallic (Installs on 32mm and 35mm DIN Rail)	WTB2-EB2	50	$ 1.50
Steel (Installs on 35mm DIN Rail)	WTB2-EB3	50	$ 1.50
Marker	WTB2-M8	100	$ 0.07
Group Markers (see page 31)			
Plated Steel Mounting Rail, DIN			
35mm x 7.5mm - Slotted - 1 Meter	DRMR3	1	$ 9.70
35mm x 7.5mm - Slotted - 2 Meters	DRMR6	10	$19.20
35mm x 15mm - Slotted - 1 Meter	DRMR3D	1	$14.40
35mm x 15mm - Slotted - 2 Meters	DRMR6D	10	$27.60
Aluminum Mounting Rail, DIN			
35mm x 7.5mm - Slotted - 1 Meter	DRMR3A	1	$16.80
DIN Rail Support Bracket	WTB2-BRKT1	1	$ 1.60

Multi-Conductor Spring Clamp

The multi-conductor spring clamp terminals offer a reliable solution for multiple wire connections. The terminal eliminates conventional cross connections, looping wires and reliability problems encountered when connecting two wires in one clamp. The terminals provide multiple connection points in the terminal itself, and the possibility of further multiplication of connections with circuit bridges. The multi-conductor terminal blocks can even be bridged to standard feed through spring clamp terminal blocks of same conductor size.

WTB2S-W2-12, WTB2S-W4-12 and WTB2S-W6-12 features one termination point on one side and two termination points on the other side, while the WTB2S-W2-22, WTB2S-W4-22 and WTB2S-W6-22 have two termination points on each side. Bridging facility is at the center of the terminals.

IEC MULTI-CONDUCTOR FEED THROUGH DIN RAIL TERMINAL BLOCKS

DISCOUNT SCHEDULE G

5mm (3/16") Width

36mm (1-13/32")

74mm (2-29/32")

5mm (3/16") Width

36mm (1-13/32")

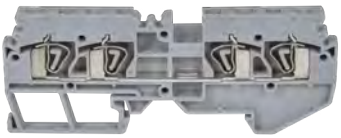

89.8mm (3-17/32")

	WTB2S-W2-12			WTB2S-W2-22		
SPECIFICATIONS	**SINGLE-CIRCUIT TERMINAL BLOCK**			**SINGLE-CIRCUIT TERMINAL BLOCK**		
Certifications	c UL us UL 1059 File #: E145984	IEC 60947-7-1		c UL us UL 1059 File #: E145984	IEC 60947-7-1	
Voltage Rating (V)	600	750		600	750	
Maximum Current (A)	20	24		20	24	
WIRE RANGE						
Solid Strand Conductor mm^2	0.5 - 4			0.5 - 4		
Fine Strand Conductor mm^2	0.5 - 2.5			0.5 - 2.5		
AWG Conductor	22 - 14			22 - 14		
Wire Strip Length (mm/inches)	9 / 0.35			9 / 0.35		
OPERATING TEMPERATURE						
Operating Temperature	-20 to +80° C (-4 to +176° F)			-20 to +80° C (-4 to +176° F)		
ROHS COMPLIANCE	For RoHS compliance documentation by product, refer to www.c3controls.com					
TERMINAL BLOCKS	**CAT. NO.**	**PCS./PKG.**	**LIST/PC.**	**CAT. NO.**	**PCS./PKG.**	**LIST/PC.**
(Standard) Grey	WTB2S-W2-12	100	$ 1.20	WTB2S-W2-22	100	$ 1.44
ACCESSORIES (see pages 31-32)	**CAT. NO.**	**PCS./PKG.**	**LIST/PC.**	**CAT. NO.**	**PCS./PKG.**	**LIST/PC.**
End Barrier						
Grey, Non-Metallic (Installs on 35mm DIN Rail)	WTB2-EB	50	$ 1.50	WTB2-EB	50	$ 1.50
Grey, Non-Metallic (Installs on 32mm and 35mm DIN Rail)	WTB2-EB2	50	$ 1.50	WTB2-EB2	50	$ 1.50
Steel (Installs on 35mm DIN Rail)	WTB2-EB3	50	$ 1.50	WTB2-EB3	50	$ 1.50
Circuit Bridge						
(for adjacent terminal blocks) 2 Position	WTB2S-W2/2CB	100	$ 0.75	WTB2S-W2/2CB	100	$ 0.75
(for alternate terminal blocks) 2 Position	WTB2S-W2/2AB	100	$ 0.75	WTB2S-W2/2AB	100	$ 0.75
End Plate	WTB2S-EPW2-12	50	$ 0.60	WTB2S-EPW2-22	50	$ 0.60
Partition Plate	WTB2S-PPW2-12	50	$ 0.65	WTB2S-PPW2-22	50	$ 0.65
Marker	WTB2-M5	100	$ 0.07	WTB2-M5	100	$ 0.07
Group Markers (see page 31)						
Plated Steel Mounting Rail, DIN						
35mm x 7.5mm - Slotted - 1 Meter	DRMR3	1	$ 9.70	DRMR3	1	$ 9.70
35mm x 7.5mm - Slotted - 2 Meters	DRMR6	10	$19.20	DRMR6	10	$19.20
35mm x 15mm - Slotted - 1 Meter	DRMR3D	1	$14.40	DRMR3D	1	$14.40
35mm x 15mm - Slotted - 2 Meters	DRMR6D	10	$27.60	DRMR6D	10	$27.60
Aluminum Mounting Rail, DIN						
35mm x 7.5mm - Slotted - 1 Meter	DRMR3A	1	$16.80	DRMR3A	1	$16.80
DIN Rail Support Bracket	WTB2-BRKT1	1	$ 1.60	WTB2-BRKT1	1	$ 1.60

IEC MULTI-CONDUCTOR FEED THROUGH DIN RAIL TERMINAL BLOCKS

6mm (15/64") Width

42mm (1-21/32")

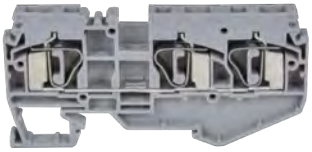

84.6mm (3-21/64")

6mm (15/64") Width

42mm (1-21/32")

105mm (4-1/8")

DISCOUNT SCHEDULE **G**

	WTB2S-W4-12			WTB2S-W4-22		
SPECIFICATIONS	**SINGLE-CIRCUIT TERMINAL BLOCK**			**SINGLE-CIRCUIT TERMINAL BLOCK**		
Certifications	c UL us UL 1059 File #: E145984	IEC 60947-7-1		c UL us UL 1059 File #: E145984	IEC 60947-7-1	
Voltage Rating (V)	600	750		600	750	
Maximum Current (A)	25	32		25	32	
WIRE RANGE						
Solid Strand Conductor mm^2	0.5 - 6			0.5 - 6		
Fine Strand Conductor mm^2	0.5 - 4			0.5 - 4		
AWG Conductor	22 - 12			22 - 12		
Wire Strip Length (mm/inches)	9 / 0.35			9 / 0.35		
OPERATING TEMPERATURE						
Operating Temperature	-20 to +80° C (-4 to +176° F)			-20 to +80° C (-4 to +176° F)		
ROHS COMPLIANCE	For RoHS compliance documentation by product, refer to www.c3controls.com					
TERMINAL BLOCKS	**CAT. NO.**	**PCS./PKG.**	**LIST/PC.**	**CAT. NO.**	**PCS./PKG.**	**LIST/PC.**
(Standard) Grey	WTB2S-W4-12	100	$ 2.00	WTB2S-W4-22	100	$ 2.50
ACCESSORIES (see pages 31-32)	**CAT. NO.**	**PCS./PKG.**	**LIST/PC.**	**CAT. NO.**	**PCS./PKG.**	**LIST/PC.**
End Barrier						
Grey, Non-Metallic (Installs on 35mm DIN Rail)	WTB2-EB	50	$ 1.50	WTB2-EB	50	$ 1.50
Grey, Non-Metallic (Installs on 32mm and 35mm DIN Rail)	WTB2-EB2	50	$ 1.50	WTB2-EB2	50	$ 1.50
Steel (Installs on 35mm DIN Rail)	WTB2-EB3	50	$ 1.50	WTB2-EB3	50	$ 1.50
Circuit Bridge						
(for adjacent terminal blocks) 2 Position	WTB2S-W4/2CB	100	$ 0.95	WTB2S-W4/2CB	100	$ 0.95
(for alternate terminal blocks) 2 Position	WTB2S-W4/2AB	100	$ 0.95	WTB2S-W4/2AB	100	$ 0.95
End Plate	WTB2S-EPW4-12	50	$ 0.65	WTB2S-EPW4-22	50	$ 0.65
Partition Plate	WTB2S-PPW4-12	50	$ 0.70	WTB2S-PPW4-22	50	$ 0.70
Marker	WTB2-M6	100	$ 0.07	WTB2-M6	100	$ 0.07
Group Markers (see page 31)						
Plated Steel Mounting Rail, DIN						
35mm x 7.5mm - Slotted - 1 Meter	DRMR3	1	$ 9.70	DRMR3	1	$ 9.70
35mm x 7.5mm - Slotted - 2 Meters	DRMR6	10	$19.20	DRMR6	10	$19.20
35mm x 15mm - Slotted - 1 Meter	DRMR3D	1	$14.40	DRMR3D	1	$14.40
35mm x 15mm - Slotted - 2 Meters	DRMR6D	10	$27.60	DRMR6D	10	$27.60
Aluminum Mounting Rail, DIN						
35mm x 7.5mm - Slotted - 1 Meter	DRMR3A	1	$16.80	DRMR3A	1	$16.80
DIN Rail Support Bracket	WTB2-BRKT1	1	$ 1.60	WTB2-BRKT1	1	$ 1.60

IEC MULTI-CONDUCTOR FEED THROUGH DIN RAIL TERMINAL BLOCKS

DISCOUNT SCHEDULE G

8mm (5/16") Width

8mm (5/16") Width

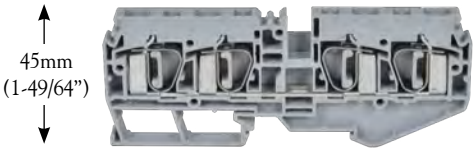

	WTB2S-W6-12			WTB2S-W6-22		
SPECIFICATIONS	**SINGLE-CIRCUIT TERMINAL BLOCK**			**SINGLE-CIRCUIT TERMINAL BLOCK**		
Certifications	UL 1059 File #: E145984	CE IEC 60947-7-1		UL 1059 File #: E145984	CE IEC 60947-7-1	
Voltage Rating (V)	600	750		600	750	
Maximum Current (A)	50	41		50	41	
WIRE RANGE						
Solid Strand Conductor mm^2	0.5 - 10			0.5 - 10		
Fine Strand Conductor mm^2	0.5 - 6			0.5 - 6		
AWG Conductor	22 - 8			22 - 8		
Wire Strip Length (mm/inches)	12 / 0.47			12 / 0.47		
OPERATING TEMPERATURE						
Operating Temperature	-20 to +80° C (-4 to +176° F)			-20 to +80° C (-4 to +176° F)		
ROHS COMPLIANCE	For RoHS compliance documentation by product, refer to www.c3controls.com					
TERMINAL BLOCKS	**CAT. NO.**	**PCS./PKG.**	**LIST/PC.**	**CAT. NO.**	**PCS./PKG.**	**LIST/PC.**
(Standard) Grey	WTB2S-W6-12	50	$ 2.65	WTB2S-W6-22	50	$ 3.40
ACCESSORIES (see pages 31-32)	**CAT. NO.**	**PCS./PKG.**	**LIST/PC.**	**CAT. NO.**	**PCS./PKG.**	**LIST/PC.**
End Barrier						
Grey, Non-Metallic (Installs on 35mm DIN Rail)	WTB2-EB	50	$ 1.50	WTB2-EB	50	$ 1.50
Grey, Non-Metallic (Installs on 32mm and 35mm DIN Rail)	WTB2-EB2	50	$ 1.50	WTB2-EB2	50	$ 1.50
Steel (Installs on 35mm DIN Rail)	WTB2-EB3	50	$ 1.50	WTB2-EB3	50	$ 1.50
Circuit Bridge						
(for adjacent terminal blocks) 2 Position	WTB2S-W6/2CB	100	$ 1.30	WTB2S-W6/2CB	100	$ 1.30
(for alternate terminal blocks) 2 Position	WTB2S-W6/2AB	100	$ 1.30	WTB2S-W6/2AB	100	$ 1.30
End Plate	WTB2S-EPW6-12	50	$ 0.90	WTB2S-EPW6-22	50	$ 0.90
Partition Plate	WTB2S-PPW6-12	50	$ 1.00	WTB2S-PPW6-22	50	$ 1.00
Marker	WTB2-M8	100	$ 0.07	WTB2-M8	100	$ 0.07
Group Markers (see page 31)						
Plated Steel Mounting Rail, DIN						
35mm x 7.5mm - Slotted - 1 Meter	DRMR3	1	$ 9.70	DRMR3	1	$ 9.70
35mm x 7.5mm - Slotted - 2 Meters	DRMR6	10	$19.20	DRMR6	10	$19.20
35mm x 15mm - Slotted - 1 Meter	DRMR3D	1	$14.40	DRMR3D	1	$14.40
35mm x 15mm - Slotted - 2 Meters	DRMR6D	10	$27.60	DRMR6D	10	$27.60
Aluminum Mounting Rail, DIN						
35mm x 7.5mm - Slotted - 1 Meter	DRMR3A	1	$16.80	DRMR3A	1	$16.80
DIN Rail Support Bracket	WTB2-BRKT1	1	$ 1.60	WTB2-BRKT1	1	$ 1.60

Miniature Panel Mount, Feed-Through Spring Clamp Terminals

The miniature modular panel mounting spring clamp terminals ensure extremely compact wiring. The terminals are "add-on" and can be stacked to form multipole assemblies. The stacked assemblies are fitted with end plates on both ends for easy installation on to the panel. For assemblies of more than twenty terminals, additional end plates must be mounted after every twentieth terminal block for rigidity of the assembly. Miniature multi-conductor terminals are also available as a reliable solution for multiple wire connections. The terminal eliminates conventional cross connections, looping wires and reliability problems encountered when connecting two wires in one clamp. WTB2S-MW2-22 features two termination points on each side.

IEC MINIATURE FEED THROUGH PANEL MOUNT TERMINAL BLOCKS

DISCOUNT SCHEDULE G

5mm (3/16") Width

27mm (1-1/16")

35mm (1-3/8")

10mm (25/64") Width

27mm (1-1/16")

35mm (1-3/8")

	WTB2S-MW2			WTB2S-MW2-22		
SPECIFICATIONS	**SINGLE-CIRCUIT TERMINAL BLOCK**			**SINGLE-CIRCUIT, MULTI-CONDUCTOR TERMINAL BLOCK**		
Certifications	UL 1059 File #: E145984	IEC 60947-7-1		UL 1059 File #: E145984	IEC 60947-7-1	
Voltage Rating (V)	600	750		600	750	
Maximum Current (A)	20	24		20	24	
WIRE RANGE						
Solid Strand Conductor mm^2	0.5 - 4			0.5 - 4		
Fine Strand Conductor mm^2	0.5 - 2.5			0.5 - 2.5		
AWG Conductor	22 - 14			22 - 14		
Wire Strip Length (mm/inches)	9 / 0.35			9 / 0.35		
OPERATING TEMPERATURE						
Operating Temperature	-20 to +80° C (-4 to +176° F)			-20 to +80° C (-4 to +176° F)		
ROHS COMPLIANCE	For RoHS compliance documentation by product, refer to www.c3controls.com					
TERMINAL BLOCKS	**CAT. NO.**	**PCS./PKG.**	**LIST/PC.**	**CAT. NO.**	**PCS./PKG.**	**LIST/PC.**
(Standard) Grey	WTB2S-MW2	50	$0.90	WTB2S-MW2-22	50	$1.40
ACCESSORIES (See pages 31-32)	**CAT. NO.**	**PCS./PKG.**	**LIST/PC.**	**CAT. NO.**	**PCS./PKG.**	**LIST/PC.**
Circuit Bridge						
(for adjacent terminal blocks) 2 Position	WTB2S-MW2/2CB	100	$0.75	WTB2S-MW2/2CB	100	$0.75
Circuit Bridge Installation Tool	WTB2S-TMW2	1	$5.40	WTB2S-TMW2	1	$5.40
End Plate	WTB2S-EPMW2	50 (pair)	$0.65	WTB2S-EPMW2	50 (pair)	$0.65
Marker	WTB2-M5A	100	$0.07	WTB2-M10A	100	$0.07
Group Markers (See page 31)						

END PLATES

Our end plates enclose the open side of the last terminal block in a rail assembly to provide isolation from adjacent equipment and circuits. May also be used as a separator to divide circuits in a terminal block rail assembly. *See applicable terminal block page for end plate part number and ordering information.*

SEPARATOR PLATES

Our separator plate is used to divide circuits in a terminal block rail assembly. *See applicable terminal block page for separator plate part number and ordering information.*

PARTITION PLATES

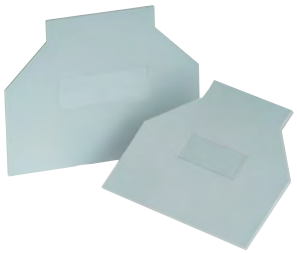

Our partition plates are used to identify and segregate terminal block groups. In addition, they maintain the required creepage and clearance for electrical isolation. *See applicable terminal block page for partition plate part number and ordering information.*

END BARRIERS

Our end barriers retain the terminal blocks on the mounting rail and have a Tightening Torque of 0.8/7 (Nm/lb-in). *See applicable terminal block page for end barrier part number and ordering information.*

DIN RAIL

We offer two types of 35mm symmetrical DIN rails; steel and aluminum. Our steel DIN rail is zinc with clear chromate plated and is available in either 1m (3.28ft.) or 2m (6.56ft.). The aluminum version is available in 1m (3.28ft.). Each simply fasten by screws to the mounting surface - no special brackets or hardware are needed. Terminal blocks easily snap on to rail. *See applicable terminal block page for DIN rail part number and ordering information.*

DIN RAIL SUPPORT BRACKET

Angled bracket raises DIN rail off of mounting panel for easier more convenient wiring of terminal blocks. *See applicable terminal block page for support bracket part number and ordering information.*

DISCOUNT SCHEDULE **G**

CIRCUIT BRIDGES

Internal, Insulated – for Screw Clamp Connection Terminal Blocks

Use our insulated circuit bridges to electrically connect multiple terminal blocks. Our circuit bridges are pre-assembled and available in 2-, 3-, 4-, and 10-position. *See applicable terminal block page for circuit bridge part number and ordering information.*

Insulated Push-In – for Spring Clamp Connection Terminal Blocks

for use with alternate terminal blocks

for use with adjacent terminal blocks

Our insulated push-in circuit bridges provide IP20 protection and simplify the task of cross connection between multiple terminal blocks. Circuit bridges are available for connections between adjacent and alternate terminal blocks. *See applicable terminal block page for circuit bridge part number and ordering information.*

CIRCUIT BRIDGE INSTALLATION AND REMOVAL TOOL

For easy installation and removal of circuit bridges with adjacent terminal blocks. *See applicable terminal block page for circuit bridge installation tool part number and ordering information.*

GROUP MARKERS

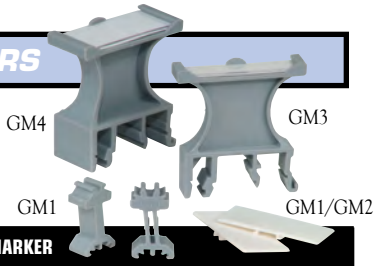

Our group markers and group marker holders are used to identify an assembly of adjacent terminals that are associated with a specific function, control circuit, or part of a machine.

GROUP MARKER HOLDER				MARKER		
CODE	PCS./PKG.	LIST/PC.	FOR USE WITH	CODE	PCS./PKG.	LIST/PC.
WTB2-GM1	100	$0.90	WTB2-EB End Barrier	WTB2-M8 WTB2-MGM1	100 100	$0.70 $0.90
WTB2-GM2	100	$0.90	WTB2-EB2 End Barrier	WTB2-M8 WTB2-MGM1	100 100	$0.70 $0.90
WTB2-GM3①	100	$0.90	32mm or 35mm DIN Rail	—	—	—
WTB2-GM4①	100	$0.90	32mm or 35mm DIN Rail	—	—	—

① Includes a paper label.

IT'S EASY TO BUILD YOUR OWN TERMINAL MARKERS

Simply pick the code number from each of the sections below and combine them to build your part number.

IEC Terminal Block Markers

WTB2 – _____ _____ _____ _____

I *II* *III* *IV* *V*

Example: To build one of our most popular Terminal Markers, the part number would be **WTB2 + II + III + IV + V** or **WTB2-M5LIAVL**

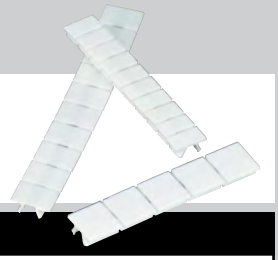

I. MARKER TYPE

CODE	DESCRIPTION
WTB2	IEC Terminal Block Marker

II. MARKER DIMENSION

CODE	DESCRIPTION (W X HT)	MARKERS PER STRIP	STRIPS PER PKG.	MARKERS PER PKG.	LIST EACH PER MARKER (BLANK)	LIST EACH PER MARKER (PRINTED)
M2	6mm x 5mm Marker	10	10	100	$0.07	$0.32
M5A	5mm x 5mm Marker	10	10	100	$0.07	$0.32
M5	5mm x 10mm Marker	10	10	100	$0.07	$0.32
M6	6mm x 10mm Marker	10	10	100	$0.07	$0.32
M8	8mm x 11mm Marker	10	10	100	$0.07	$0.32
M9	9mm x 10mm Marker	10	10	100	$0.11	$0.37
M10A	10mm x 5mm Marker	10	10	100	$0.07	$0.32
M10	10mm x 11mm Marker	5	20	100	$0.14	$0.43
M12	12mm x 11mm Marker	5	20	100	$0.14	$0.43
M15	15mm x 11mm Marker	5	20	100	$0.14	$0.43
M50	20mm x 5mm Marker	1	10	10	$0.18	—

SEE PAGE 462 FOR MARKER ORIENTATION.

III. SERIES MARKER OPTIONS

SERIES MARKER OPTIONS

A. NUMBERS

CODE	DESCRIPTION	NO. OF SETS/ MARKERS PER PACKAGE:†	NO. OF SETS/ MARKERS PER PACKAGE:††
(Blank)	(Blank)	10/100	10/100
NS01-10	1 - 10	10/100	10/100
NS11-20	11 - 20	10/100	10/100
NS21-30	21 - 30	10/100	10/100
NS31-40	31 - 40	10/100	10/100
NS41-50	41 - 50	10/100	10/100
NS51-60	51 - 60	10/100	10/100
NS61-70	61 - 70	10/100	10/100
NS71-80	71 - 80	10/100	10/100
NS81-90	81 - 90	10/100	10/100
NS91-100	91 - 100	10/100	10/100
NS01-20	1 - 20	5/100	5/100
NS21-40	21 - 40	5/100	5/100
NS41-60	41 - 60	5/100	5/100
NS61-80	61 - 80	5/100	5/100
NS81-100	81-100	5/100	5/100
NS01-100	1-100	1/100	1/100

B. SPECIAL SYMBOLS AND CHARACTERS

CODE	DESCRIPTION	NO. OF SETS/ MARKERS PER PACKAGE:†	NO. OF SETS/ MARKERS PER PACKAGE:††
(Blank)	(Blank)	10/100	10/100
SS01	L1, L2, L3 T1, T2, T3	15/90	10/60
SS02	1, 3, 5 2, 4, 6	15/90	10/60
SS03	+ , - , ⏚	30/90	20/60
SS04	+ , - , GND	30/90	20/60

C. LETTERS

CODE	DESCRIPTION	NO. OF SETS/MARKERS PER PACKAGE:†	NO. OF SETS/MARKERS PER PACKAGE:††
(Blank)	(Blank)	10/100	10/100
LSA-J	A - J	10/100	10/100
LSK-T	K - T	10/100	10/100
LSQ-Z	Q - Z	10/100	10/100
LSG-P	G - P	10/100	10/100
LSA-T	A - T	5/100	5/100
LSG-Z	G - Z	5/100	5/100

†WTB2-M2, M5A, M5, M6, M8, M9, M10A, M10 ††WTB2-M12, M15

INDIVIDUAL MARKER OPTIONS

A. NUMBERS

CODE	DESCRIPTION	NO. OF SETS/ MARKERS PER PACKAGE:†	NO. OF SETS/ MARKERS PER PACKAGE:††
(Blank)	(Blank)	10/100	20/100
NI00	0	10/100	20/100
NI01	1	10/100	20/100
NI02	2	10/100	20/100
NI03	3	10/100	20/100
NI04	4	10/100	20/100
NI05	5	10/100	20/100
NI06	6	10/100	20/100
NI07	7	10/100	20/100
NI08	8	10/100	20/100
NI09	9	10/100	20/100
NI10	10	10/100	20/100

B. SPECIAL SYMBOLS AND CHARACTERS

CODE	DESCRIPTION	NO. OF SETS/ MARKERS PER PACKAGE:†	NO. OF SETS/ MARKERS PER PACKAGE:††
(Blank)	(Blank)	10/100	20/100
SI01	L1	10/100	20/100
SI02	L2	10/100	20/100
SI03	L3	10/100	20/100
SI04	T1	10/100	20/100
SI05	T2	10/100	20/100
SI06	T3	10/100	20/100
SI07	+	10/100	20/100
SI08	-	10/100	20/100
SI09	GND	10/100	20/100
SI10	⏚	10/100	20/100
SI11	∿	10/100	20/100
SI12	——	10/100	20/100

C. LETTERS

CODE	DESCRIPTION	NO. OF SETS/ MARKERS PER PACKAGE:†	NO. OF SETS/ MARKERS PER PACKAGE:††
(Blank)	(Blank)	10/100	20/100
LIA	A	10/100	20/100
LIB	B	10/100	20/100
LIC	C	10/100	20/100
LID	D	10/100	20/100
LIE	E	10/100	20/100
LIF	F	10/100	20/100
LIG	G	10/100	20/100
LIH	H	10/100	20/100
LII	I	10/100	20/100
LIJ	J	10/100	20/100
LIK	K	10/100	20/100
LIL	L	10/100	20/100
LIM	M	10/100	20/100
LIN	N	10/100	20/100
LIO	O	10/100	20/100
LIP	P	10/100	20/100
LIQ	Q	10/100	20/100
LIR	R	10/100	20/100
LIS	S	10/100	20/100
LIT	T	10/100	20/100
LIU	U	10/100	20/100
LIV	V	10/100	20/100
LIW	W	10/100	20/100
LIX	X	10/100	20/100
LIY	Y	10/100	20/100
LIZ	Z	10/100	20/100

IV. ORIENTATION OPTIONS

CODE	DESCRIPTION
(Blank)	—
H	Printed w/Horizontal Orientation
V	Printed w/Vertical Orientation

V. LETTER CASE OPTIONS

CODE	DESCRIPTION
(Blank)	—
U	Uppercase (Capital) Letters
L	Lowercase Letters

DISCOUNT SCHEDULE **G**

Marker Orientation

Horizontal

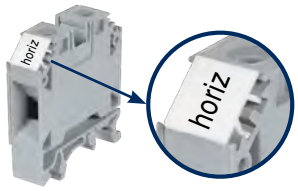

Vertical

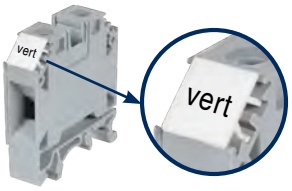

Uppercase

Lowercase

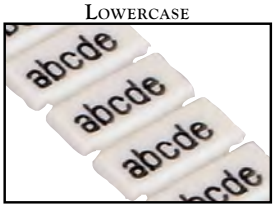

Quick Marker Strips

Standard markings or blank, the WTB2-M quick marker strips are ideally designed to fit blocks of certain widths. An entire strip of markers can be installed at the same time without having to separate the markers, reducing labor and installation time. The Quick Marker Strip Product Guide is below to help match the appropriate marker to each terminal block.

QUICK MARKER STRIP PRODUCT GUIDE

MARKER TYPE	CORRESPONDING TERMINAL BLOCK	
	WTB2-	WTB2S-
WTB2-M2	MW4, W4DD, W4DDB, TL2, TL2S, TL2SL, FB52②, FB525L②, FB52DB②	—
WTB2-M5A	—	MW2
WTB2-M5	W2	W2, W2G, W2-12, W2-22
WTB2-M6	W4, W2/4G, W4-12, W4-22, DB1	W4, W4G, W4-12, W4-22
WTB2-M8	W6, FB52①, FB52L①, FB52DB①	W6, W6G, W6-12, W6-22
WTB2-M9	FB1, FB1L	—
WTB2-M10A	—	MW2-22
WTB2-M10	W10, W6/10G	—
WTB2-M12	W16, W25	—
WTB2-M15	W35, W16/35G	—

① Marker installed on screw terminal. ② Marker installed on fuse carrier/disconnect arm.

Custom Marker Strips

WTB2-M marking strips can be custom printed providing unique markers for any application. These markers are available in different sizes. Both alpha and numeric characters and symbols can be printed on the markers.

CUSTOM MARKER STRIPS

CODE	DESCRIPTION	MARKERS PER/PKG.	LIST EACH MARKER
WTB2-M2-P	Custom White Marker 6mm x 5mm	100	$0.73
WTB2-M5A-P	Custom White Marker 5mm x 5mm	100	$0.73
WTB2-M5-P	Custom White Marker 5mm x 10mm	100	$0.73
WTB2-M6-P	Custom White Marker 6mm x 10mm	100	$0.73
WTB2-M8-P	Custom White Marker 8mm x 11mm	100	$0.73
WTB2-M9-P	Custom White Marker 9mm x 10mm	100	$0.79
WTB2-M10A-P	Custom White Marker 10mm x 5mm	100	$0.73
WTB2-M10-P	Custom White Marker 10mm x 11mm	100	$0.84
WTB2-M12-P	Custom White Marker 12mm x 11mm	100	$0.84
WTB2-M15-P	Custom White Marker 15mm x 11mm	100	$0.84

Custom markers are not available for same day shipping.

DISCOUNT SCHEDULE G

Custom Printing Set-up Fees

Our plotter system and software have almost unlimited capabilities for printing custom terminal block markers. The user-friendly operator views work on a "what you see is what you get" principle. Meaning you can adjust character size and type, rotate characters, and plot symbols from Excel files.

Following is the maximum number of markers in one file:

WTB2-M2, -M5A	1,300 markers
WTB2-M5, -M6, -M8, -M9, -M10	900 markers
WTB2-M10A	600 markers
WTB2-M12, -M15	400 markers

Each custom marker package contains 100 markers (10 markers per strip, 10 strips per package), allowing up to 100 unique markings. See the image below for an example.

WTB2-M2 Marker

1	2	3	4	5	6	7	8	9	0
a	b	c	d	e	f	g	h	i	j
11	22	33	44	55	66	77	88	99	0
1!	2@	3#	4	5%	6^	7&	8*	9(	0)

You can download the Marker Template file from our website, fill out the Questionnaire section along with your desired markings, and send it back to us. The naming convention for the Marker template file will be the PO number. For example: "33601-1.xls" (where 33601 represents your purchase order number, and -1, -2, -3 represents the number of files submitted).

33601-1.xls
33601-2.xls
33601-3.xls

Note: It is necessary to submit the Marker Template file with all its tabs (Questionnaire tab and respective Markings tab).

If you submit the Marker Template file with us, NO FEE will be charged. However, if you choose not to submit the file and request c3controls to generate the markings on your behalf, then there is a $50 fee.

If you have questions regarding custom printing, contact our customer first team at 724.775.7926.

WTB2 SERIES / Slotted Screwdriver Blade Dimensions

The following table may be used as a guideline for selecting the appropriate slotted screwdriver blade dimension for use with c3controls' WTB2 series terminal blocks.

GUIDE FOR SELECTING APPROPRIATE SLOTTED SCREWDRIVER BLADE DIMENSION (MM)

TYPE	CAT NO.	2.5	3.0	3.5	4.0	4.5	5.0	5.5	6.5
SCREW CLAMP	WTB2-BRKT1③								
	WTB2-DB1			x					
	WTB2-EB					x			
	WTB2-EB2					x			
	WTB2-EB3								x
	WTB2-FB1			x					
	WTB2-FB130					x			
	WTB2-FB1L			x					
	WTB2-FB52			x					
	WTB2-FB52DB			x					
	WTB2-FB52L			x					
	WTB2-MW4			x					
	WTB2-PDB80			x		x			
	WTB2-TL2	x							
	WTB2-TL2S	x							
	WTB2-TL2SLN	x							
	WTB2-TL2SLP	x							
	WTB2-W10					x			
	WTB2-W10/xCB①		x						
	WTB2-W16					x			
	WTB2-W16/35G								x
	WTB2-W16/xCB①		x						
	WTB2-W2		x						
	WTB2-W2/4G			x					
	WTB2-W2/xCB①		x						
	WTB2-W25						x		
	WTB2-W25/xCB①					x			
	WTB2-W35							x	
	WTB2-W35/xCB①					x			
	WTB2-W4			x					
	WTB2-W4-12		x						
	WTB2-W4-22		x						
	WTB2-W4/xCB①		x						
	WTB2-W4D/xCB①		x						
	WTB2-W4DD			x					
	WTB2-W4DDB			x					
	WTB2-W6					x			
	WTB2-W6/10G					x			
	WTB2-W6/xCB①		x						
	WTB2-W70								x
	WTB2-W95②								
SPRING CLAMP	WTB2S-MW2		x						
	WTB2S-MW2-22		x						
	WTB2S-W2		x						
	WTB2S-W2-12		x						
	WTB2S-W2-22		x						
	WTB2S-W2G		x						
	WTB2S-W4			x					
	WTB2S-W4-12			x					
	WTB2S-W4-22			x					
	WTB2S-W4G			x					
	WTB2S-W6					x			
	WTB2S-W6-12					x			
	WTB2S-W6-22					x			
	WTB2S-W6G					x			

①x= 2, 3, 4 or 10 ②Phillips nr.2 ③Allen 6mm

SCREW CLAMP FEED THROUGH

WTB2-W2 (25A)

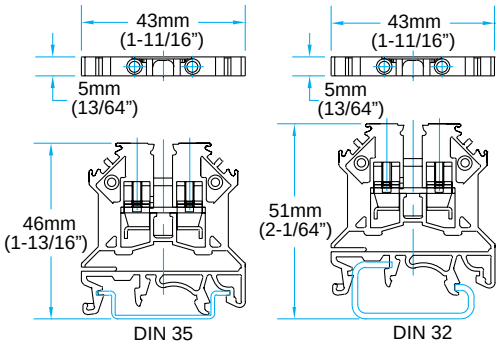

WTB2-W4 (35A)

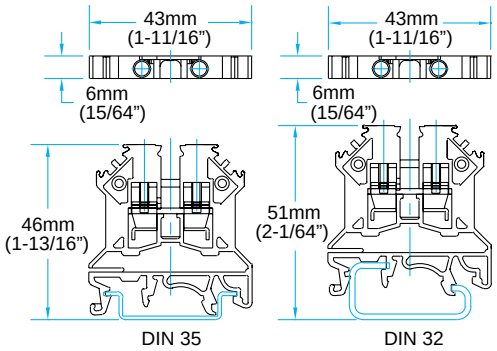

WTB2-W6 (50A)

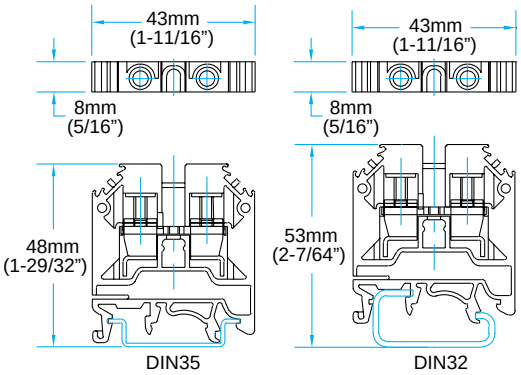

WTB2-W10 (65A)

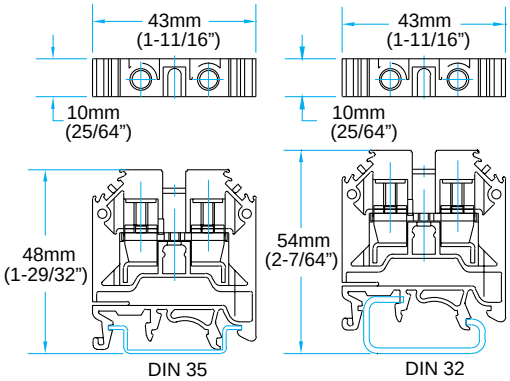

WTB2-W16 (85A)

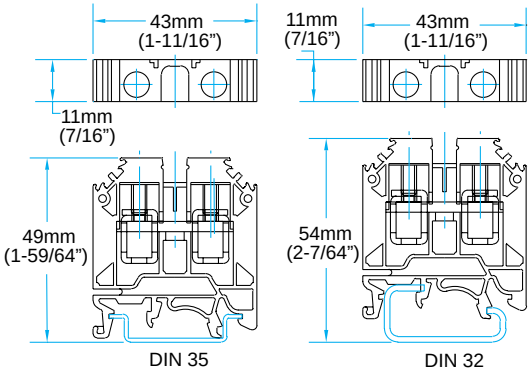

WTB2-W25 (115A)

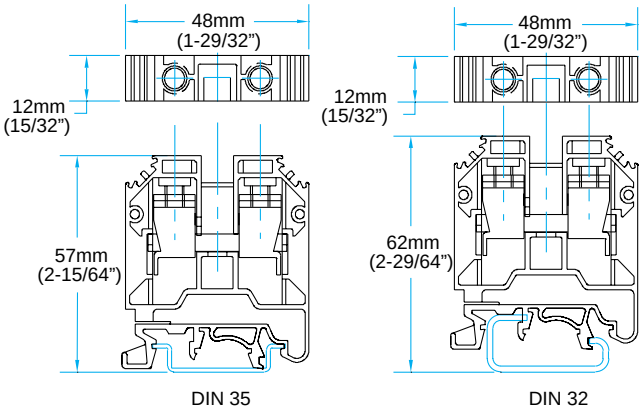

SCREW CLAMP FEED THROUGH (CONT.)

WTB2-W35 (145A)

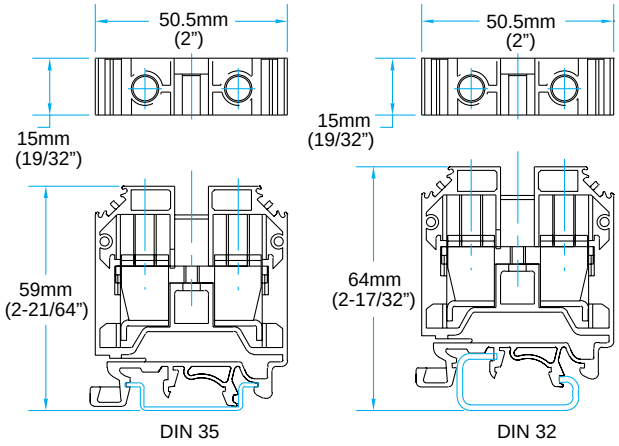

WTB2-W70 (150A)

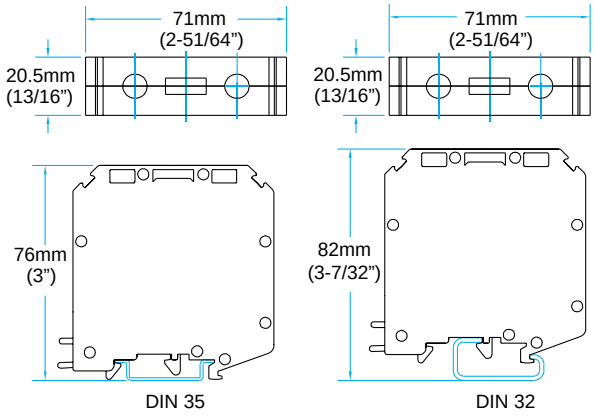

WTB2-W95 (230A)

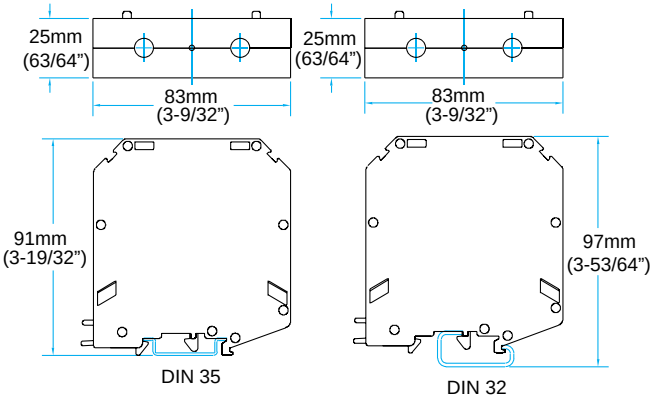

SCREW CLAMP GROUND

WTB2-W2/4G

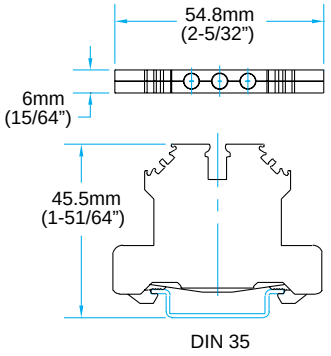

WTB2-W6/10G

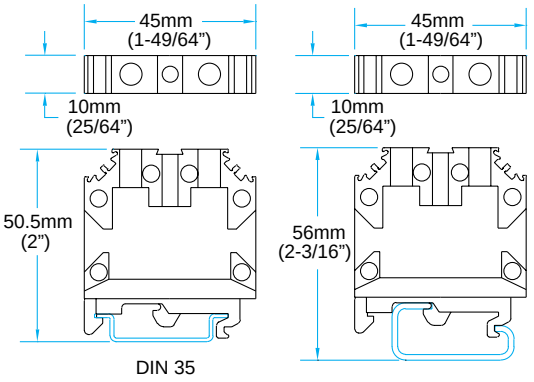

WTB2-W16/35G

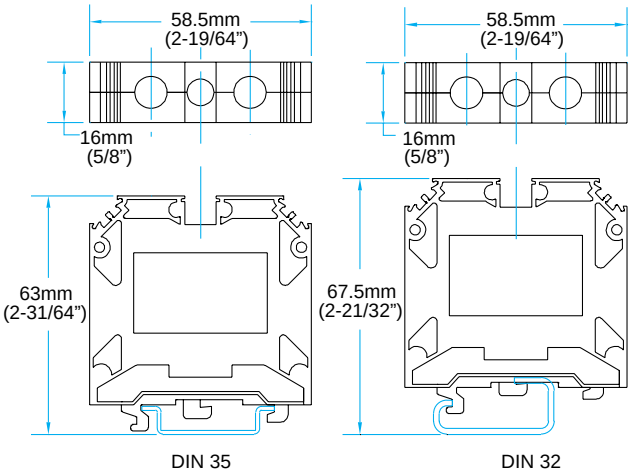

SCREW CLAMP MULTI-CONDUCTOR FEED THROUGH

WTB2-W4-12 (32A)

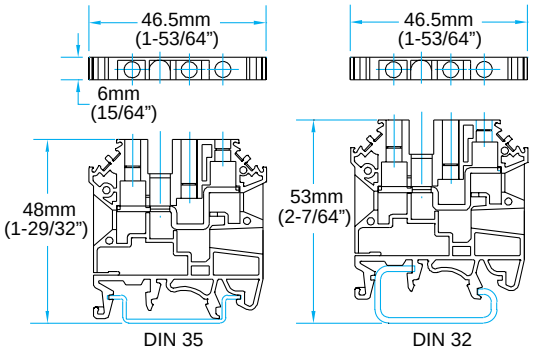

WTB2-W4-22 (35A)

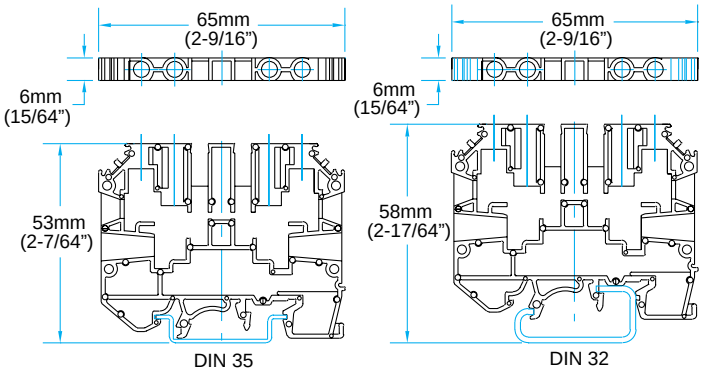

SCREW CLAMP DOUBLE LEVEL FEED THROUGH

WTB2-W4DD, WTB2-W4DDB (35A)

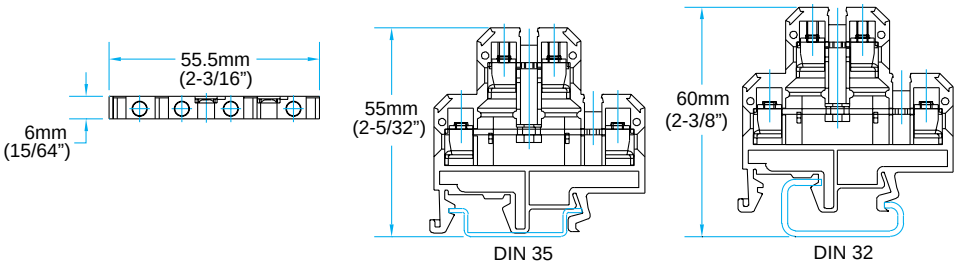

SCREW CLAMP TRIPLE LEVEL

WTB2-TL2 (25A)

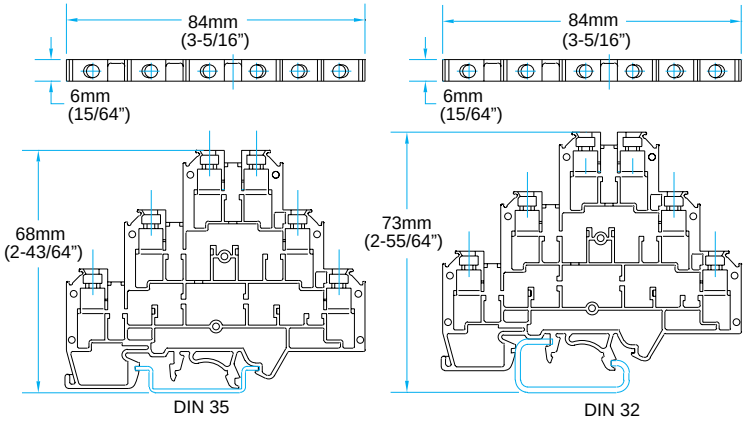

WTB2-TL2S (25A), WTB2-TL2SLP (25A), WTB2-TL2SLN (25A)

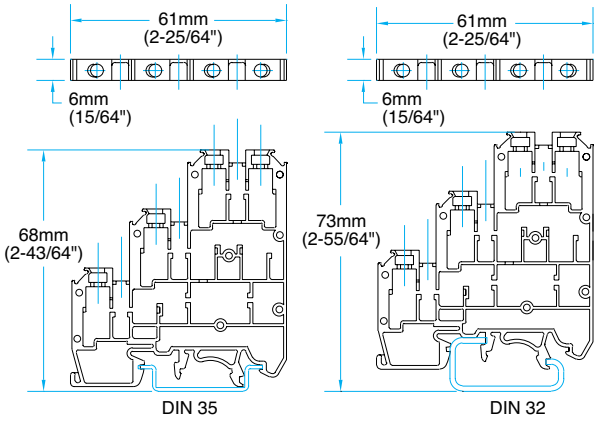

SCREW CLAMP FUSE HOLDER

WTB2-FB1 (6.3A), WTB2-FB1L (6.3A)

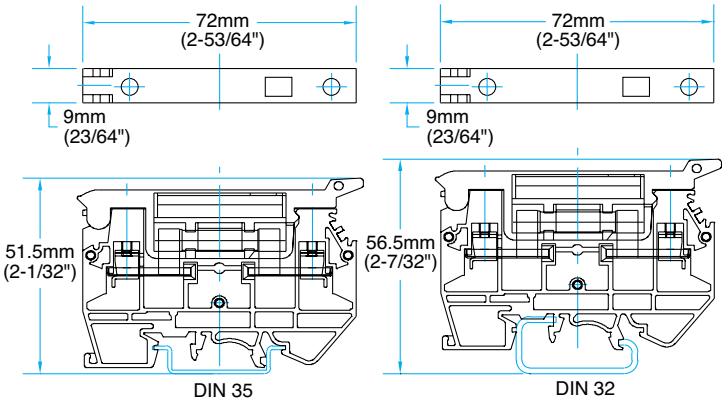

WTB2-FB52 (6.3A), WTB2-FB52L (6.3A)

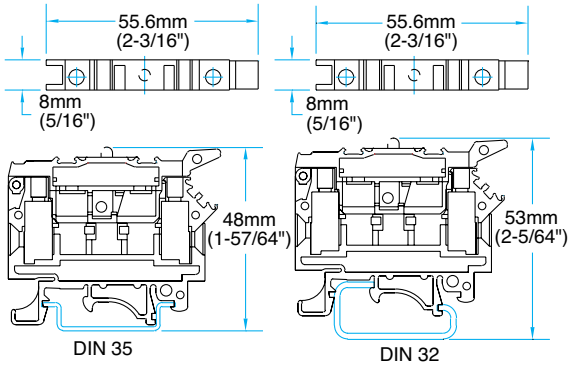

WTB2-FB130 (30A)

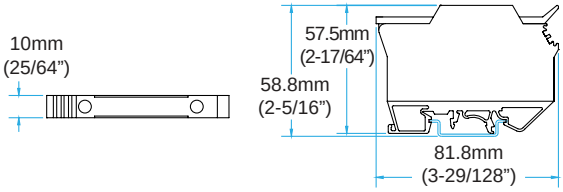

SCREW CLAMP DISCONNECT

WTB2-FB52DB (6.3A)

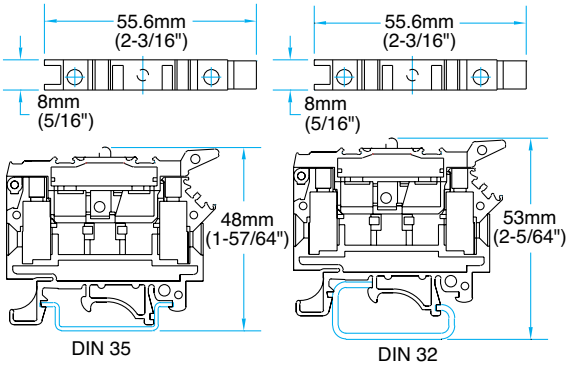

WTB2-DB1 (35A)

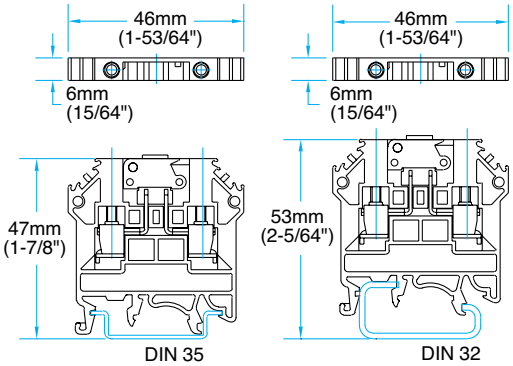

SCREW CLAMP POWER DISTRIBUTION

WTB2-PDB80 (80A)

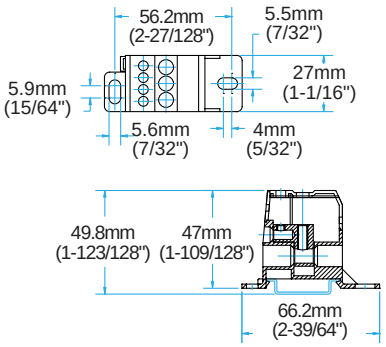

SCREW CLAMP MINIATURE FEED THROUGH

WTB2-MW4 (35A)

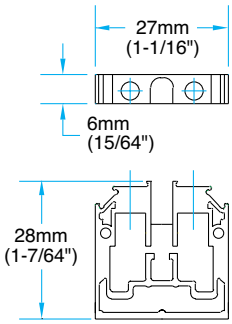

SCREW CLAMP END PLATES

WTB2-EPW2/4

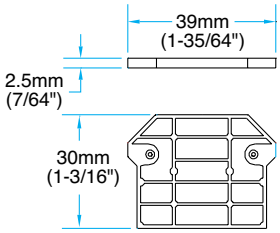

WTB2-EPW6/10

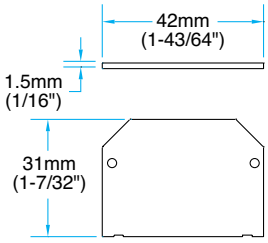

WTB2-EPW25

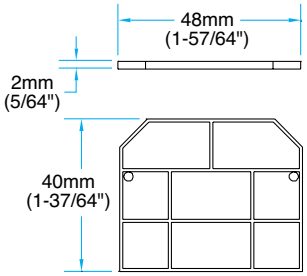

WTB2-EPW35

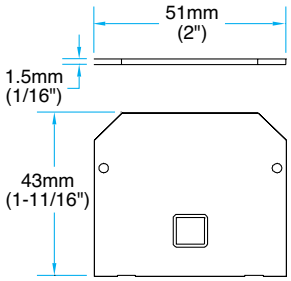

WTB2-EPW4-12

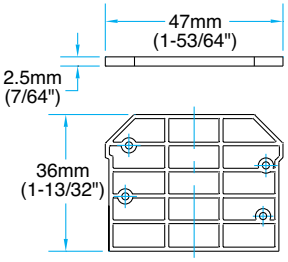

WTB2-EPW4-22

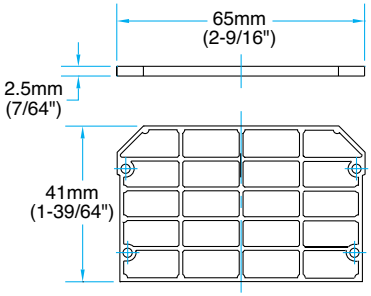

WTB2-EPW4DD

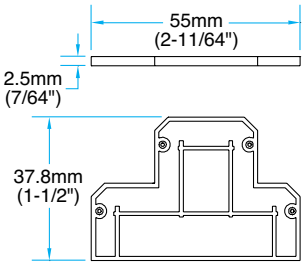

WTB2-EPTL2

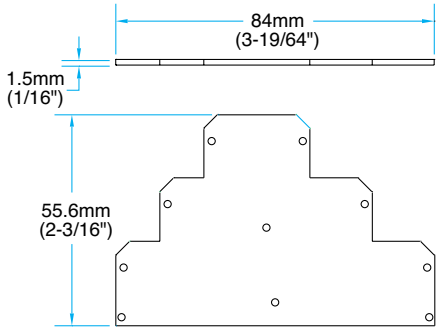

WTB2-EPTL2S

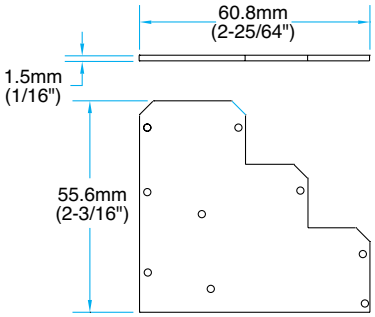

WTB2-EPFB1

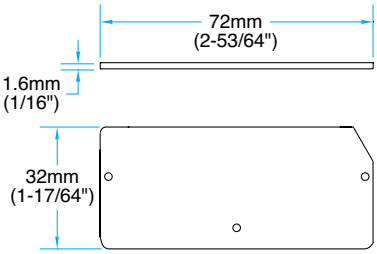

WTB2-EPFB52

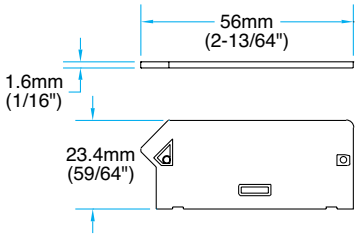

WTB2-EPDB1

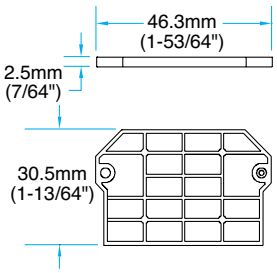

WTB2-EPMW4

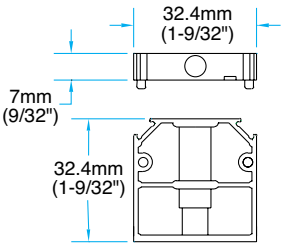

SCREW CLAMP PARTITION PLATES

WTB2-PPW2/4

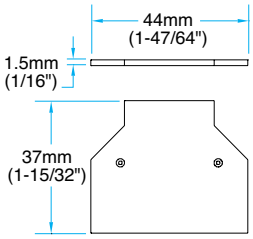

WTB2-PPW6/10

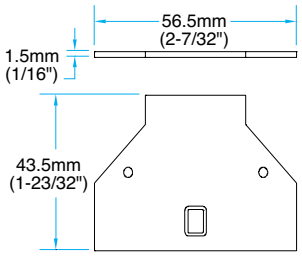

WTB2-PPW25

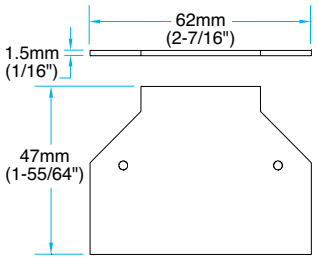

WTB2-PPW35

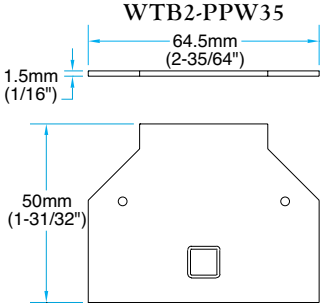

WTB2-PPFB52

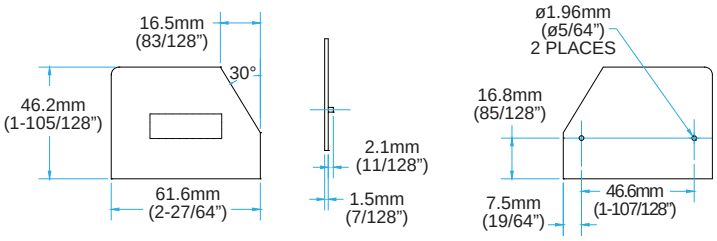

END BARRIERS FOR SCREW CLAMP & SPRING CLAMP TERMINAL BLOCKS

WTB2-EB

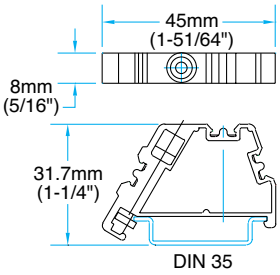

WTB2-EB3

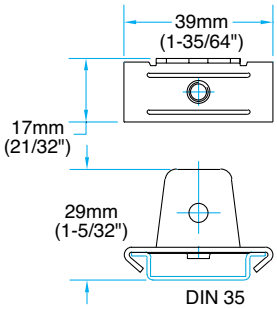

WTB2-EB2

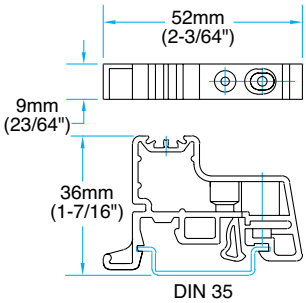

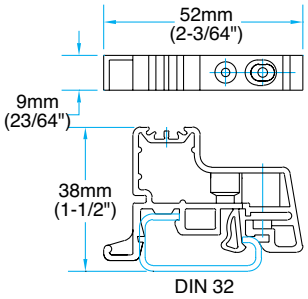

DIN RAIL SUPPORT BRACKET FOR SCREW CLAMP & SPRING CLAMP TERMINAL BLOCKS

WTB2-BRKT1

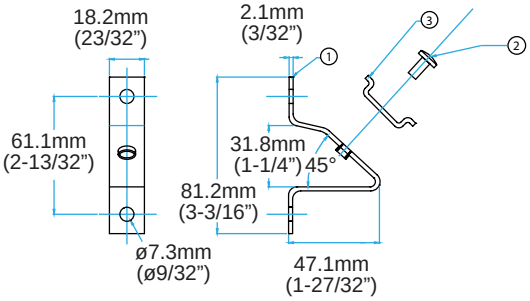

Recommended Mounting - (2) Size M6 [1/4] Machine Screw Max.

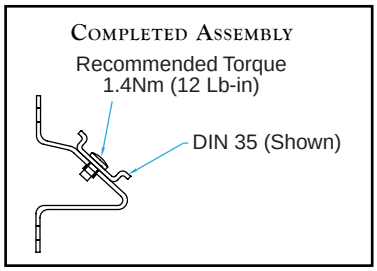

SPRING CLAMP FEED THROUGH

WTB2S-W2 (20A)

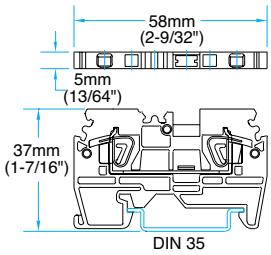

WTB2S-W4 (25A)

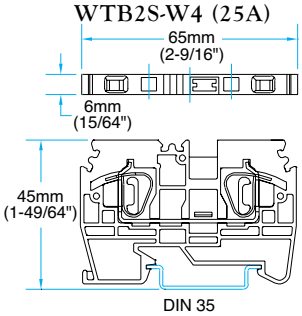

WTB2S-W6 (50A)

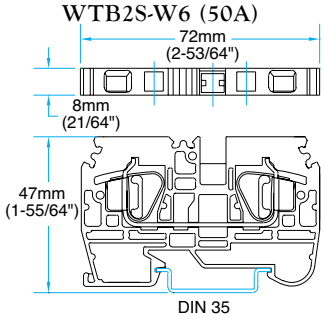

SPRING CLAMP GROUND

WTB2S-W2G

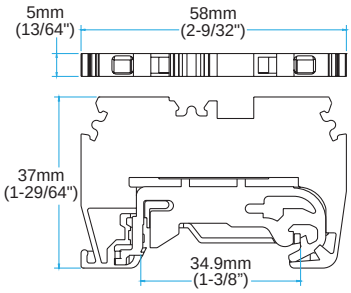

WTB2S-W4G

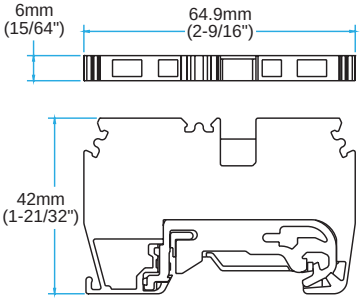

WTB2S-W6G

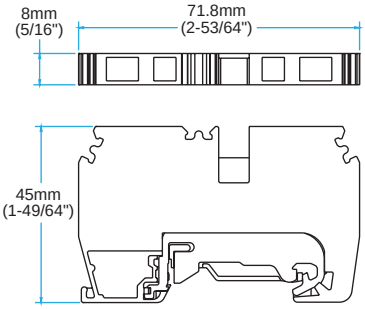

SPRING CLAMP MULTI-CONDUCTOR FEED THROUGH

WTB2S-W2-12 (20A)

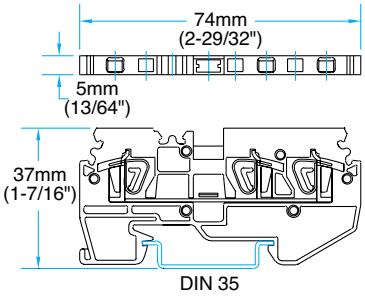

WTB2S-W2-22 (20A)

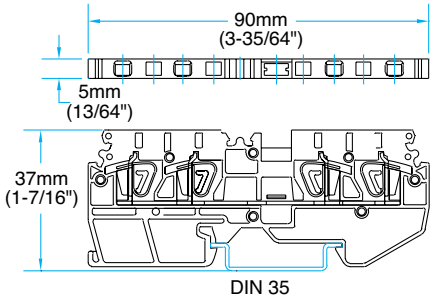

WTB2S-W4-12 (25A)

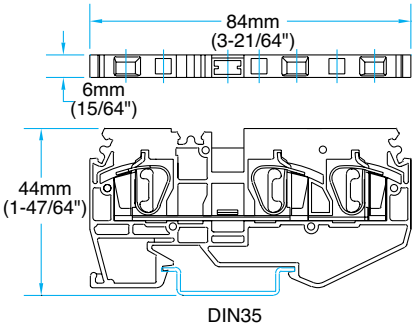

WTB2S-W4-22 (25A)

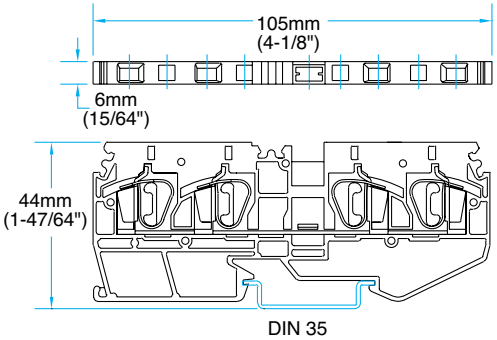

WTB2S-W6-12 (50A)

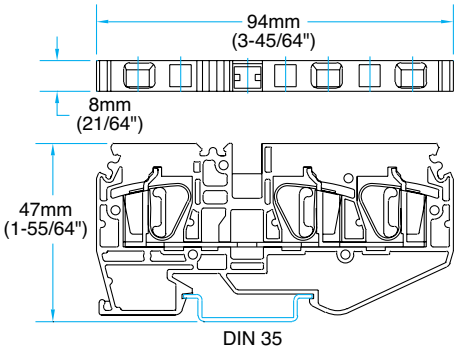

WTB2S-W6-22 (50A)

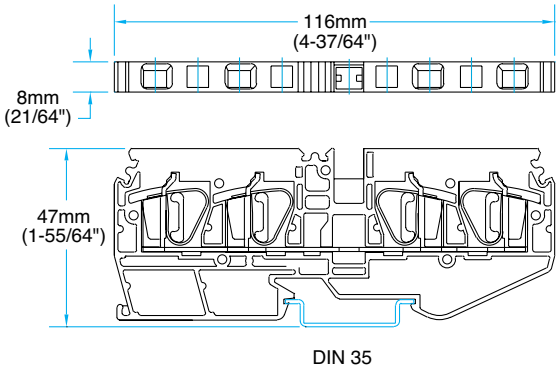

SPRING CLAMP MINIATURE FEED THROUGH PANEL MOUNT

WTB2S-MW2 (20A)

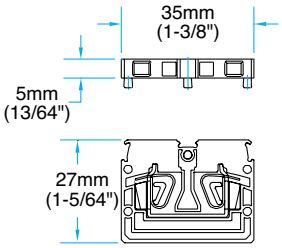

WTB2S-MW2-22 (20A)

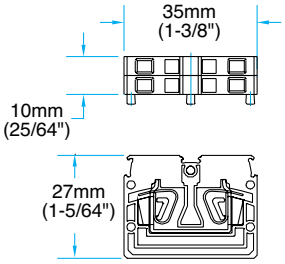

SPRING CLAMP END PLATES

WTB2S-EPW2

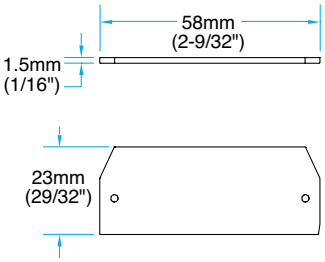

WTB2S-EPW2-12

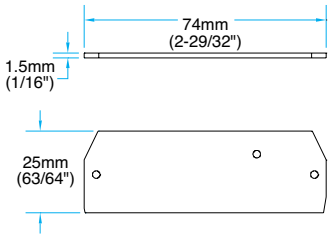

WTB2S-EPW2-22

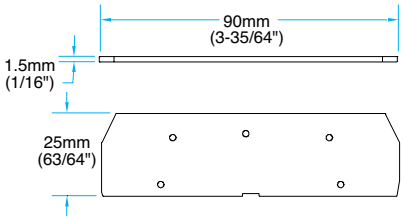

WTB2S-EPW4

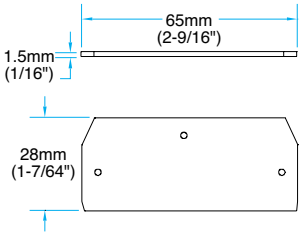

WTB2S-EPW4-12

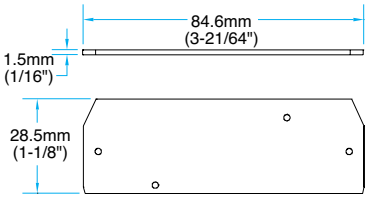

WTB2S-EPW4-22

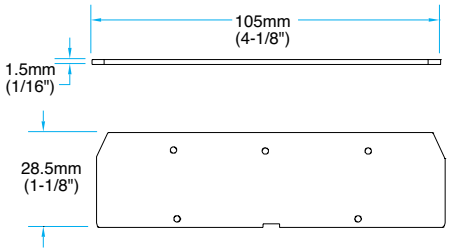

WTB2S-EPW6

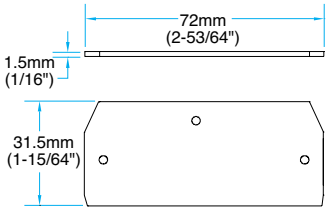

WTB2S-EPW6-12

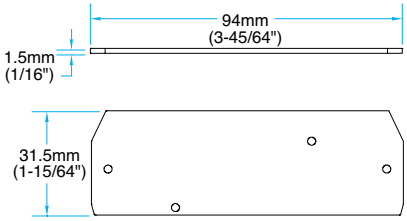

WTB2S-EPW6-22

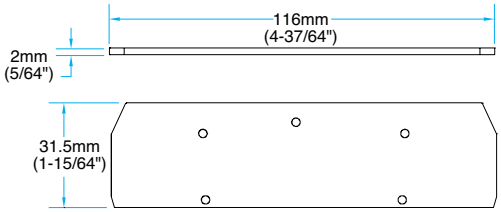

WTB2S-EPMW2

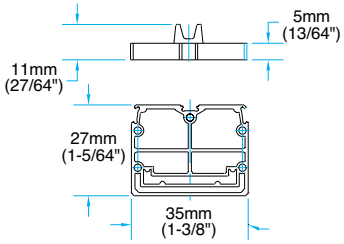

SPRING CLAMP PARTITION PLATES

WTB2S-PPW2

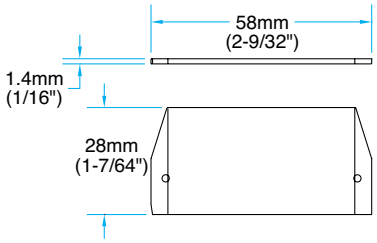

WTB2S-PPW2-12

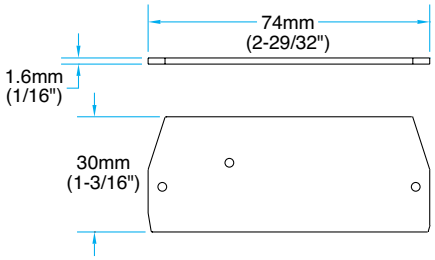

WTB2S-PPW2-22

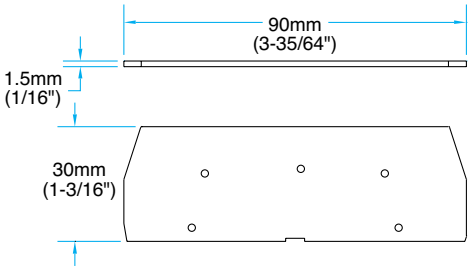

WTB2S-PPW4

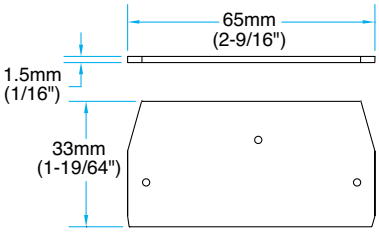

WTB2S-PPW4-12

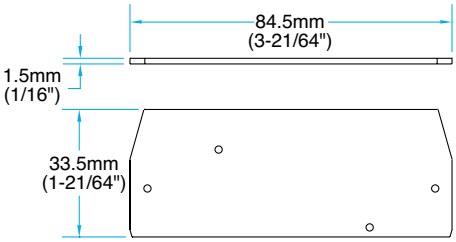

WTB2S-PPW4-22

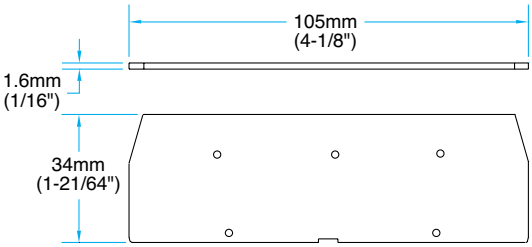

WTB2S-PPW6

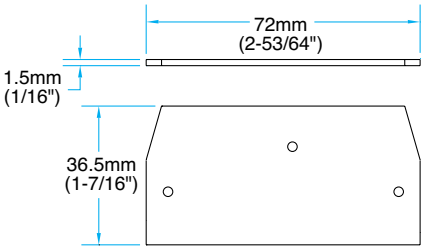

WTB2S-PPW6-12

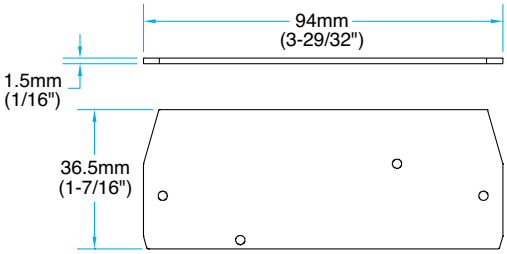

WTB2S-PPW6-22

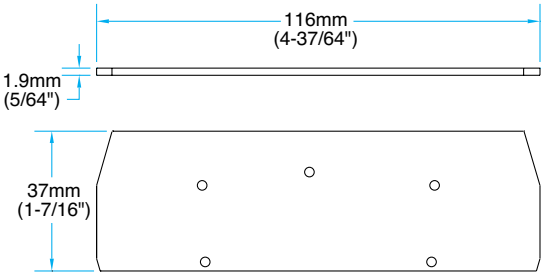

HIGH DENSITY TERMINAL BLOCKS

series TB high density

c3controls' line of High Density terminal blocks are both innovative and user-friendly. Available in multiple terminal points from 4, 6, and 12 in a single molded housing, are simple to install, and they carry an electrical rating of 30A @ 600V AC (UL/CSA) and 30A @ 750V AC (IEC). These double-row barrier terminal blocks are engineered as replacements for the GE CR151, GE EB25/EB27, and Marathon 1500/1700 Series.

Section 23

High Density Terminal Blocks 4
High Density Shorting Terminal Blocks 6
Markers & Accessories 9
Dimensions 12

PROVEN

Conformity to Standards:

High Density Terminal Blocks
UL 1059
CSA C22.2 No. 65, 188
IEC 60947-1, 60947-7

High Density Shorting Terminal Blocks
UL 1059
CSA C22.2 No. 65, 188
IEC 60947-1, 60947-7

Certifications:

UL File #: E145984 (Guide XCFR2, XCFR8)

CE Marked (per EU Low Voltage Directive 2006/95/EC and RoHS Directive 2011/65/EU)

UL File #: E145984

CE Marked (per EU Low Voltage Directive 2006/95/EC and RoHS Directive 2011/65/EU)

Visit c3controls.com to download product certifications.

NOTE: The scope (range, description, price, specifications, dimensions, etc.) of the product featured in this section is subject to change without notice. Refer to c3controls.com for product updates.

HIGH DENSITY TERMINAL BLOCKS

Every c3controls product is designed and manufactured to meet the needs of the machine builder, including our line of High Density Terminal Blocks. Check out all the features of our Series TB High Density Terminal Blocks below!

ENGINEERED TO HANDLE YOUR MOST COMPLEX WIRING APPLICATIONS

✓ **Proven**	Our high density terminal blocks and shorting blocks meet UL and CSA standards, and are RoHS compliant.
✓ **Multiple Wire Sizes**	High density terminal blocks accommodate #18 to #10 AWG wires (0.34 – 4mm^2).
✓ **Wide Range of Operation**	A wide range of 4, 6, and 12 point circuit terminal blocks in a single molded housing rated for 600V, 30A continuous service.
✓ **Shorting Block**	Our HDTB-SB high-density CT shorting block is now available in 2, 4, and 6-point circuit configurations, and is designed to provide ease of connecting systems to applications such as current transformers, switchgear, and tap points.
✓ **Convenient**	c3controls' high density terminal blocks are directly interchangeable with GE CR151 terminal blocks and our shorting blocks are directly interchangeable with GE EB27B06S terminal blocks.
✓ **Wiring Made Easy**	Wiring to the terminal blocks is made easy by unobstructed access to terminals.
✓ **Heavy-Duty Construction**	We mold our terminal block housings from unbreakable thermoplastic and we use quality zinc plated brass and electrolytic copper for our metal parts for excellent conductivity and to minimize corrosion.
✓ **Quick Identification**	Terminal markers are available and can be hand marked or custom printed.
✓ **Easy to Install**	Available panel mounting or 35mm DIN rail mounting for easy assembly.
✓ **Time Savings**	Individual blocks can be quickly and easily added or removed without disturbing adjacent blocks. Only a screwdriver is required for removal.
✓ **36-Month Warranty***	Every product is backed by our 36-Month Warranty—giving you confidence in the quality, reliability, and performance of components designed for the most demanding applications.
✓ **Guaranteed Same-Day Shipping***	Product availability reduces inventory, and improves cash-flow—saving you money. With c3controls any order for standard catalog items received by 6:00pm ET is guaranteed to ship same-day.
✓ **Advantage Pricing**	Our approach to product development, manufacturing, and focus on servicing the OEM and Electrical Equipment Builder reduces cost. The result—the best value in the industry.

*See c3controls Terms & Conditions

> *"c3controls' products uphold our commitment to provide quality solutions to our customers while keeping our costs under control."*

Len Frid, Electrical Engineer • **Advanced Poly-Packaging, Inc.**

HDTB-4

HDTB-6

HDTB-12

HDTB-SB-2

HDTB-SB-4

HDTB-SB-6

UNIQUE PRODUCT LINE FEATURES

HIGH DENSITY

Multiple terminal points, 4, 6, or 12 in a single molded housing providing high density of terminal connections in a compact size.

FLEXIBILITY

#8-32 terminal screws and integrated 35mm DIN Rail snap and panel mounting geometry allow for the terminal block to be used in a wide variety of applications.

READY TO INSTALL

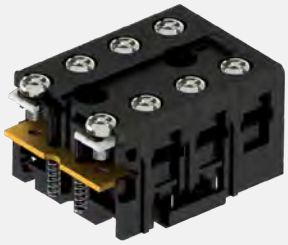

Out of the box and ready to install! Screws come in the backed out position with convenient spring-return open terminals for easy wiring, even allows for up to two (2) ring lugs.

QUICK IDENTIFICATION

Large marking strip available that can be hand marked or custom printed to provide quick and accurate identification of the terminals.

SHORTING TERMINAL BLOCK

Brass shorting strips with Thumb screws for easy terminal shorting. Terminals can be shorted according to customer requirements.

TRANSPARENT COVER

Our High-Density Shorting Terminal Block is available with a factory-installed transparent protective cover. Made from durable UL-recognized thermoplastic, this cover increases safety while maintaining visibility. The cover can also be ordered separately as a standalone accessory.

FIND IT FAST

High Density Terminal Blocks

- Certifications
- Specifications
- Dimension Drawings
- Installation Instructions
- Easy To Buy

c3controls.com

HIGH DENSITY TERMINAL BLOCKS

NOTE: When installing with DIN Rail, deep DIN Rail is recommended.

DISCOUNT SCHEDULE G

	HDTB-4			HDTB-6			HDTB-12		
SPECIFICATIONS	**4 CIRCUIT**			**6 CIRCUIT**			**12 CIRCUIT**		
Certifications	c.RU us UL 1059 File #: E145984			c.RU us UL 1059 File #: E145984			c.RU us UL 1059 File #: E145984		
Voltage Rating (V)	600V			600V			600V		
Maximum Current (A)	30A			30A			30A		
Wire Range	#18 - #10 AWG			#18 - #10 AWG			#18 - #10 AWG		
Wire Strip Length	5/16"			5/16"			5/16"		
Tightening Torque	7-12 lb-in. (max. 18-20 lb-in.)			7-12 lb-in. (max. 18-20 lb-in.)			7-12 lb-in. (max. 18-20 lb-in.)		
Base Style - Mounting	Panel mount/ DIN rail mount			Panel mount/ DIN rail mount			Panel mount/ DIN rail mount		
ROHS COMPLIANCE	For RoHS compliance documentation by product, refer to c3controls.com								
TERMINAL BLOCKS	**CAT. NO.**	**PCS./PKG.**	**LIST/PC.**	**CAT. NO.**	**PCS./PKG.**	**LIST/PC.**	**CAT. NO.**	**PCS./PKG.**	**LIST/PC.**
Black	HDTB-4	1	$14.00	HDTB-6	1	$20.00	HDTB-12	1	$38.00
ACCESSORIES (see page 9)	**CAT. NO.**	**PCS./PKG.**	**LIST/PC.**	**CAT. NO.**	**PCS./PKG.**	**LIST/PC.**	**CAT. NO.**	**PCS./PKG.**	**LIST/PC.**
2-Point Jumper	HDTB-J2	50	$ 1.15	HDTB-J2	50	$ 1.15	HDTB-J2	50	$ 1.15
Marking Strips (Blank)*	MK-HDTB-4	10	$ 0.85	MK-HDTB-6	10	$ 1.00	MK-HDTB-12	0	$ 1.00
Plated Steel Mounting Rail, DIN									
35mm x 7.5mm - Slotted - 1 Meter	DRMR3	1	$ 9.70	DRMR3	1	$ 9.70	DRMR3	1	$ 9.70
35mm x 7.5mm - Slotted - 2 Meters	DRMR6	10	$19.20	DRMR6	10	$19.20	DRMR6	10	$19.20
35mm x 15mm - Slotted - 1 Meter	DRMR3D	1	$14.40	DRMR3D	1	$14.40	DRMR3D	1	$14.40
35mm x 15mm - Slotted - 2 Meters	DRMR6D	10	$27.60	DRMR6D	10	$27.60	DRMR6D	10	$27.60
Aluminum Mounting Rail, DIN									
35mm x 7.5mm - Slotted - 1 Meter	DRMR3A	1	$16.80	DRMR3A	1	$16.80	DRMR3A	1	$16.80

*NOTE: See pages 9 and 10 for Standard and Custom Printed Markers.
Marking Strips MK-HDTB-12: 20 markers per package, 2 markers are used per terminal block.

High Density Terminal Blocks

c3controls' line of High Density Terminal Blocks are rated 600 volts, 30 amperes continuous service and will accommodate #18 to #10 AWG (0.34 - 4mm^2) stranded or solid copper wire, single or parallel conductors of same size and type (stranded/stranded or solid/solid only) per terminal and include captive wire clamps for use with wire or ring type connectors, as standard. Available panel mounting or DIN rail mounting (35mm x 7.5mm or 35mm x 15mm), any combination of High Density Terminal Blocks may be assembled next to one another on the same mounting rail. Individual blocks can quickly and easily be inserted or removed without disturbing adjacent blocks. Only a screwdriver is required for removal.

SPECIAL FEATURES

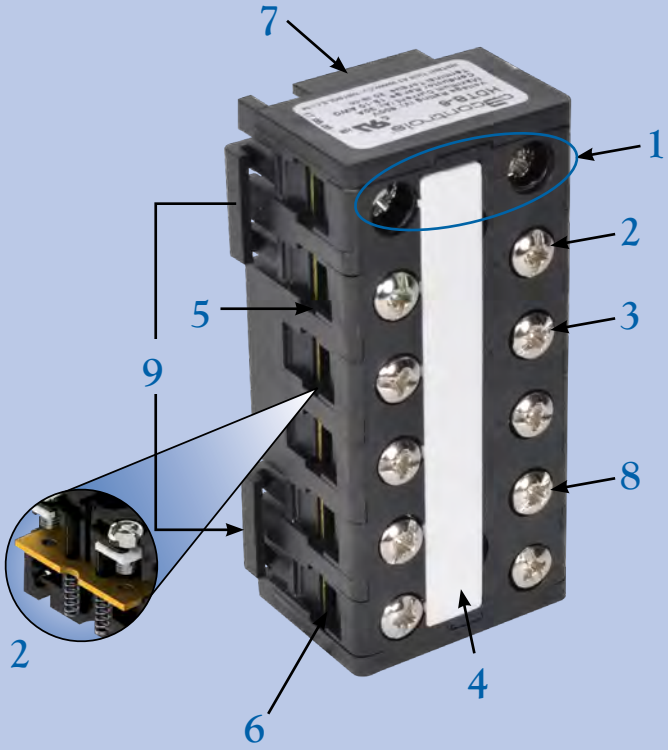

1. Construction provides IP20 protection to guard against accidental contact with live parts.
2. Out of the box and ready to install! Integral captive terminal screws and clamps come in the backed-out position with convenient spring-return open terminals for easy wiring.
3. Combination head terminal screws allow the use of straight, phillips, or posidrive screwdrivers, making it easy to apply the proper terminal tightening torque for a more secure, quick, and easy installation.
4. Marking system allows for fast and easy circuit identification. Blank and custom markers are available.
5. Wiring to the terminal blocks is made easy by unobstructed access to terminals. Accommodates #18 to #10 AWG (0.34 - 4mm^2) stranded or solid copper wire, single or parallel conductors of same size and type.
6. Accepts ring type connectors, including installation of two (2) ring conductors, up to 12-10AWG ring lug.
7. Housing is molded out of an unbreakable, high quality thermoplastic.
8. Zinc plated screws and electrolytic brass for excellent conductivity and to minimize corrosion.
9. Panel mounting or DIN rail mounting (35mm x 7.5mm or 35mm x 15mm), any combination of High Density Terminal Blocks may be assembled next to one another on the same mounting rail.

SHORTING TERMINAL BLOCKS

NEW

DISCOUNT SCHEDULE G

NOTE: When installing with DIN Rail, deep DIN Rail is recommended.

	HDTB-SB-2			HDTB-SB-4			HDTB-SB-6		
SPECIFICATIONS	**2 CIRCUIT**			**4 CIRCUIT**			**6 CIRCUIT**		
Certifications	c UL us UL 1059 File #: E145984			c UL us UL 1059 File #: E145984			c UL us UL 1059 File #: E145984		
Voltage Rating (V)	600V			600V			600V		
Maximum Current (A)	60A (prepared wire) 30A (unprepared wire)			60A (prepared wire) 30A (unprepared wire)			60A (prepared wire) 30A (unprepared wire)		
Wire Range	#18 to #10 AWG (unprepared wire) #18 to #6 AWG (prepared wire)			#18 to #10 AWG (unprepared wire) #18 to #6 AWG (prepared wire)			#18 to #10 AWG (unprepared wire) #18 to # 6 AWG (prepared wire)		
Wire Strip Length	5/16"			5/16"			5/16"		
Tightening Torque	23 lb-in. [2.6 Nm]			23 lb-in. [2.6 Nm]			23 lb-in. [2.6 Nm]		
Shorting Screw Type	Thumb screw			Thumb screw			Thumb screw		
Base Style - Mounting	Panel mount/ DIN rail mount			Panel mount/ DIN rail mount			Panel mount/ DIN rail mount		
ROHS COMPLIANCE	For RoHS compliance documentation by product, refer to c3controls.com								
SHORTING BLOCKS	**CAT. NO.**	**PCS./PKG.**	**LIST/PC.**	**CAT. NO.**	**PCS./PKG.**	**LIST/PC.**	**CAT. NO.**	**PCS./PKG.**	**LIST/PC.**
Black	HDTB-SB-2	1	$20.00	HDTB-SB-4	1	$27.00	HDTB-SB-6	1	$40.00
ACCESSORIES (see page 9)	**CAT. NO.**	**PCS./PKG.**	**LIST/PC.**	**CAT. NO.**	**PCS./PKG.**	**LIST/PC.**	**CAT. NO.**	**PCS./PKG.**	**LIST/PC.**
Plated Steel Mounting Rail, DIN									
35mm x 7.5mm - Slotted - 1 Meter	DRMR3	1	$ 9.70	DRMR3	1	$ 9.70	DRMR3	1	$ 9.70
35mm x 7.5mm - Slotted - 2 Meters	DRMR6	10	$19.20	DRMR6	10	$19.20	DRMR6	10	$19.20
35mm x 15mm - Slotted - 1 Meter	DRMR3D	1	$14.40	DRMR3D	1	$14.40	DRMR3D	1	$14.40
35mm x 15mm - Slotted - 2 Meters	DRMR6D	10	$27.60	DRMR6D	10	$27.60	DRMR6D	10	$27.60
Aluminum Mounting Rail, DIN									
35mm x 7.5mm - Slotted - 1 Meter	DRMR3A	1	$16.80	DRMR3A	1	$16.80	DRMR3A	1	$16.80

NOTE: Shorting screws for HDTB Shorting blocks are available through our replacement hardware offering. For information on lead times and minimum order quantities, please contact our Customer First Team.

SHORTING TERMINAL BLOCKS W/ COVER

NEW

DISCOUNT SCHEDULE G

NOTE: When installing with DIN Rail, deep DIN Rail is recommended.

COMING SOON

COMING SOON

	HDTB-SB-2-C			HDTB-SB-4-C			HDTB-SB-6-C		
SPECIFICATIONS	**2 CIRCUIT**			**4 CIRCUIT**			**6 CIRCUIT**		
Certifications	c UL us UL 1059 File #: E145984			c UL us UL 1059 File #: E145984			c UL us UL 1059 File #: E145984		
Voltage Rating (V)	600V			600V			600V		
Maximum Current (A)	60A (prepared wire) 30A (unprepared wire)			60A (prepared wire) 30A (unprepared wire)			60A (prepared wire) 30A (unprepared wire)		
Wire Range	#18 to #10 AWG (unprepared wire) #18 to #6 AWG (prepared wire)			#18 to #10 AWG (unprepared wire) #18 to #6 AWG (prepared wire)			#18 to #10 AWG (unprepared wire) #18 to #6 AWG (prepared wire)		
Wire Strip Length	5/16"			5/16"			5/16"		
Tightening Torque	23 lb-in. [2.6 Nm]			23 lb-in. [2.6 Nm]			23 lb-in. [2.6 Nm]		
Shorting Screw Type	Phillips screw			Phillips screw			Phillips screw		
Transparent Cover	Included			Included			Included		
Base Style - Mounting	Panel mount/ DIN rail mount			Panel mount/ DIN rail mount			Panel mount/ DIN rail mount		
ROHS COMPLIANCE	For RoHS compliance documentation by product, refer to c3controls.com								
SHORTING BLOCKS	**CAT. NO.**	**PCS./PKG.**	**LIST/PC.**	**CAT. NO.**	**PCS./PKG.**	**LIST/PC.**	**CAT. NO.**	**PCS./PKG.**	**LIST/PC.**
Black	HDTB-SB-2-C	1	$ 25.50	HDTB-SB-4-C	1	$ 34.50	HDTB-SB-6-C	1	$ 50.00
ACCESSORIES (see page 9)	**CAT. NO.**	**STD. PKG.**	**LIST/PC.**	**CAT. NO.**	**STD. PKG.**	**LIST/PC.**	**CAT. NO.**	**STD. PKG.**	**LIST/PC.**
Marking Strips (Blank)*	MK-HDTB-SB-2-C	10	$ 0.65	MK-HDTB-SB-4-C	10	$ 1.30	MK-HDTB-SB-6-C	10	$ 1.70
Plated Steel Mounting Rail, DIN									
35mm x 7.5mm - Slotted - 1 Meter	DRMR3	1	$ 9.70	DRMR3	1	$ 9.70	DRMR3	1	$ 9.70
35mm x 7.5mm - Slotted - 2 Meters	DRMR6	10	$19.20	DRMR6	10	$19.20	DRMR6	10	$19.20
35mm x 15mm - Slotted - 1 Meter	DRMR3D	1	$14.40	DRMR3D	1	$14.40	DRMR3D	1	$14.40
35mm x 15mm - Slotted - 2 Meters	DRMR6D	10	$27.60	DRMR6D	10	$27.60	DRMR6D	10	$27.60
Aluminum Mounting Rail, DIN									
35mm x 7.5mm - Slotted - 1 Meter	DRMR3A	1	$16.80	DRMR3A	1	$16.80	DRMR3A	1	$16.80
REPLACEMENT PARTS	**CAT. NO.**	**PCS./PKG.**	**LIST/PC.**	**CAT. NO.**	**PCS./PKG.**	**LIST/PC.**	**CAT. NO.**	**PCS./PKG.**	**LIST/PC.**
Transparent Cover	HDTB-SBC-2	1	$ 4.50	HDTB-SBC-4	1	$ 5.50	HDTB-SBC-6	1	$ 8.00
Shorting screws	Shorting screws for HDTB Shorting blocks are available through our replacement hardware offering. For information on lead times and minimum order quantities, please contact our Customer First Team.								

*NOTE: Transparent cover is required to mount marking strip.
See pages 9 and 10 for Standard and Custom Printed Markers.
Marking Strips: 20 markers per package, 2 markers are used per terminal block.

High Density Shorting Terminal Blocks

c3controls' new High Density Shorting Terminal Blocks are an addition to our popular line of innovative and user-friendly High Density Terminal Blocks (HDTB). Expanding upon our feature rich HDTB, the Current Transformer Shorting Block provides ease of connecting systems to applications such as current transformers, switchgear, and tap points. Shorting blocks are available in 2, 4 and 6 pole configurations and can be ordered with optional terminal covers and markers.

Product features include:

- Rated 600 volts, 30A (unprepared wire) and 60A (prepared wire).
- Optional panel mounting or DIN rail mounting (35mm x 7.5mm or 35mm x 15mm).
- Shorting Blocks may be assembled with any combination of High Density Terminal Blocks next to one another on the same mounting rail.

SPECIAL FEATURES

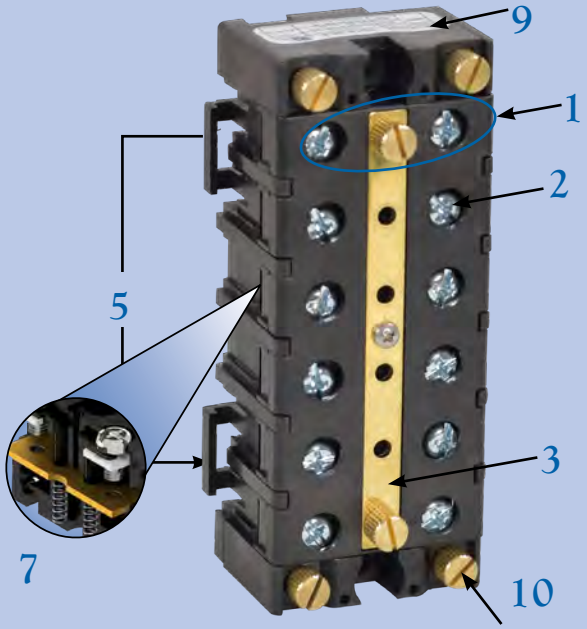

1. Out of the box and ready to install! Screws come in the backed-out position with convenient spring-return open terminals for easy wiring.
2. Combination head terminal screws allow the use of straight, phillips, or posidrive screwdrivers, making it easy to apply the proper terminal tightening torque for a more secure, quick, and easy installation.
3. Brass shorting strip to easily short terminals. CT Terminals can be shorted as per customer requirement.
4. Space provided to keep shorting terminal screws when not in use.
5. Integrated 35mm DIN Rail snap and panel mounting geometry.
6. Individual blocks can be quickly added or removed without disturbing adjacent blocks. Only a screwdriver is required.
7. Wiring is made easy by unobstructed access to terminals. Accommodates #18 to #10 AWG (unprepared) and #18 to #6 AWG (prepared) — up to two (2) ring lugs.

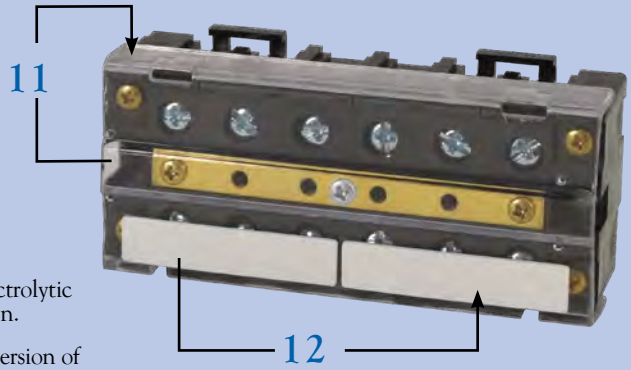

8. Integrated IP20 guards prevent accidental contact.
9. Housing is molded out of an unbreakable, high-quality thermoplastic.
10. Both Phillips and Thumb screws are Zinc plated and electrolytic brass for excellent conductivity and to minimize corrosion.
11. Factory supplied Transparent cover along with Phillips version of high-density shorting terminal block provides additional safety and protection.
12. Large marking strip available that can be hand marked or custom printed.
13. Directly interchangeable with GE EB27B06S terminal blocks.

IT'S EASY TO BUILD YOUR OWN TERMINAL MARKERS

Simply pick the code number from each of the sections below and combine them to build your part number.

HDTB Standard Marker Strips

MK – _____ – _____ _____

I *II* *III* *IV*

Example: To build one of our most popular Terminal Markers, the part number would be **MK + II + III + IV** or **MK-HDTB-SB-2-C-NS03-04H**

I. MARKER TYPE

CODE	DESCRIPTION
MK	HDTB & HDTB-SB Markers

COMING SOON:

MK-HDTB-SB-2-C & MK-HDTB-SB-4-C MARKER STRIPS

II. MARKER FIT

CODE	FOR SELECTION TABLE CODE	STANDARD PACKAGE QUANTITY (SPQ)	LIST (BLANK)	LIST (PRINTED)
HDTB-SB-2-C	A	10 Markers	$0.65/marker	$0.90/marker
HDTB-SB-4-C	B	10 Sets of Markers*	$1.30/set	$1.80/set
HDTB-SB-6-C	C	10 Sets of Markers*	$1.70/set	$2.20/set
HDTB-4	B	10 Markers	$0.85/marker	$1.10/marker
HDTB-6	C	10 Markers	$1.00/marker	$1.25/marker
HDTB-12	D	10 Sets of Markers*	$2.00/set	$2.50/set

*NOTE: 1 set = 2 markers. Total 20 markers per package. 2 markers are needed per terminal block.

III. MARKING OPTIONS - NUMBERS

SELECTION TABLE A
(for Marker Fit Code HDTB-SB-2-C)

CODE	STARTING DIGIT	ENDING DIGIT
NS01-02	01	02
NS02-03	02	03
NS03-04	03	04
NS04-05	04	05
NS05-06	05	06
NS06-07	06	07
NS07-08	07	08
NS08-09	08	09
NS09-10	09	10
NS10-11	10	11
NS11-12	11	12
NS12-13	12	13
NS13-14	13	14
NS14-15	14	15
NS15-16	15	16
NS16-17	16	17
NS17-18	17	18
NS18-19	18	19
NS19-20	19	20
NS20-21	20	21
NS21-22	21	22
NS22-23	22	23
NS23-24	23	24
NS24-25	24	25
NS25-26	25	26
NS26-27	26	27
NS27-28	27	28
NS28-29	28	29
NS29-30	29	30
NS30-31	30	31
NS31-32	31	32
NS32-33	32	33
NS33-34	33	34
NS34-35	34	35
NS35-36	35	36
NS36-37	36	37
NS37-38	37	38
NS38-39	38	39
NS39-40	39	40
NS40-41	40	41
NS41-42	41	42
NS42-43	42	43
NS43-44	43	44
NS44-45	44	45
NS45-46	45	46
NS46-47	46	47
NS47-48	47	48
NS48-49	48	49
NS49-50	49	50

SELECTION TABLE B
(for Marker Fit Codes HDTB-4 & HDTB-SB-4-C)

CODE	STARTING DIGIT	ENDING DIGIT
NS01-04	01	04
NS02-05	02	05
NS03-06	03	06
NS04-07	04	07
NS05-08	05	08
NS06-09	06	09
NS07-10	07	10
NS08-11	08	11
NS09-12	09	12
NS10-13	10	13
NS11-14	11	14
NS12-15	12	15
NS13-16	13	16
NS14-17	14	17
NS15-18	15	18
NS16-19	16	19
NS17-20	17	20
NS18-21	18	21
NS19-22	19	22
NS20-23	20	23
NS21-24	21	24
NS22-25	22	25
NS23-26	23	26
NS24-27	24	27
NS25-28	25	28
NS26-29	26	29
NS27-30	27	30
NS28-31	28	31
NS29-32	29	32
NS30-33	30	33
NS31-34	31	34
NS32-35	32	35
NS33-36	33	36
NS34-37	34	37
NS35-38	35	38
NS36-39	36	39
NS37-40	37	40
NS38-41	38	41
NS39-42	39	42
NS40-43	40	43
NS41-44	41	44
NS42-45	42	45
NS43-46	43	46
NS44-47	44	47
NS45-48	45	48
NS46-49	46	49
NS47-50	47	50

SELECTION TABLE C
(for Marker Fit Codes HDTB-6 & HDTB-SB-6-C)

CODE	STARTING DIGIT	ENDING DIGIT
NS01-06	01	06
NS02-07	02	07
NS03-08	03	08
NS04-09	04	09
NS05-10	05	10
NS06-11	06	11
NS07-12	07	12
NS08-13	08	13
NS09-14	09	14
NS10-15	10	15
NS11-16	11	16
NS12-17	12	17
NS13-18	13	18
NS14-19	14	19
NS15-20	15	20
NS16-21	16	21
NS17-22	17	22
NS18-23	18	23
NS19-24	19	24
NS20-25	20	25
NS21-26	21	26
NS22-27	22	27
NS23-28	23	28
NS24-29	24	29
NS25-30	25	30
NS26-31	26	31
NS27-32	27	32
NS28-33	28	33
NS29-34	29	34
NS30-35	30	35
NS31-36	31	36
NS32-37	32	37
NS33-38	33	38
NS34-39	34	39
NS35-40	35	40
NS36-41	36	41
NS37-42	37	42
NS38-43	38	43
NS39-44	39	44
NS40-45	40	45
NS41-46	41	46
NS42-47	42	47
NS43-48	43	48
NS44-49	44	49
NS45-50	45	50

SELECTION TABLE D
(for Marker Fit Code HDTB-12)

CODE	STARTING DIGIT	ENDING DIGIT
NS01-12	01	12
NS02-13	02	13
NS03-14	03	14
NS04-15	04	15
NS05-16	05	16
NS06-17	06	17
NS07-18	07	18
NS08-19	08	19
NS09-20	09	20
NS10-21	10	21
NS11-22	11	22
NS12-23	12	23
NS13-24	13	24
NS14-25	14	25
NS15-26	15	26
NS16-27	16	27
NS17-28	17	28
NS18-29	18	29
NS19-30	19	30
NS20-31	20	31
NS21-32	21	32
NS22-33	22	33
NS23-34	23	34
NS24-35	24	35
NS25-36	25	36
NS26-37	26	37
NS27-38	27	38
NS28-39	28	39
NS29-40	29	40
NS30-41	30	41
NS31-42	31	42
NS32-43	32	43
NS33-44	33	44
NS34-45	34	45
NS35-46	35	46
NS36-47	36	47
NS37-48	37	48
NS38-49	38	49
NS39-50	39	50

IV. ORIENTATION OPTIONS

CODE	DESCRIPTION
H	Printed w/Horizontal Orientation
V	Printed w/Vertical Orientation

DISCOUNT SCHEDULE **G**

Marker Orientation

Horizontal

Vertical

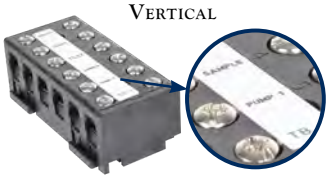

Custom Marker Strips

MK-CM-HDTB marking strips can be custom printed providing unique markers for any application. These markers are available in different sizes. Both alpha and numeric characters and symbols can be printed on the markers. Note: Custom markers are not available for same day shipping.

CUSTOM PRINTED MARKER STRIP PRODUCT GUIDE			
CODE	**FOR USE WITH**	**STANDARD PACKAGE QUANTITY (SPQ)**	**LIST / SET**
MK-CM-HDTB-SB-2-C	HDTB-SB-2-C	100 Markers	$1.75
MK-CM-HDTB-SB-4-C	HDTB-SB-4-C	50 sets of Markers*	$3.50
MK-CM-HDTB-SB-6-C	HDTB-SB-6-C	50 sets of Markers*	$4.00
MK-CM-HDTB-4	HDTB-4	100 Markers	$2.00
MK-CM-HDTB-6	HDTB-6	100 Markers	$2.75
MK-CM-HDTB-12	HDTB-12	50 sets of Markers*	$5.50
*NOTE: These terminal blocks require two markers each. Markers are sold as a set (1 set = 2 markers).			

Custom Printing set-up Fees

Our plotter system and software have almost unlimited capabilities for printing custom terminal block markers. The user-friendly operator views work on a "what you see is what you get" principle. Meaning you can adjust character size and type, rotate characters, and plot symbols from Excel files.

The maximum number of markers in one file is 200.

Each custom marker package includes 100 pieces, allowing you to print up to 100 unique markings. See the image below for an example.

HDTB-M4 Marker

1	2	3	4
a	b	c	d
11	22	33	44
P	Q	R	S
123	456	789	0
#	%	&	*
1A	2b	3c	4d

You can download the Marker Template file from our website, fill out the Questionnaire section along with your desired markings, and send it back to us. The naming convention for the Marker template file will be the PO number. For example: "33601-1.xls" (where 33601 represents your purchase order number, and -1, -2, -3 represents the number of files submitted).

33601-1.xls
33601-2.xls
33601-3.xls

Note: It is necessary to submit the Marker Template file with all its tabs (Questionnaire tab and the Markings tab).

If you submit the Marker Template file with us, NO FEE will be charged. However, if you choose not to submit the file and request c3controls to generate the markings on your behalf, then there is a $50 fee.

If you have questions regarding custom printing, contact our customer first team at 724.775.7926.

Uppercase

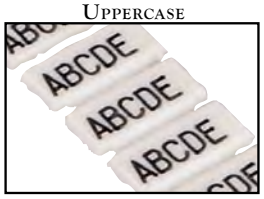

Lowercase

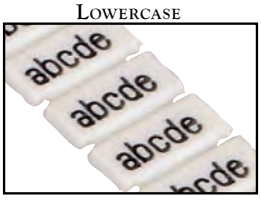

DIN RAIL

We offer two types of 35mm symmetrical DIN rails; steel and aluminum. Our steel DIN rail is zinc with clear chromate plated and is available in either 1m (3.28ft.) or 2m (6.56ft.). The aluminum version is available in 1m (3.28ft.). Each simply fasten by screws to the mounting surface - no special brackets or hardware are needed. Terminal blocks easily snap on to rail.

CODE	DESCRIPTION	PCS./PKG.	LIST/PC.
	PLATED STEEL		
DRMR3	DIN Rail 1 Meter (35mm x 7.5mm)	1	$ 9.70
DRMR6	DIN Rail 2 Meters (35mm x 7.5mm)	10	$19.20
DRMR3D	DIN Rail 1 Meter (35mm x 15mm)	1	$14.40
DRMR6D	DIN Rail 2 Meters (35mm x 15mm)	10	$27.60
	ALUMINUM		
DRMR3A	DIN Rail 1 Meter (35mm x 7.5mm)	1	$16.80

2 POINT JUMPER

Our 2-Point Jumper connects two adjacent HDTB terminals, offering a durable and easy-to-install solution that simplifies wiring setups.

CODE	DESCRIPTION	PCS./PKG.	LIST/PC.
HDTB-J2	2 Point Jumper for High Density Terminal Blocks For use with: HDTB-4, HDTB-6, HDTB-12	50	$ 1.15

DISCOUNT SCHEDULE **G**

HIGH DENSITY TERMINAL BLOCKS

HDTB-4

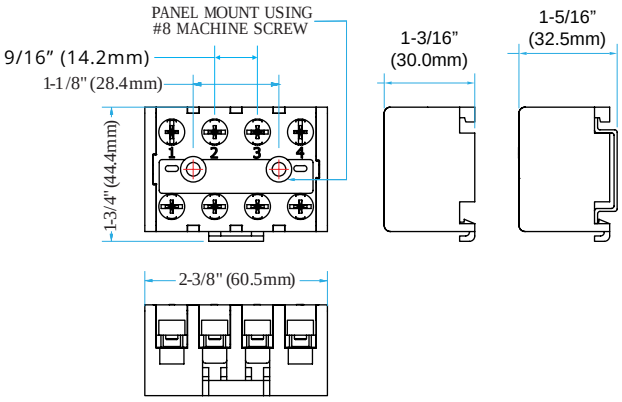

HDTB-6

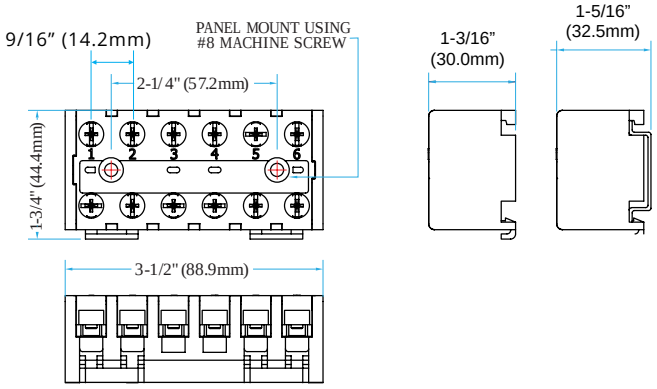

HDTB-12

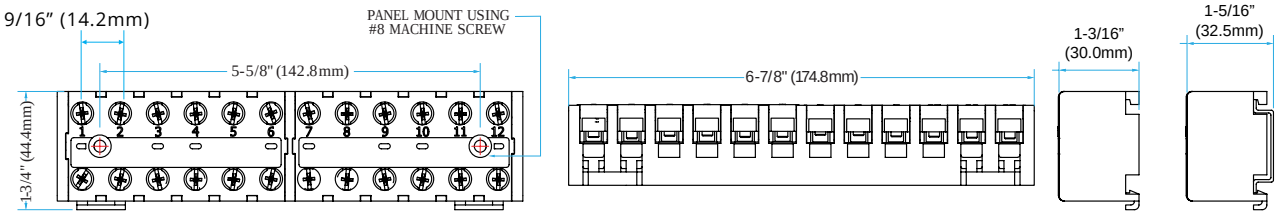

HIGH DENSITY SHORTING TERMINAL BLOCKS

HDTB-SB-2

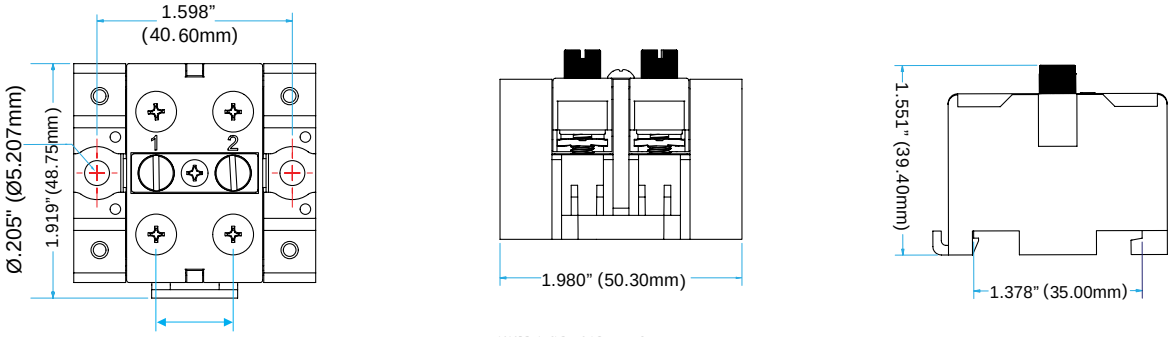

HDTB-SB-2-C

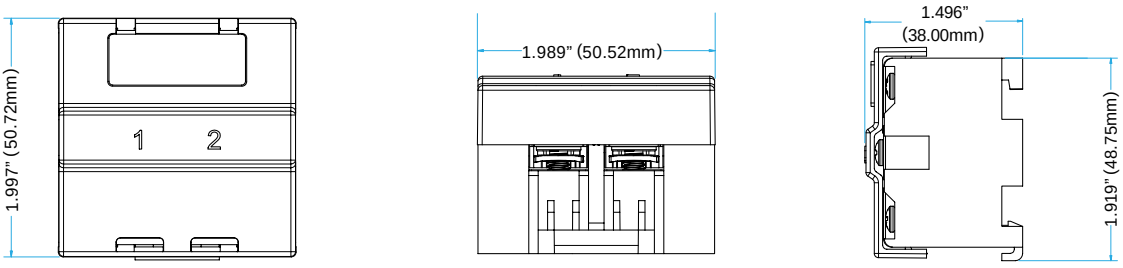

HIGH DENSITY SHORTING TERMINAL BLOCKS

HDTB-SB-4

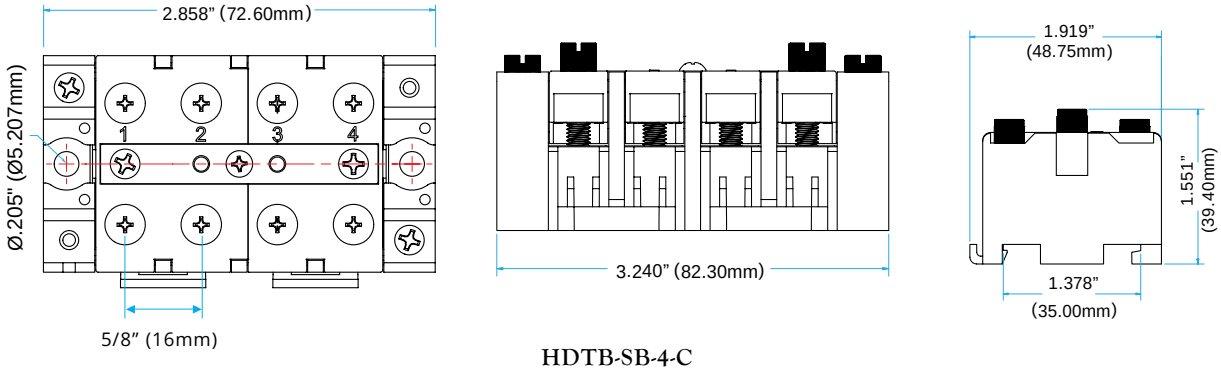

HDTB-SB-4-C

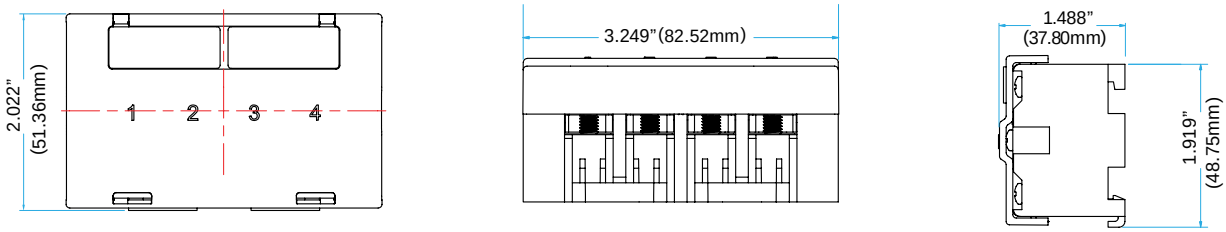

HDTB-SB-6

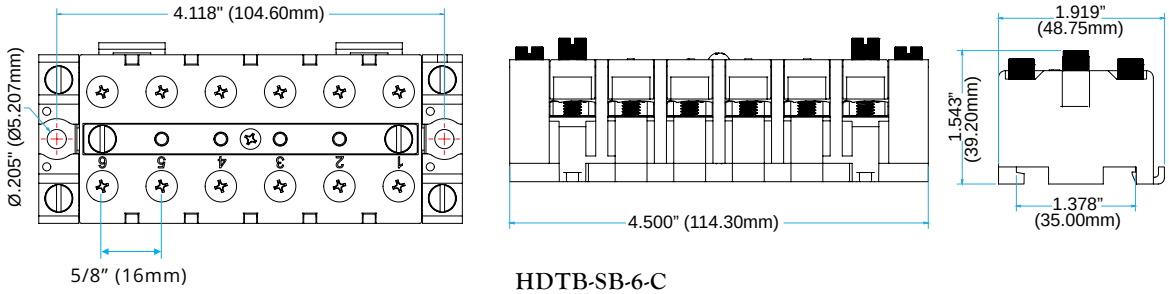

HDTB-SB-6-C

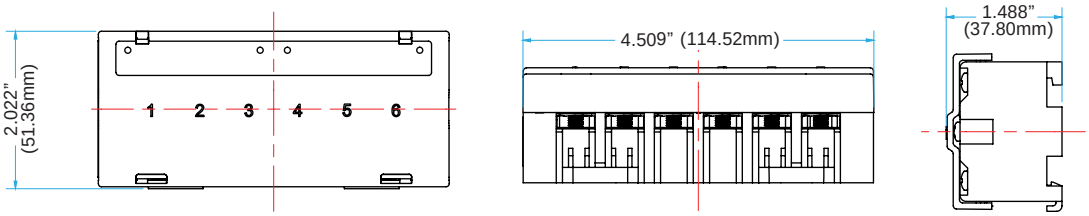

HIGH DENSITY TERMINAL BLOCK MARKERS

MK-HDTB-SB-2-C / MK-HDTB-SB-4-C

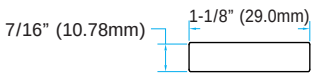

MK-HDTB-4 / MK-HDTB-SB-6-C

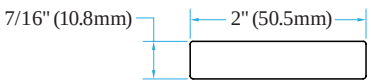

MK-HDTB-6 / MK-HDTB-12

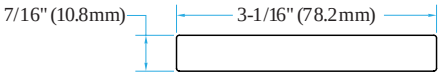

ELECTRONIC TIMING RELAYS

series ETR

c3controls Series ETR Electronic Timing Relays include a variety of devices with single, dual, and multi-functions to satisfy the most basic to highly complex timing applications. Their compact size (17.5mm, 22.5mm, and 45mm wide) and DIN Rail, Panel, Socket, and enclosure door mounting flexibility ensures they can be installed in virtually any control panel. Devices are available with multi-voltage supply design to help reduce inventory requirements.

Section 25

Selection Guide & Timing Charts	4
17.5mm Electronic Timing Relays (DIN Rail)	6
22.5mm Electronic Timing Relays (DIN Rail or Panel Mount)	11
45mm Socket Mount Electronic Timing Relays (Door or Panel Mount, DIN Rail)	18
Dimensions	22

PROVEN

Conformity to Standards:
UL 61010-1, 508
C22.2 No. 61010-1, No. 14
IEC 61000-4

Certifications:
UL File #: E329857 (Guide QUYX2, QUYX8), E68568 (Guide NKCR, NKCR8)

CE Marked (per EU Low Voltage Directive 2006/95/EC, EMC 2004/108/EC and RoHS Directive 2011/65/EU)

Visit www.c3controls.com to download product certifications.

NOTE: The scope (range, description, price, specifications, dimensions, etc.) of the product featured in this section is subject to change without notice. Refer to www.c3controls.com for product updates.

REVISION 04.2025

ELECTRONIC TIMING RELAYS

c3controls offers a comprehensive line of Electronic Timing Relays, just one example of our superior products designed and manufactured to meet the needs of the machine builder. Check out all the features of our Series ETR timing relays below!

COMPACT AND EFFICIENT TIMING RELAYS FOR SUPERIOR ACCURACY.

✓ **Proven**	Our electronic timing relays meet UL and IEC Standards requirements making them suitable for use in global applications.
✓ **Various Sizes**	Our product line includes timing relays in 17.5mm, 22.5mm, and 45mm form factors.
✓ **Wide Range of Operation**	Wide variety of operating modes satisfies virtually any application: ON-Delay, Interval Delay, Pulse Output, Cycle (ON/OFF), Delay on Make/Delay on Break, and more.
✓ **Compact Size**	Compact design—reduces panel space requirements and is interchangeable with commonly available timing relays.
✓ **Tripping Accuracy**	Our ETRs feature a repeat tripping accuracy of 0.5%, for precise control application performance.
✓ **Superior Protection**	The IP20 terminals guard against accidental contact with live parts for enhanced protection.
✓ **Secure Installation**	Quick and simple installation on a 35mm DIN Rail or panel mounted in high-vibration applications.
✓ **Multi-Voltage Capability**	Most ETRs accept a range of voltage supply inputs. (see Selection Table or individual ETR model for capabilities)
✓ **AC/DC Load Switching**	Our ETRs feature hard contact outputs.
✓ **36-Month Warranty***	Every product is backed by our 36-Month Warranty—giving you confidence in the quality, reliability, and performance of components designed for the most demanding applications.
✓ **Guaranteed Same-Day Shipping***	Product availability reduces inventory, and improves cash-flow—saving you money. With c3controls any order for standard catalog items received by 6:00pm ET is guaranteed to ship same-day.
✓ **Advantage Pricing**	Our approach to product development, manufacturing, and focus on servicing the OEM and Electrical Equipment Builder reduces cost. The result—the best value in the industry.

*See c3controls Terms & Conditions

> *c3controls has proven time and time again to have better product availability and customer service than most of the larger companies we work with.*

Steve Velasquez, Industrial Sales • **Broken Arrow Electric Supply**

17.5mm Wide
DIN Rail

22.5mm Wide
DIN Rail/Panel Mount

45mm Socket Mount
Door or Panel Mount, DIN Rail

UNIQUE PRODUCT LINE FEATURES

CONVENIENT OPERATION

Easily select operating modes and timing ranges with accessible setting dials and DIP switches.

TRANSPARENT COVER

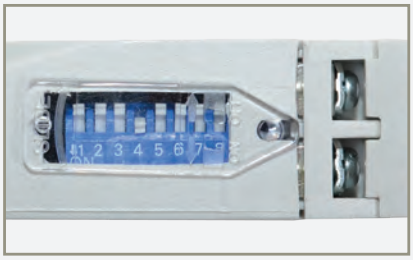

We've protected the DIP switches with a transparent cover that keeps out dust and other contaminants and allows you to see the switch settings.

QUICK TROUBLESHOOTING

Power ON and relay ON LED indicators make troubleshooting effortless.

CLEAR MARKINGS

We've clearly marked the terminals, operating modes and DIP switches, and imprinted connection diagrams to reduce downtime when commissioning and wiring during installation and while troubleshooting.

FIND IT FAST

Electronic Timing Relays

- Certifications
- Specifications
- Dimension Drawings
- Installation Instructions
- Easy to Buy

www.c3controls.com

ETR SELECTION GUIDE

Match the functions you need in the far left column to the corresponding model along the top of the chart.

Function	ETR-D17MF1-03H-1CMV4	ETR-D22DEI-30H-2CMV1	ETR-D22SS-60S-2XD	ETR-S45DEI-30H-2CMV1
Timing Functions				
Delay				
ON-Delay (Energize Delay)	✓	✓		✓
Interval Delay	✓	✓		✓
Pulse Output	✓			
Cyclic				
Repeat Cycle Equal (ON First)	✓			
Repeat Cycle Equal (OFF First)	✓			
Delay On Make or Break				
Delay on Break	✓			
Delay on Break with Totalize	✓			
Delay on Make/Delay on Break	✓			
Interval				
Interval After Break	✓			
Interval with Totalize	✓			
Latching Relay	✓			
Single Shot				
Single Shot	✓			
Re-Triggerable Single Shot	✓			
Special				
Star (Wye) Delta			✓	
Other Characteristics				
Dimensions (mm)	17.5	22.5	22.5	45
Mounting	DIN, Panel	DIN, Panel	DIN, Panel	Door, DIN, Panel
Quantity of Timing Ranges	10	12	2	12
Timing Ranges ("<" means "less than")	< 1 sec to 3 hrs	< 1 sec to 30 hrs	1 sec to 1 min	< 1 sec to 30 hrs
Types	Delay	Delay	Startup Delay, Changeover Delay	Delay
Control Contact (Input)	✓			
Output Contact(s) (C/O = Changeover, NO = Normally Open)	SPDT (1 C/O)	DPDT (2 C/O)	Star (Wye): 1 SPDT (1 C/O) Delta: 1 SPDT (1 C/O)	DPDT (2 C/O)
Line Power (Voltage)				
110V 50Hz / 120V 60Hz AC			✓	
400-415V 50Hz AC			✓	
20-240V AC (50/60Hz) & 12-240V DC	✓	✓		✓

Timing Charts:

On Delay (Energize Delay)

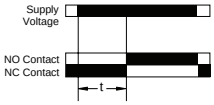

t = set time delay

Delay on Break

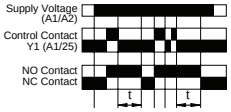

t = set time delay

Interval with Totalize (time storage)

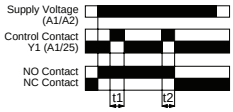

t1 = t2 = set time delay

Off Delay (De-energize Delay)

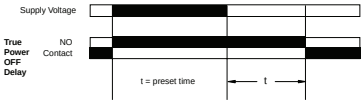

Interval on Make / Interval on Break

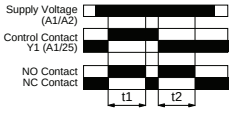

t = set time delay

Single Shot

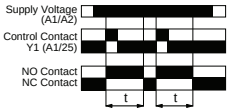

t = set time delay

Interval Delay

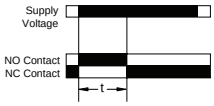

t = set time delay

Delay on Make with Totalize (Time Storage)

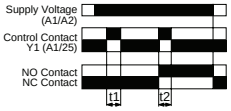

t1 + t2 = set time delay

Retriggerable Single Shot

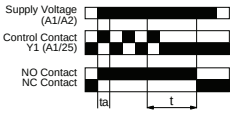

t = set time delay
ta < t

Pulse Output

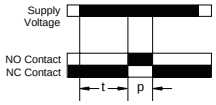

t = set time delay
p = 500 msec

Delay on Make / Delay on Break

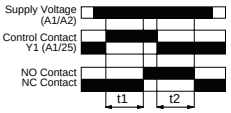

t1 = t2 = t
t = set time delay

Star (Wye) Delta

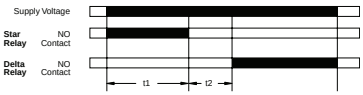

t1 = run up time
t2 = change-over time

Repeat Cycle Equal (on first)

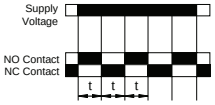

t = set time delay

Repeat Cycle Equal (off first)

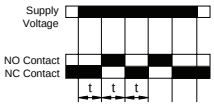

t = set time delay

Interval after Break

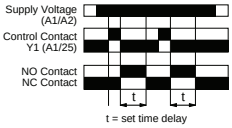

t = set time delay

IT'S EASY TO BUILD YOUR OWN ELECTRONIC TIMING RELAY

Simply pick the code number from each of the sections below and combine them to build your part number.

17.5mm Multi-Function — 10 Range Electronic Timing Relays

ETR – D17 MF1 – 03H – 1C MV4
I II III IV V VI

Example: To build one of our most popular Electronic Timing Relays, the part number would be **I + II + III + IV + V + VI** or **ETR-D17MF1-03H-1CMV4**

I. RELAY TYPE

CODE	DESCRIPTION
ETR	Electronic Timing Relay

II. FRAME SIZE AND MOUNTING METHOD

CODE	FRAME SIZE	MOUNTING METHOD
D17	17.5mm (11/16") Wide	35mm DIN Rail

III. TIMING FUNCTIONS

CODE	SINGLE/DUAL/MULTI	OPERATING MODES	LIST
MF1	Multi-Function	ON-Delay (Energize Delay), Interval Delay, Pulse Output, Repeat Cycle Equal (OFF first), Repeat Cycle Equal (ON first), Delay on Break, Delay on Break with Totalize, Delay on Make/Delay on Break, Interval after Break, Interval with Totalize, Latching Relay, Single Shot, Re-Triggerable Single Shot	$56.00

IV. TIMING RANGE

CODE	MAXIMUM TIMING RANGE	SETTABLE TIMING RANGES
03H	3 Hours	Seconds: 1 / 3 / 10 / 30 Minutes: 1 / 3 / 10 / 30 Hours: 1 / 3

V. OUTPUT CONTACT AND RATING

CODE	OUTPUT TYPE	OUTPUT RATING
1C	SPDT (1 Changeover)	5A @ 250V AC, 24V DC Resistive

VI. SUPPLY VOLTAGE

CODE	DESCRIPTION	VOLTAGE RANGE
MV4	Multi-Voltage	20 ~ 240V AC (50/60 Hz) and 12 ~ 240V DC

DISCOUNT SCHEDULE G

17.5mm Multi-Function—10 Range Electronic Timing Relays

This c3controls Series ETR Electronic Timing Relay offers maximum functionality and timing ranges in a compact, 17.5mm (11/16") wide housing. The multi-function (with 13 operating modes) timing relay with its multi-voltage supply design (12V ~ 240V DC and 20V ~ 240V AC) is an ideal solution for more complex applications. Like all of c3controls other products, these devices are UL approved and CE marked, making them suitable for use in global applications. Look and see how the Series ETR Electronic Timing Relays can help you reduce your total installed costs and enhance the performance of your equipment.

Product features include:

- Multi-Function, 10 Range
- Timing ranges from 1 second to 3 hours.
- Wide variety of operating modes to satisfy virtually any control application requirement: ON-Delay (Energize Delay), Interval Delay, Pulse Output, Repeat Cycle Equal (OFF first), Repeat Cycle Equal (ON first), Delay on Break, Delay on Break with Totalize, Delay on Make/Delay on Break, Interval after Break, Interval with Totalize, Latching Relay, Single Shot, and Re-Triggerable Single Shot.
- Repeat tripping accuracy of 0.5% for precise control application performance.
- Accepts multi-voltage supply input from 12V to 240V DC and 20V to 240V AC, reduces inventory requirements.
- Compact design, only 17.5mm (11/16") wide – reduces panel space requirements and is smaller than most commonly available timing relays.
- SPDT hard contact for switching AC (5A @ 250V) and DC (5A @ 24V) loads.
- Fast and easy installation on a 35mm DIN rail reduces installation time and costs.
- IP20 terminals guard against accidental contact with live parts by service personnel.
- UL Approved, CE Marked, and RoHS compliant.

UNIQUE PRODUCT FEATURES

1. User selectable operating modes and timing ranges with convenient, front accessible setting dials.
2. LED indication of Power ON and Relay ON – for fast and easy troubleshooting.
3. Terminals and connection diagrams are clearly marked on the timing relay for easy commissioning, wiring, and troubleshooting – reduces downtime and installation time.

Specifications:

17.5MM MULTI-FUNCTION — 10 RANGE ELECTRONIC TIMING RELAYS		
	UNITS	
TIMING PERFORMANCE		
Operating Modes		ON-Delay (Energize Delay), Interval Delay, Pulse Output, Repeat Cycle Equal (OFF first), Repeat Cycle Equal (ON first), Delay on Break, Delay on Break with Totalize, Delay on Make/Delay on Break, Interval after Break, Interval with Totalize, Latching Relay, Single Shot, Re-Triggerable Single Shot
Timing Ranges		Seconds: 1 / 3 / 10 / 30 Minutes: 1 / 3 / 10 / 30 Hours: 1 / 3
Accuracy		
Setting		± 5% of full scale
Repeat		± 0.5% of full scale or 50 msec. whichever is greater
Reset		On interruption of power
Reset Time		Less than 100 msec.
LED Indication		Power ON and Relay ON
Output Contact		SPDT (1 Changeover)
ELECTRICAL		
Operating Voltage		20 ~ 240V AC (AC: 50/60 Hz), 12 ~ 240V DC
Power Consumption	VA	3.2 Max.
Output Rating		5A @ 250V AC, 24V DC Resistive
ENVIRONMENTAL		
Ambient Operating Temperature	°C / °F	-30 to +50 / -22 to +122
Ambient Storage Temperature	°C / °F	-30 to +75 / -22 to +167
Humidity		95% Relative Humidity (Non-condensing)
Altitude	m / ft.	2,000 / 6,528
CONSTRUCTION		
Ingress Protection		
Terminals (Timer Body)		IP20
Terminal Capacity		
Solid Strand	mm^2	1 x 2.5 ~ 2 x 1.5
Fine Strand	mm^2	1 x 2.5 ~ 2 x 0.75
	AWG	14 ~ 18
Tightening Torque	Nm	0.8
	Lb-in.	7
Weight	g	64
	oz.	2.3
ROHS COMPLIANCE		For RoHS Compliance documentation by product, refer to www.c3controls.com

Operating Modes:

Function: On Delay

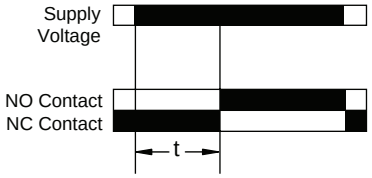

t = set time delay

Function: Interval Delay

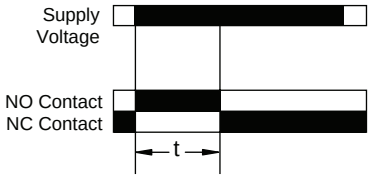

t = set time delay

Function: Pulse Output

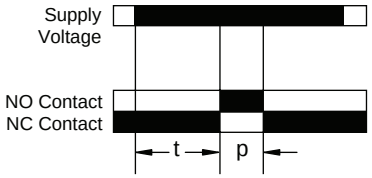

t = set time delay
p = 500 msec

Function: Repeat Cycle Equal (off first)

t = set time delay

Function: Repeat Cycle Equal (on first)

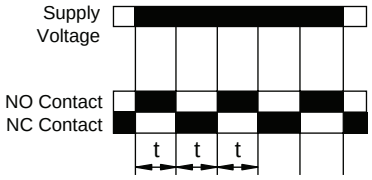

t = set time delay

Function: Delay on Break

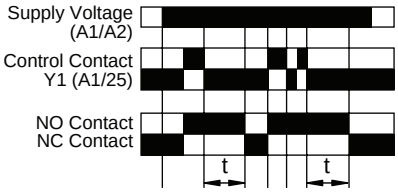

t = set time delay

Function: Delay on Break with Totalize (time storage)

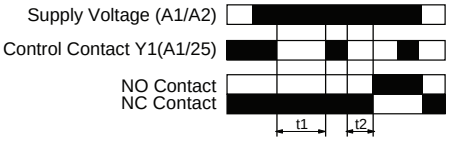

t1 + t2 = set time delay

Function: Delay on Make / Delay on Break

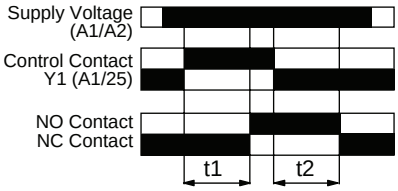

t1 = t2 = t
t = set time delay

Function: Interval after Break

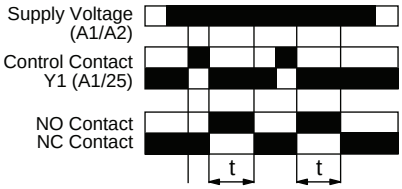

t = set time delay

Function: Interval with Totalize (time storage)

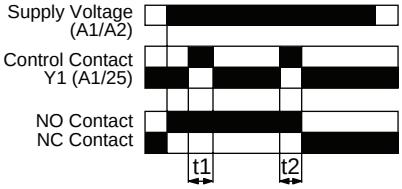

t1 = t2 = set time delay

Operating Modes:

Function: Latching Relay

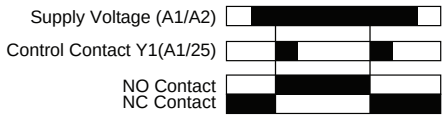

Function: Retriggerable Single Shot

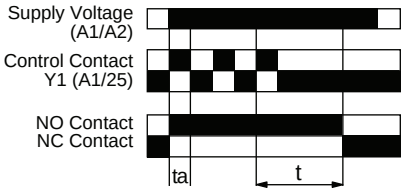

t = set time delay
ta < t

Function: Single Shot

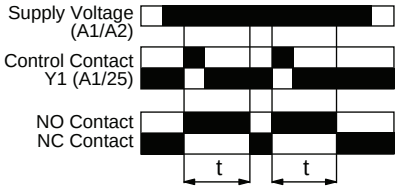

t = set time delay

Terminal Diagram:

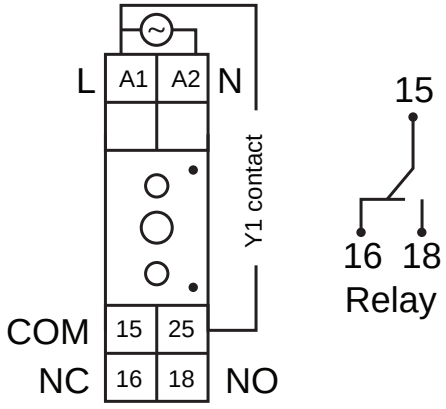

IT'S EASY TO BUILD YOUR OWN ELECTRONIC TIMING RELAY

Simply pick the code number from each of the sections below and combine them to build your part number.

22.5mm Dual-Function — 12 Range Electronic Timing Relays

ETR – D22 DEI – 30H – 2C MV1
I II III IV V VI

Example: To build one of our most popular Electronic Timing Relays, the part number would be **I + II + III + IV + V + VI** or **ETR-D22DEI-30H-2CMV1**

I. RELAY TYPE

CODE	DESCRIPTION
ETR	Electronic Timing Relay

II. FRAME SIZE AND MOUNTING METHOD

CODE	FRAME SIZE	MOUNTING METHOD
D22	22.5mm (7/8") Wide	35mm DIN Rail and Panel Mount

III. TIMING FUNCTIONS

CODE	SINGLE/DUAL/MULTI	OPERATING MODES	LIST
DEI	Dual-Function	ON-Delay (Energize Delay) and Interval Delay	$84.00

IV. TIMING RANGE

CODE	MAXIMUM TIMING RANGE	SETTABLE TIMING RANGES
30H	30 Hours	Seconds: 1 / 3 / 10 / 30 Minutes: 1 / 3 / 10 / 30 Hours: 1 / 3 / 10 / 30

V. OUTPUT CONTACT AND RATING

CODE	OUTPUT TYPE	OUTPUT RATING
2C	DPDT (2 Changeover)	5A @ 250V AC, 24V DC Resistive

VI. SUPPLY VOLTAGE

CODE	DESCRIPTION	VOLTAGE RANGE
MV1	Multi-Voltage	20 ~ 240V AC (50/60 Hz) and 12 ~ 240V DC

DISCOUNT SCHEDULE G

22.5mm Electronic Timing Relays

These c3controls Series ETR Electronic Timing Relays include a variety of single function, dual-function, and multi-function relays with up to 12 timing ranges in a compact, 22.5mm (7/8") wide housing. This industry standard dimension makes these devices interchangeable with many commonly available electronic timers. Economical, simple dual-function, 12 range relay available for applications with the most basic timing requirements. For applications requiring more special operating modes, Off-Delay and Star (Wye) Delta, timing relays are available. These electronic timing relays are also available with a multi-voltage supply design (20V ~ 240V AC and 12V ~ 240V DC) – enabling inventories to be reduced. Like all of c3controls other products, these devices are UL approved and CE marked, making them suitable for use in global applications. Look and see how the Series ETR Electronic Timing Relays can help you reduce your total installed costs and enhance the performance of your equipment.

Product features include:

- Four versions available:
  - Economical, Dual-Function, 12 Range
    - ON-Delay and Interval Delay
    - Timing ranges from 1 second to 30 hours
  - Single-Function
    - OFF-Delay and Star-Delta (Wye-Delta)
    - Timing ranges – varies by function, refer to the specifications for each timing relay
- Repeat tripping accuracy of 0.5% for precise control application performance.
- Versions available that accept multi-voltage supply input from 20V to 240V AC and 12V to 240V DC, reduces inventory requirements.
- Compact design, only 22.5mm (7/8") wide – reduces panel space requirements and is interchangeable with commonly available timing relays.
- SPDT and DPDT hard contacts for switching AC (5A @ 250V) and DC (5A @ 24V) loads.
- Fast and easy installation on a 35mm DIN rail or panel mounting for high vibration applications – reduces installation time and costs.
- IP20 terminals guard against accidental contact with live parts by service personnel.
- UL Approved, CE Marked, and RoHS compliant.

UNIQUE PRODUCT FEATURES

1. User selectable operating modes and timing ranges with convenient, front and top accessible setting dials and DIP switches.
2. DIP switches are protected by a cover to prevent the ingress of dust and other contaminants. Cover is transparent so the switch settings can be easily checked.
3. LED indication of Power ON and Relay ON – for fast and easy troubleshooting.
4. Terminals, connection diagrams, operating modes, and DIP switch settings are clearly marked on the timing relay for easy commissioning, wiring, and troubleshooting – reduces downtime and installation time.

Specifications:

22.5MM DUAL-FUNCTION — 12 RANGE ELECTRONIC TIMING RELAYS		
	UNITS	
TIMING PERFORMANCE		
Operating Modes		ON-Delay (Energize Delay) and Interval Delay
Timing Ranges		Seconds: 1 / 3 / 10 / 30 Minutes: 1 / 3 / 10 / 30 Hours: 1 / 3 / 10 / 30
Accuracy		
Setting		± 5% of full scale
Repeat		± 0.5% of full scale or 50 msec. whichever is greater
Reset		On interruption of power
Reset Time		Less than 100 msec.
LED Indication		Power ON and Relay ON
Output Contact		DPDT (2 Changeover)
ELECTRICAL		
Operating Voltage		20 ~ 240V AC (50/60 Hz) and 12 ~ 240V DC
Operating Voltage Limits	%	85 to 110
Power Consumption	VA	2 Max.
Output Rating		5A @ 250V AC, 24V DC Resistive
ENVIRONMENTAL		
Ambient Operating Temperature	°C / °F	-30 to +50 / -22 to +122
Ambient Storage Temperature	°C / °F	-30 to +75 / -22 to +167
Humidity		95% Relative Humidity (Non-condensing)
Altitude	m / ft.	2,000 / 6,528
CONSTRUCTION		
Ingress Protection		
Terminals (Timer Body)		IP20
Terminal Capacity		
Solid Strand	mm^2	1 x 2.5 ~ 2 x 1.5
Fine Strand	mm^2	1 x 2.5 ~ 2 x 0.75
	AWG	14 ~ 18
Tightening Torque	Nm	0.8
	Lb-in.	7.0
Weight	g	100
	oz.	3.5
ROHS COMPLIANCE		For RoHS Compliance documentation by product, refer to www.c3controls.com

Operating Modes:

Function: On Delay

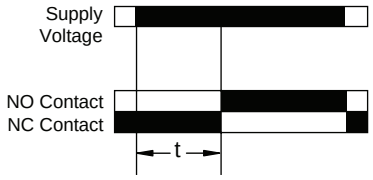

t = set time delay

Function: Interval Delay

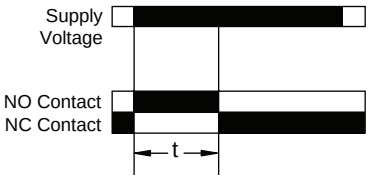

t = set time delay

Terminal Diagram:

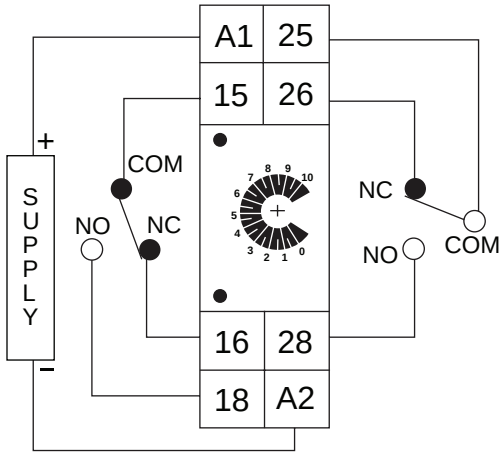

IT'S EASY TO BUILD YOUR OWN ELECTRONIC TIMING RELAY

Simply pick the code number from each of the sections below and combine them to build your part number.

22.5mm Star (Wye) Delta Electronic Timing Relays

ETR – D22 SS – 60S – 2X _____

I II III IV V VI

Example: To build one of our most popular Electronic Timing Relays, the part number would be **I + II + III + IV + V + VI** or **ETR-D22SS-60S-2XD**

I. RELAY TYPE

CODE	DESCRIPTION
ETR	Electronic Timing Relay

II. FRAME SIZE AND MOUNTING METHOD

CODE	FRAME SIZE	MOUNTING METHOD
D22	22.5mm (7/8") Wide	35mm DIN Rail and Panel Mount

III. TIMING FUNCTIONS

CODE	SINGLE/DUAL/MULTI	OPERATING MODES	LIST
SS	Single-Function	Star-Delta (Wye-Delta)	$67.00

IV. TIMING RANGE

CODE	MAXIMUM TIMING RANGE	SETTABLE TIMING RANGES
60S	60 Seconds (Starting Time)	Starting Time: 30 / 60 seconds Changeover Time: 50 / 100 milli-seconds

V. OUTPUT CONTACT AND RATING

CODE	OUTPUT TYPE	OUTPUT RATING
2X	1 SPDT (1 Changeover) for Star (Wye) and 1 SPDT (1 Changeover) for Delta	5A @ 250V AC, 24V DC Resistive

VI. SUPPLY VOLTAGE

CODE	DESCRIPTION	VOLTAGE RANGE
D	Fixed Voltage	110V 50 Hz / 120V 60 Hz

DISCOUNT SCHEDULE G

Specifications:

22.5MM STAR (WYE) DELTA ELECTRONIC TIMING RELAYS		
	UNITS	
TIMING PERFORMANCE		
Operating Modes		Star-Delta (Wye Delta)
Timing Ranges		Starting Time: 30 / 60 seconds Changeover Time: 40 / 100 milli-seconds
Accuracy		
Setting		± 5% of full scale
Repeat		± 0.5% of full scale or 50 msec. whichever is greater
Reset		On interruption of power
Reset Time		Less than 100 msec.
LED Indication		Star (Wye) Relay "ON", Delta Relay "ON"
Output Contact		1 SPDT (1 Changeover) for Star (Wye) and 1 SPDT (1 Changeover) for Delta
ELECTRICAL		
Operating Voltage		110V 50 Hz / 120V 60 Hz
Operating Voltage Limits	%	85 to 110
Power Consumption	VA	10 Max.
Output Rating		5A @ 250V AC, 24V DC Resistive
ENVIRONMENTAL		
Ambient Operating Temperature	°C / °F	-30 to +50 / -22 to +122
Ambient Storage Temperature	°C / °F	-30 to +75 / -22 to +167
Humidity		95% Relative Humidity (Non-condensing)
Altitude	m / ft.	2,000 / 6,528
CONSTRUCTION		
Ingress Protection		
Terminals (Timer Body)		IP20
Terminal Capacity		
Solid Strand	mm^2	1 x 2.5 ~ 2 x 1.5
Fine Strand	mm^2	1 x 2.5 ~ 2 x 0.75
	AWG	14 ~ 18
Tightening Torque	Nm	0.8
	Lb-in.	7.0
Weight	g	130
	oz.	4.6
ROHS COMPLIANCE		For RoHS Compliance documentation by product, refer to www.c3controls.com

Operating Mode:

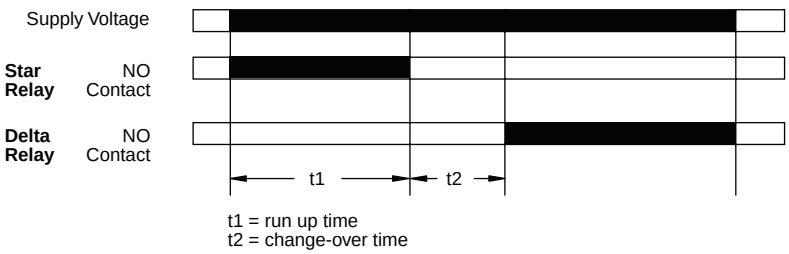

Wiring Diagrams:

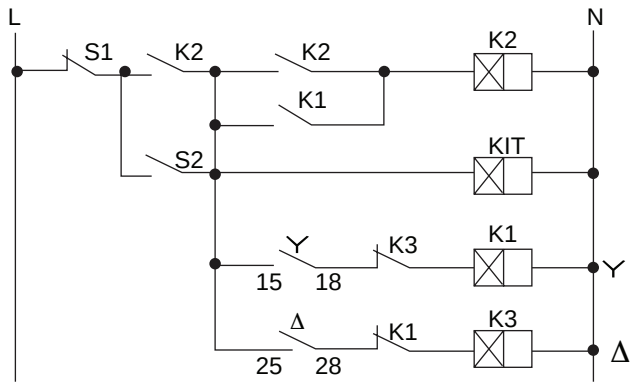

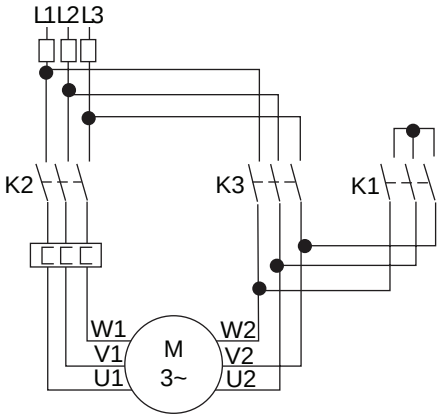

Terminal Diagram:

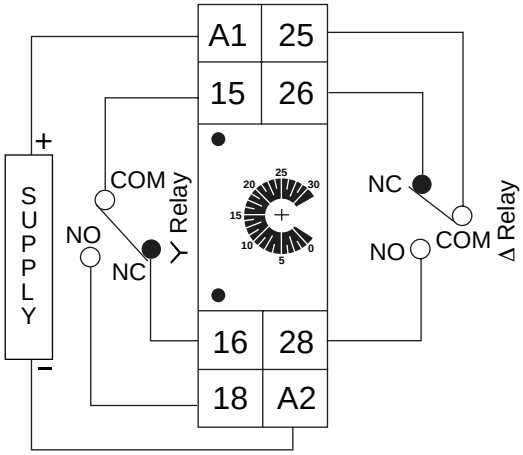

IT'S EASY TO BUILD YOUR OWN ELECTRONIC TIMING RELAY

Simply pick the code number from each of the sections below and combine them to build your part number.

45mm Socket Mount Dual-Function — 12 Range Electronic Timing Relays

ETR – S45 DEI – 30H – 2C MV1
I II III IV V VI

Example: To build one of our most popular Electronic Timing Relays, the part number would be **I + II + III + IV + V + VI** or **ETR-S45DEI-30H-2CMV1**

I. RELAY TYPE

CODE	DESCRIPTION
ETR	Electronic Timing Relay

II. FRAME SIZE AND MOUNTING METHOD

CODE	FRAME SIZE	MOUNTING METHOD
S45	45mm (1-3/4") Wide x 45mm (1-3/4") High (1/16 DIN)	Door or Panel Mount, 35mm DIN Rail 8 Pin Socket Mount (Cat. No. 210-SP0810B Note: Detach plastic retainer clip supplied with socket)

III. TIMING FUNCTIONS

CODE	SINGLE/DUAL/MULTI	OPERATING MODES	LIST
DEI	Dual-Function	ON-Delay (Energize Delay) and Interval Delay	$118.00

IV. TIMING RANGE

CODE	MAXIMUM TIMING RANGE	SETTABLE TIMING RANGES
30H	30 Hours	Seconds: 1 / 3 / 10 / 30 Minutes: 1 / 3 / 10 / 30 Hours: 1 / 3 / 10 / 30

V. OUTPUT CONTACT AND RATING

CODE	OUTPUT TYPE	OUTPUT RATING
2C	DPDT (2 Changeover)	5A @ 250V AC, 24V DC Resistive

VI. SUPPLY VOLTAGE

CODE	DESCRIPTION	VOLTAGE RANGE
MV1	Multi-Voltage	20 ~ 240V AC (50/60 Hz) and 12 ~ 240V DC

DISCOUNT SCHEDULE G

45mm Socket Mount Dual-Function–12 Range Electronic Timing Relays

This c3controls Series ETR Electronic Timing Relay offers dual-functions and a timing range up to 30 hours in a compact, 45mm (1-3/4") Wide x 45mm (1-3/4") High (1/16 DIN) housing that can be panel mounted or mounted in an enclosure door, with an 8 pin socket. This industry standard dimension and socket mounting makes these devices interchangeable with many commonly available electronic timers. This economical, simple dual-function, 12 range timing relay is ideal for applications with the most basic timing requirements. Its multi-voltage supply design (20V ~ 240V AC and 12V ~ 240V DC) reduces inventory. Like all of c3controls other products, this device is UL approved and CE marked, making it suitable for use in global applications. Look and see how the Series ETR Electronic Timing Relays can help you reduce your total installed costs and enhance the performance of your equipment.

Product features include:

- Dual Function, 12 Range
  - ON-Delay and Interval Delay
  - Timing range from 1 second to 30 hours
- Repeat tripping accuracy of 0.5% for precise control application performance.
- Accepts multi-voltage supply input from 20V to 240V AC and 12V to 240V DC, reduces inventory requirements.
- Compact design, only 45mm (1-3/4") wide x 45mm (1-3/4") high (1/16 DIN) – reduces panel space requirements.
- DPDT hard contact for switching AC (5A @ 250V) and DC (5A @ 24V) loads.
- UL Approved, CE Marked, and RoHS compliant.

UNIQUE PRODUCT FEATURES

1. User selectable operating modes and timing ranges with convenient, front accessible setting dials and DIP switches.
2. DIP switches are protected by a cover to prevent the ingress of dust and other contaminants. Cover is transparent so the switch settings can be easily checked.
3. LED indication of Power ON and Relay ON – for fast and easy troubleshooting.
4. Fast and easy installation in an 8 pin socket – reduces installation time and costs. The socket can be mounted on a 35mm DIN Rail or panel, or the timing relay can be installed on an enclosure door. See Section 26 Page 24 for 8 pin sockets.

5. Terminals, connection diagrams, operating modes, and DIP switch settings are clearly marked on the timing relay for easy commissioning, wiring, and troubleshooting – reduces downtime and installation time.

Specifications:

45MM SOCKET MOUNT DUAL-FUNCTION — 12 RANGE ELECTRONIC TIMING RELAYS		
	UNITS	
TIMING PERFORMANCE		
Operating Modes		ON-Delay (Energize Delay) and Interval Delay
Timing Ranges		Seconds: 1 / 3 / 10 / 30 Minutes: 1 / 3 / 10 / 30 Hours: 1 / 3 / 10 / 30
Accuracy		
Setting		± 5% of full scale
Repeat		± 0.5% of full scale or 50 msec. whichever is greater
Reset		On interruption of power
Reset Time		Less than 100 msec.
LED Indication		Power ON and Relay ON
Output Contact		DPDT (2 Changeover)
ELECTRICAL		
Operating Voltage		20 ~ 240V AC (50/60 Hz) and 12 ~ 240V DC
Operating Voltage Limits	%	85 to 110
Power Consumption	VA	2 Max.
Output Rating		5A @ 250V AC, 24V DC Resistive
ENVIRONMENTAL		
Ambient Operating Temperature	°C / °F	-30 to +50 / -22 to +122
Ambient Storage Temperature	°C / °F	-30 to +75 / -22 to +167
Humidity		95% Relative Humidity (Non-condensing)
Altitude	m / ft.	2,000 / 6,528
CONSTRUCTION		
Ingress Protection		
Terminals (Timer Body)		IP20
Exterior Bezel		IP40
Weight	g	100
	oz.	3.5
ROHS COMPLIANCE		For RoHS Compliance documentation by product, refer to www.c3controls.com

Operating Modes:

Function: On Delay

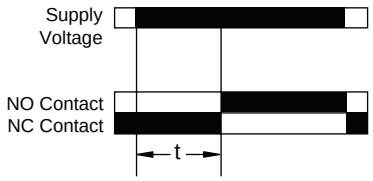

t = set time delay

Function: Interval Delay

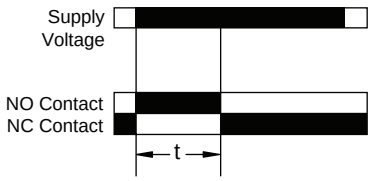

t = set time delay

Terminal Diagram:

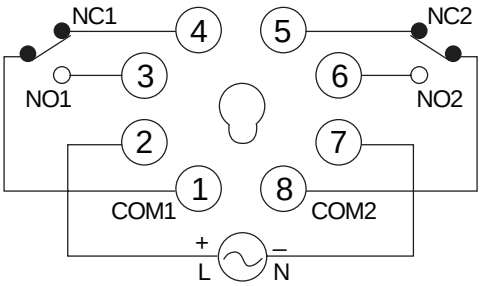

17.5MM ELECTRONIC TIMING RELAYS

MULTI-FUNCTION

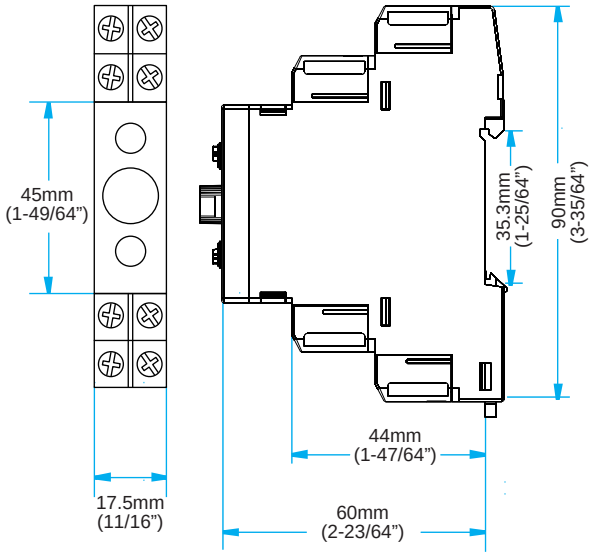

22.5MM ELECTRONIC TIMING RELAYS

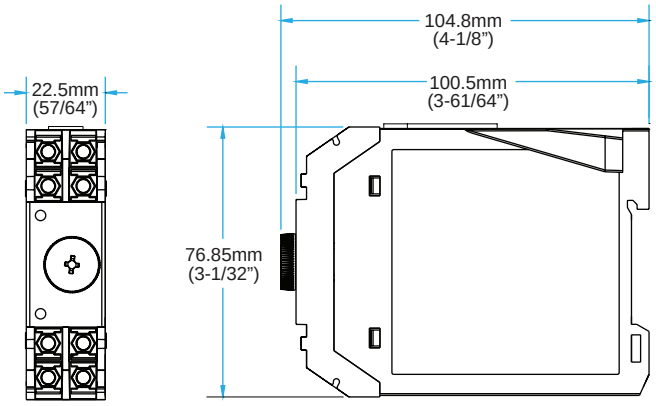

45MM SOCKET MOUNTED ELECTRONIC TIMING RELAYS

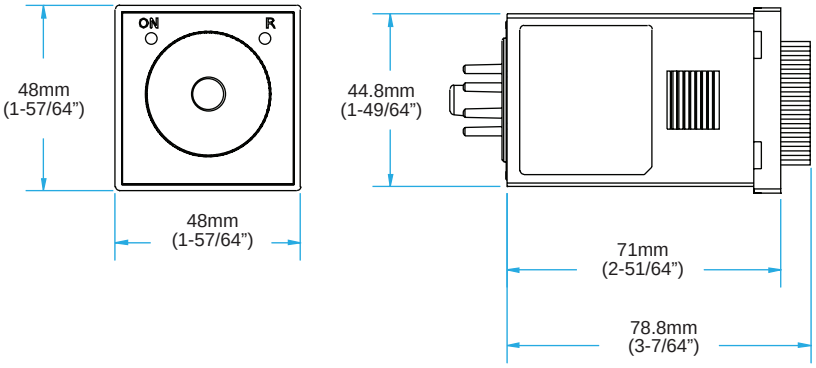

NEW

GENERAL PURPOSE RELAYS

series 200 series 210

c3controls offers a full line of General Purpose Relays ("plug-in" relays), perfect for your control logic applications. Quick and economical to install, our relays allow for easy maintenance and assembly, and come in a variety of base configurations. Options include LED indicators and manual lockable push buttons among others. Our relays meet UL, CSA, and IEC standards requirements making them suitable for global applications.

Section 35

Square Base Relays w/Blade	4
Octal Base Relays w/Pin	10
Pin & Blade Sockets	14
Dimensions	17

PROVEN

Conformity to Standards:

GENERAL PURPOSE RELAYS

UL 508

CSA C22.2 No. 14-18

IEC/EN 61810-1:2008

SOCKETS

UL 508

CSA C22.2 No. 14-18

IEC/EN 61810-1:2008

Certifications:

UL File #: E224085

CE Marked (As per the Low Voltage Directive 2014/35/EU, and RoHS Directive 2015/863/EU)

UL File #: E236196

CE Marked (As per the Low Voltage Directive 2014/35/EU, and RoHS Directive 2015/863/EU)

Visit c3controls.com to download product certifications.

NOTE: The scope (range, description, price, specifications, dimensions, etc.) of the product featured in this section is subject to change without notice. Refer to c3controls.com for product updates.

GENERAL PURPOSE RELAYS

NEW

Every c3controls product is designed and manufactured to meet the needs of the machine builder, including our comprehensive line of General Purpose Relays. Check out all the features of our Series 200 and 210 below!

QUICK AND ECONOMICAL—PERFECT FOR ALL YOUR CONTROL LOGIC APPLICATIONS.	
✓ **Proven**	Our relays meet UL, CSA, and IEC standards requirements making them suitable for global applications.
✓ **Multiple Styles**	Our line of General Purpose Relays are available in Octal Base with pin terminals and Square Base with blade-style terminals.
✓ **Convenient Customization**	Our Series 210 Octal Base relays with pin style terminals are interchangeable with other commonly available relays.
✓ **Easy Reference**	Schematic diagrams and terminal markings are located on the relay for easy reference during installation.
✓ **Transparent Housing**	Allows you to see switching operations and the condition of the contacts.
✓ **Wide Range of Specifications**	Various pole combinations, such as SPDT, DPDT, 3PDT, and 4PDT, are in stock for same-day delivery, featuring a current rating up to 10A. Additionally, SPST, DPST, 3PST, 1 NO + NC contacts, and 1 NO Double break contacts are also offered; however, their availability is contingent on lead time and minimum order quantities.
✓ **Environmentally Safe**	Our AgNi contacts are cadmium-free and environmentally friendly.
✓ **Limited Lifetime Warranty***	Every product is backed by our limited lifetime warranty—unmatched in the industry—bringing you quality components that perform in the most demanding applications.
✓ **Guaranteed Same-Day Shipping***	Product availability reduces inventory and improves cash flow—saving you money. With c3controls any order for standard catalog items received by 6:00 pm ET is guaranteed to ship same-day.
✓ **Advantage Pricing**	Our approach to product development, manufacturing, and focus on servicing the OEM and Electrical Equipment Builder reduces cost. The result—the best value in the industry.

*See c3controls Terms & Conditions

Square Base 1 Pole with Blade Terminals

Square Base 2 Pole with Blade Terminals

Square Base 4 Pole with Blade Terminals

Octal Base 2 Pole with Pin Terminals

Octal Base 3 Pole with Pin Terminals

UNIQUE PRODUCT LINE FEATURES

RELIABILITY REDEFINED

Our General Purpose Relays ensure consistent, trouble-free performance for smooth system operation.

ENHANCED CONTROL AND SAFETY

Opt for our manual push button with an indicator for safe circuit checks without relay energization.

QUICK IDENTIFICATION

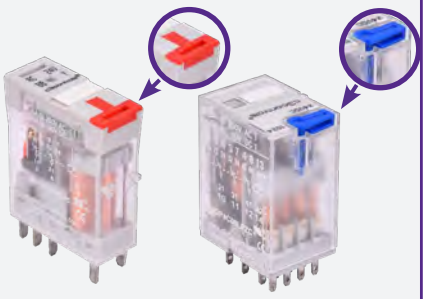

Relay coil voltages are printed for easy identification. Color-coded push buttons distinguish DC (blue) and AC (red) controls for simplified operation.

MARKING STRIPS

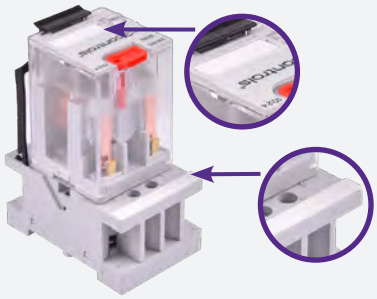

Marking plates at relays and sockets to provide easy identification, improving maintenance efficiency and minimizing errors.

INBUILT RETAINER CLIPS

Built-in plastic retainer clips in relay sockets ensure secure and hassle-free relay installation and replacement.

VERSATILE APPLICATIONS

Our relays seamlessly adapt to industrial, commercial, and residential applications, making them the ideal choice for diverse settings.

FIND IT FAST

General Purpose Relays

- Certifications
- Specifications
- Dimension Drawings
- Installation Instructions
- Easy to Buy

c3controls.com

Square Base 1 Pole Relays with Blade Terminals

- SPDT and SPST relays with a 10A rating provide flexibility for control circuit applications.
- Coil voltages printed on top of relays for easy identification, ensuring the right choice for your application.
- Our color-coded push buttons simplify operation by clearly distinguishing between DC (blue) and AC (red) controls.
- Comprehensive selection of coil voltages, ranging from 12V to 230V AC and 12V to 110V DC.
- Low coil consumption to minimize transformer and power supply requirements.
- Transparent housing designed for visual observation of switching mechanisms and contact points, allowing for real-time assessment of operational and wear status.
- Small size requiring minimum panel space for lower installed cost.
- Schematic diagram and terminal markings on the relay for easy reference during installation.
- Optional manual and lockable push button and LED indicator for checking the control circuit operation without energizing the relay and to easily determine the relay status.
- 100% tested to ensure performance to specification.
- UL, CSA and CE for acceptance in global applications.
- AgNi contacts, environmentally friendly - cadmium-free.

IT'S EASY TO BUILD YOUR OWN RELAY

Simply pick the code number from each of the sections below and combine them to build your part number.

Square Base 1 Pole Relay with Blade Terminals

200-GP _____ **10** _____ _____

I *II* *III* *IV* *V*

Example: To build one of our most popular Relays, the part number would be 200-GP + II + 10 + IV + V or 200-GP1C10C

NEW

I. RELAY TYPE

CODE	DESCRIPTION
200-GP	General Purpose Relay

II. POLES / CONTACT TYPE

CODE	DESCRIPTION	LIST
1X	SPST (1 N.O.)*	$20.00
1C	SPDT (1 C/O)	$11.00

III. CURRENT RATING

CODE	DESCRIPTION
10	10 Amps

IV. OPTIONS

CODE	DESCRIPTION	LIST
(Blank)	No Options	—
LP	LED Indicator, Manual and Lockable Push Button	$ 2.00
LPW	LED Indicator, Manual and Lockable Push Button with Free Wheeling Diode*	$10.00
LPG	LED Indicator, Manual and Lockable Push Button with Free Wheeling Diode and Polarity Diode*	$12.00
LPR	LED Indicator, Manual and Lockable Push Button with RC Circuit*	$16.00
LPH	LED Indicator, Manual and Lockable Push Button with Bridge Rectifier*	$12.00

V. COIL VOLTAGE

CODE	DESCRIPTION	FOR OPTION CODES
B	12V AC*	LP
C	24V AC	LP, LPH
J	48V AC*	LP, LPH
U	115V AC	LP, LPR
V	230V AC	LP, LPR
ZB	12V DC	LP, LPW, LPG
ZC	24V DC	LP, LPW, LPG, LPH
ZJ	48V DC*	LP, LPW, LPG, LPH
ZD	110V DC*	LP, LPW, LPG

*NOTE: Products marked with * are not available for same-day shipping.
Please contact our Customer First Team for lead times and minimum order quantities.

DISCOUNT SCHEDULE G

COMPATIBLE SOCKETS

RELAY TYPE	COMPATIBLE SOCKETS
200-GP1C10**	200-SB0510O with Screw Clamp Terminals (Guarded) or
200-GP1X10**	200-SB0510B* with Box Terminals

NOTE: ** Represents the Options and Coil Voltage codes. Refer to charts IV & V above.
See page 14 for socket information.

SPECIFICATIONS:

		SQUARE BASE 1 POLE RELAYS				
	UNITS	**200-GP1C10** & 200-GP1X10****				
CONTACTS						
Maximum Switching Current	A	10				
Maximum Peak Inrush Current (20ms)	A	30				
Maximum Switching Voltage	V	250				
Maximum AC Load	kVA	2.5				
Resistive Load	PF = 1.0	250 VAC - 10A 30 VDC - 10A				
Inductive Load	PF = 0.4	240 VAC - 3A 240 VAC - 2A				
Motor Load		240 VAC - 1/4 HP 240 VAC - 1/10 HP				
Minimum Recommended Load		10 VDC - 10mA				
INSULATION						
Dielectric Strength (1 minute)						
Open Contacts	kV	1				
Between Contacts and Coil	kV	5				
Insulation Resistance @ 500 VDC	Ω	>3G				
COILS (Ohms ±10% @ 20°C)						
VOLTAGE		**Coil Resistance (+/– 10% OHMS)**	**Power Consumption**	**Pick-Up Voltage**	**Drop-Out Voltage**	**Maximum Allowed Voltage**
12V AC		80	1.1 VA	≤85% of Nominal Voltage	≥ 30% of Nominal Voltage	110% of Rated Voltage
24V AC		290				
48V AC		1,200				
115V AC		7,300				
230V AC		28,800				
12V DC		224	0.7 W	≤75% of Nominal Voltage	≥ 10% of Nominal Voltage	110% of Rated Voltage
24V DC		742				
48V DC		3,500				
110V DC		19,900				
ENVIRONMENTAL						
Operate Time + Bounce Time	ms	10				
Release Time + Bounce Time	ms	8				
Ambient Temperature		-40°C to +70°C (-40°F to +158°F)				
Mechanical Life Operations		10 Million AC, 20 Million DC Relays				
Electrical Life @ Nominal Load	ops	>100,000				
Operating Frequency @ Nominal Load		1,200/hour				
Protection		IP40 / RT1				
Weight	gms	21				
ROHS COMPLIANCE		For RoHS compliance documentation by product, refer to c3controls.com				

Square Base 2 Pole Relays with Blade Terminals

- DPDT and DPST relays with ratings of 6 Amps and 10 Amps provide options for control circuit applications.
- Coil voltages printed on top of relays for easy identification, ensuring the right choice for your application.
- Our color-coded push buttons simplify operation by clearly distinguishing between DC (blue) and AC (red) controls.
- Comprehensive selection of coil voltages, ranging from 6V to 230V AC and 12V to 220V DC.
- Low coil consumption to minimize transformer and power supply requirements.
- Transparent housing designed for visual observation of switching mechanisms and contact points, allowing for real-time assessment of operational and wear status.
- Small size requiring minimum panel space for lower installed cost.
- Schematic diagram and terminal markings on the relay for easy reference during installation.
- Optional manual and lockable push button and LED indicator for checking the control circuit operation without energizing the relay and to easily determine the relay status.
- 100% tested to ensure performance to specification.
- UL, CSA and CE for acceptance in global applications.
- AgNi contacts, environmentally friendly - cadmium-free.

IT'S EASY TO BUILD YOUR OWN RELAY

Simply pick the code number from each of the sections below and combine them to build your part number.

Square Base 2 Pole Relay with Blade Terminals

200-GP ____ ____ ____ ____

I *II* *III* *IV* *V*

NEW

Example: To build one of our most popular Relays, the part number would be 200-GP + II + III + IV + V or 200-GP2C10C

I. RELAY TYPE

CODE	DESCRIPTION
200-GP	General Purpose Relay

II. POLES / CONTACT TYPE

CODE	DESCRIPTION	LIST
2X	DPST (2 N.O.)*	$17.40
2C	DPDT (2 C/O)	$10.00
2XY	DPST (1 N.O. + 1 N.C.)*	$13.90

III. CURRENT RATING

CODE	DESCRIPTION	LIST
10	10 Amps	$ 2.60
06	6 Amps	—

*NOTE: 6 Amp rating not available with 2XY contact or Coil Voltages 110V AC and 220V DC.

IV. OPTIONS

CODE	DESCRIPTION	LIST
(Blank)	No Options	—
LP	LED Indicator, Manual and Lockable Push Button	$ 2.00
LPW	LED Indicator, Manual and Lockable Push Button with Free Wheeling Diode*	$10.00
LPG	LED Indicator, Manual and Lockable Push Button with Free Wheeling Diode and Polarity Diode*	$12.00
LPR	LED Indicator, Manual and Lockable Push Button with RC Circuit*	$16.00
LPH	LED Indicator, Manual and Lockable Push Button with Bridge Rectifier*	$12.00

*NOTE: Products marked with * are not available for same-day shipping. Please contact our Customer First Team for lead times and minimum order quantities.

DISCOUNT SCHEDULE G

V. COIL VOLTAGE

CODE	DESCRIPTION	FOR OPTION CODES
A	6V AC*	LP
B	12V AC*	LP
C	24V AC	LP, LPH
J	48V AC*	LP, LPH
I	110V AC*	LP
U	115V AC	LP, LPR
V	230V AC	LP, LPR
ZB	12V DC*	LP, LPW, LPG
ZC	24V DC	LP, LPW, LPG, LPH
ZJ	48V DC*	LP, LPW, LPG, LPH
ZD	110V DC	LP, LPW, LPG
ZE	220V DC*	LP, LPW, LPG

COMPATIBLE SOCKETS

RELAY TYPE	COMPATIBLE SOCKETS
200-GP2C06**	200-SB0806O with Screw Clamp Terminals (Guarded) or 200-SB0806B* with Box Terminals
200-GP2X06**	
200-GP2C10**	200-SB0810O with Screw Clamp Terminals (Guarded) or 200-SB0810B* with Box Terminals
200-GP2X10**	
200-GP2XY10**	

NOTE: ** Represents the Options and Coil Voltage codes. Refer to charts IV & V above. See page 14 &15 for socket information.

Specifications:

SQUARE BASE 2 POLE RELAYS						
	UNITS	**200-GP2C06** / 200-GP2X06****		**200-GP2C10** / 200-GP2X10****		**200-GP2XY10****
CONTACTS						
Maximum Switching Current	A	6		10		10
Maximum Peak Inrush Current (20 ms)	A	30		30		30
Maximum Switching Voltage	V	250		250		250
Maximum AC Load	kVA	1.5		2.5		2.5
Resistive Load	PF = 1.0	250 VAC - 6A 30 VDC - 6A		250 VAC - 10A 30 VDC - 10A		250 VAC - 10A 30 VDC - 10A
Inductive Load	PF = 0.4	240 VAC - 2A 240 VDC - 2A		240 VAC - 3A 240 VDC - 1.5A		240 VAC - 3A 240 VAC - 1.5A
Motor Load				240 VAC - 1/2 HP		240 VAC -1/2 HP
Minimum Recommended Load		10 VDC - 10mA		10 VDC - 10mA		10 VDC - 10mA
INSULATION						
Dielectric Strength (1 minute)						
Open Contacts	kV	3		2.5		2.5
Between Contacts and Coil	kV	5		2.5		2.5
Insulation Resistance @ 500 VDC	Ω	>3G		>3G		>3G
COILS (Ohms ±10% @ 20°C)		**200-GP2C06** / 200-GP2X06****				
VOLTAGE		**Coil Resistance (+/– 10% OHMS)**	**Power Consumption**	**Pick-Up Voltage**	**Drop-Out Voltage**	**Maximum Allowed Voltage**
12V AC		80	1.1 VA	≤85% of Nominal Voltage	≥ 30% of Nominal Voltage	110% of Rated Voltage
24V AC		290				
48V AC		1,200				
115V AC		7,300				
230V AC		28,800				
12V DC		224	0.7 W	≤75% of Nominal Voltage	≥ 10% of Nominal Voltage	110% of Rated Voltage
24V DC		742				
48V DC		3,500				
110V DC		19,900				
COILS (Ohms ±10% @ 20°C)		**200-GP2C10** / 200-GP2X10** / 200-GP2XY10****				
VOLTAGE		**Coil Resistance (+/– 10% OHMS)**	**Power Consumption**	**Pick-Up Voltage**	**Drop-Out Voltage**	**Maximum Allowed Voltage**
6V AC		12	1.2 VA	≤85% of Nominal Voltage	≥ 30% of Nominal Voltage	110% of Rated Voltage
12V AC		50				
24V AC		190				
48V AC		785				
110 / 115V AC		3,880				
230V AC		17,400				
12V DC		160	1.0 W	≤75% of Nominal Voltage	≤10% of Nominal Voltage	110% of Rated Voltage
24V DC		640				
48V DC		2,600				
110V DC		13,600				
220V DC		54,000				
ENVIRONMENTAL						
Operate Time + Bounce Time	ms	10		10		16
Release Time + Bounce Time	ms	8		8		8
Ambient Temperature		-40°C to +70°C (-40°F to +158°F)		-40°C to +70°C (-40°F to +158°F)		-40°C to +70°C (-40°F to +158°F)
Mechanical Life Operations		10 Million AC, 20 Million DC Relays		10 Million AC, 20 Million DC Relays		10 Million AC, 20 Million DC Relays
Electrical Life @ Nominal Load	ops	>100,000		>100,000		>100,000
Operating Frequency @ Nominal Load		1,200/hour		1,200/hour		1,200/hour
Protection		IP40 / RT1		IP40 / RT1		IP40 / RT1
Weight	gms	21		43		43
ROHS COMPLIANCE		For RoHS compliance documentation by product, refer to c3controls.com				

Square Base 4 Pole Relays with Blade Terminals

- 4PDT relays with a 6-amp rating offer flexibility for control circuit applications.
- Coil voltages printed on top of relays for easy identification, ensuring the right choice for your application.
- Our color-coded push buttons simplify operation by clearly distinguishing between DC (blue) and AC (red) controls.
- Comprehensive selection of coil voltages, ranging from 6V to 230V AC and 12V to 220V DC.
- Low coil consumption to minimize transformer and power supply requirements.
- Transparent housing designed for visual observation of switching mechanisms and contact points, allowing for real-time assessment of operational and wear status.
- Small size requiring minimum panel space for lower installed cost.
- Schematic diagram and terminal markings on the relay for easy reference during installation.
- Optional manual and lockable push button and LED indicator for checking the control circuit operation without energizing the relay and to easily determine the relay status.
- 100% tested to ensure performance to specification.
- UL, CSA and CE for acceptance in global applications.
- AgNi contacts, environmentally friendly - cadmium-free.

IT'S EASY TO BUILD YOUR OWN RELAY

Simply pick the code number from each of the sections below and combine them to build your part number.

Square Base 4 Pole Relay with Blade Terminals

200-GP 4C 06 _____ _____

I II III IV V

NEW

Example: To build one of our most popular Relays, the part number would be 200-GP + 4C + 06 + IV + V or 200-GP4C06LPC

I. RELAY TYPE

CODE	DESCRIPTION
200-GP	General Purpose Relay

II. POLES / CONTACT TYPE

CODE	DESCRIPTION	LIST
4C	4PDT (4 C/O)	$11.20

III. CURRENT RATING

CODE	DESCRIPTION
06	6 Amps

IV. OPTIONS

CODE	DESCRIPTION	LIST
(Blank)	No Options	—
LP	LED Indicator, Manual and Lockable Push Button	$ 2.00
LPW	LED Indicator, Manual and Lockable Push Button with Free Wheeling Diode*	$10.00
LPG	LED Indicator, Manual and Lockable Push Button with Free Wheeling Diode and Polarity Diode*	$12.00
LPR	LED Indicator, Manual and Lockable Push Button with RC Circuit*	$16.00
LPH	LED Indicator, Manual and Lockable Push Button with Bridge Rectifier*	$12.00

*NOTE: Products marked with * are not available for same-day shipping. Please contact our Customer First Team for lead times and minimum order quantities.

DISCOUNT SCHEDULE G

V. COIL VOLTAGE

CODE	DESCRIPTION	FOR OPTION CODES
A	6V AC*	LP
B	12V AC*	LP
C	24V AC	LP, LPH
J	48V AC*	LP, LPH
I	110V AC*	LP
U	115V AC	LP, LPR
V	230V AC	LP, LPR
ZB	12V DC*	LP, LPW, LPG
ZC	24V DC	LP, LPW, LPG, LPH
ZJ	48V DC*	LP, LPW, LPG, LPH
ZD	110V DC	LP, LPW, LPG
ZE	220V DC*	LP, LPW, LPG

COMPATIBLE SOCKETS

RELAY TYPE	COMPATIBLE SOCKETS
200-GP4C06**	200-SB1406O with Screw Clamp Terminals (Guarded) or 200-SB1406B* with Box Terminals

NOTE: ** Represents the Options and Coil Voltage codes. Refer to charts IV & V above. See page 15 for socket information.

SPECIFICATIONS:

SQUARE BASE 4 POLE RELAYS						
	UNITS	**200-GP4C06****				
CONTACTS						
Maximum Switching Current	A	6				
Maximum Peak Inrush Current (20ms)	A	15				
Maximum Switching Voltage	V	250				
Maximum AC Load	kVA	2.5				
Resistive Load	PF = 1.0	250 VAC - 6A 30 VDC - 6A				
Inductive Load	PF = 0.4	120 VAC - 3A 28 VDC - 3A				
Minimum Recommended Load		10 VDC - 10mA				
INSULATION						
Dielectric Strength (1 minute)						
Between Adjacent Poles	kV	2.5				
Between Contacts and Coil	kV	2.5				
Insulation Resistance @ 500 VDC	Ω	3G				
COILS (Ohms ±10% @ 20°C)						
VOLTAGE		**Coil Resistance (+/– 10% OHMS)**	**Power Consumption**	**Pick-Up Voltage**	**Drop-Out Voltage**	**Maximum Allowed Voltage**
6V AC		3.15	1.2 VA	≤85% of Nominal Voltage	≥ 30% of Nominal Voltage	110% of Rated Voltage
12V AC		13.3				
24V AC		52				
48V AC		240				
110 / 115V AC		1,120				
230V AC		5,600				
12V DC		115	1.0 W	≤75% of Nominal Voltage	≥ 10% of Nominal Voltage	110% of Rated Voltage
24V DC		480				
48V DC		1,850				
110V DC		9,000				
220V DC		29,000				
ENVIRONMENTAL						
Operate Time + Bounce Time	ms	10				
Release Time + Bounce Time	ms	6				
Ambient Temperature		-40°C to +70°C (-40°F to +158°F)				
Mechanical Life Operations		10 Million AC, 20 Million DC Relays				
Electrical Life @ Nominal Load	ops	>100,000				
Operating Frequency @ Nominal Load		1,200/hour				
Protection		IP40				
Weight	gms	80				
ROHS COMPLIANCE		For RoHS compliance documentation by product, refer to c3controls.com				

Octal Base 2 Pole Relays with Pin Terminals

- DPDT and DPST relays for control circuit application flexibility.
- Pin terminals allow for universal socket fit and are interchangeable with other commonly available octal base relays.
- Coil voltages printed on top of relays for easy identification, ensuring the right choice for your application.
- Our color-coded push buttons simplify operation by clearly distinguishing between DC (blue) and AC (red) controls.
- Comprehensive selection of coil voltages, ranging from 12V to 230V AC and 6V to 220V DC.
- Low coil consumption to minimize transformer and power supply requirements.
- Transparent housing designed for visual observation of switching mechanisms and contact points, allowing for real-time assessment of operational and wear status.
- Small size requiring minimum panel space for lower installed cost.
- Schematic diagram and terminal markings on the relay for easy reference during installation.
- Optional manual and lockable push button and LED indicator for checking the control circuit operation without energizing the relay and to easily determine the relay status.
- 100% tested to ensure performance to specification.
- UL, CSA and CE for acceptance in global applications.
- AgNi contacts, environmentally friendly - cadmium-free.

IT'S EASY TO BUILD YOUR OWN RELAY

Simply pick the code number from each of the sections below and combine them to build your part number.

Octal Base 2 Pole Relays with Pin Terminals

210-GP _____ **10** _____ _____

I *II* *III* *IV* *V*

Example: To build one of our most popular Relays, the part number would be 210-GP + II + 10 + IV + V or 210-GP2C10LPC

NEW

I. RELAY TYPE

CODE	DESCRIPTION
210-GP	General Purpose Relay

II. POLES / CONTACT TYPE

CODE	DESCRIPTION	LIST
2X	DPST (2 N.O.)*	$24.00
2C	DPDT (2 C/O)	$14.00
2XY	DPST (1 N.O. + 1 N.C.)*	$20.00
2XD	SPST (1 N.O., Double Break)*	$20.00

III. CURRENT RATING

CODE	DESCRIPTION
10	10 Amps

IV. OPTIONS

CODE	DESCRIPTION	LIST
(Blank)	No Options	—
LP	LED Indicator, Manual and Lockable Push Button	$ 2.00
LPG	LED Indicator, Manual and Lockable Push Button with Free Wheeling Diode and Polarity Diode*	$12.00
LPR	LED Indicator, Manual and Lockable Push Button with RC Circuit*	$16.00
LPH	LED Indicator, Manual and Lockable Push Button with Bridge Rectifier*	$12.00

V. COIL VOLTAGE

CODE	DESCRIPTION	FOR OPTION CODES
B	12V AC*	LP
C	24V AC	LP, LPH
J	48V AC*	LP, LPH
I	110V AC	LP
V	230V AC	LP, LPR
ZB	12V DC*	LP, LPG
ZC	24V DC	LP, LPG, LPH
ZJ	48V DC*	LP, LPG, LPH
ZD	110V DC	LP, LPG
ZE	220V DC*	LP, LPG

*NOTE: Products marked with * are not available for same-day shipping. Please contact our Customer First Team for lead times and minimum order quantities.

DISCOUNT SCHEDULE G

COMPATIBLE SOCKETS

RELAY TYPE	COMPATIBLE SOCKETS
210-GP2C10**	210-SP0810B with Box Terminals
210-GP2X10**	
210-GP2XY10**	
210-GP2XD10**	

NOTE: ** Represents the Options and Coil Voltage codes. Refer to charts IV & V above. See page 16 for socket information.

SPECIFICATIONS:

		OCTAL BASE 2 POLE RELAYS				
	UNITS	210-GP2C10**		210-GP2X10**		210-GP2XY10**/ 210-GP2XD10**
CONTACTS						
Maximum Switching Current	A	10				
Maximum Peak Inrush Current (20ms)	A	30				
Maximum Switching Voltage	V	250				
Maximum AC Load	kVA	2.5				
Resistive Load	PF = 1.0	250 VAC - 10A 30 VDC - 10A				
Inductive Load	PF = 0.4	240 VAC - 7A 120 VAC - 10A 28 VDC - 8A				
Motor Load		240 VAC - 1/3 HP 120 VAC - 1/4 HP				
Minimum Recommended Load		10 VDC - 10mA				
INSULATION						
Dielectric Strength (1 minute)						
Between Adjacent Poles	kV	1.5		2		
Between Contacts and Coil	kV	2		2.5		
Insulation Resistance @ 500 VDC	Ω	200M				
COILS (Ohms ±10% @ 20°C)						
VOLTAGE		**Coil Resistance (+/– 10% OHMS)**	**Power Consumption**	**Pick-Up Voltage**	**Drop-Out Voltage**	**Maximum Allowed Voltage**
12V AC		13.3	2.5 VA	≤85% of Nominal Voltage	≥ 30% of Nominal Voltage	110% of Rated Voltage
24V AC		52				
48V AC		240				
110V AC		1,120				
230V AC		5,600				
12V DC		115	0.7 W	≤75% of Nominal Voltage	≥ 10% of Nominal Voltage	110% of Rated Voltage
24V DC		480				
48V DC		1,850				
110V DC		9,000				
220V DC		29,000				
ENVIRONMENTAL						
Operate Time + Bounce Time	ms	8+3/3.5+8		20+3		
Release Time + Bounce Time	ms	9+8/12+16		20+8		
Ambient Temperature		-40°C to +70°C (-40°F to +158°F)				
Mechanical Life Operations		10 Million AC, 20 Million DC Relays				
Electrical Life @ Nominal Load	ops	>100,000				
Operating Frequency @ Nominal Load		1,200/hour				
Protection		IP40				
Weight	gms	80				
ROHS COMPLIANCE		For RoHS compliance documentation by product, refer to c3controls.com				

Octal Base 3 Pole Relays with Pin Terminals

- 3PDT and 3PST relays for control circuit application flexibility.
- Pin terminals allow for universal socket fit and are interchangeable with other commonly available octal base relays.
- Coil voltages printed on top of relays for easy identification, ensuring the right choice for your application.
- Our color-coded push buttons simplify operation by clearly distinguishing between DC (blue) and AC (red) controls.
- Comprehensive selection of coil voltages, ranging from 12V to 230V AC and 6V to 220V DC.
- Low coil consumption to minimize transformer and power supply requirements.
- Transparent housing designed for visual observation of switching mechanisms and contact points, allowing for real-time assessment of operational and wear status.
- Small size requiring minimum panel space for lower installed cost.
- Schematic diagram and terminal markings on the relay for easy reference during installation.
- Optional manual and lockable push button and LED indicator for checking the control circuit operation without energizing the relay and to easily determine the relay status.
- 100% tested to ensure performance to specification.
- UL, CSA and CE for acceptance in global applications.
- AgNi contacts, environmentally friendly - cadmium-free.

IT'S EASY TO BUILD YOUR OWN RELAY

Simply pick the code number from each of the sections below and combine them to build your part number.

Octal Base 3 Pole Relays with Pin Terminals

210-GP _____ **10** _____ _____

I *II* *III* *IV* *V*

Example: To build one of our most popular Relays, the part number would be 210-GP + II + 10 + IV + V or 210-GP3C10C

NEW

I. RELAY TYPE

CODE	DESCRIPTION
210-GP	General Purpose Relay

II. POLES / CONTACT TYPE

CODE	DESCRIPTION	LIST
3X	3PST (3 N.O.)*	$25.00
3C	3PDT (3 C/O)	$15.60

III. CURRENT RATING

CODE	DESCRIPTION
10	10 Amps

IV. OPTIONS

CODE	DESCRIPTION	LIST
(Blank)	No Options	—
LP	LED Indicator, Manual and Lockable Push Button	$ 2.00
LPW	LED Indicator, Manual and Lockable Push Button with Free Wheeling Diode*	$10.00
LPG	LED Indicator, Manual and Lockable Push Button with Free Wheeling Diode and Polarity Diode*	$12.00
LPR	LED Indicator, Manual and Lockable Push Button with RC Circuit*	$16.00
LPH	LED Indicator, Manual and Lockable Push Button with Bridge Rectifier*	$12.00

V. COIL VOLTAGE

CODE	DESCRIPTION	FOR OPTION CODES
B	12V AC*	LP
C	24V AC	LP, LPH
J	48V AC*	LP, LPH
I	110V AC	LP
V	230V AC	LP, LPR
ZB	12V DC*	LP, LPW, LPG
ZC	24V DC	LP, LPW, LPG, LPH
ZJ	48V DC*	LP, LPW, LPG, LPH
ZD	110V DC	LP, LPW, LPG
ZE	220V DC*	LP, LPW, LPG

*NOTE: Products marked with * are not available for same-day shipping. Please contact our Customer First Team for lead times and minimum order quantities.

DISCOUNT SCHEDULE G

COMPATIBLE SOCKETS

RELAY TYPE	COMPATIBLE SOCKETS
210-GP3C10**	210-SP1110B with Box Terminals
210-GP3X10**	

NOTE: ** Represents the Options and Coil Voltage codes. Refer to charts IV & V above. See page 16 for socket information.

SPECIFICATIONS:

OCTAL BASE 3 POLES RELAYS						
	UNITS	210-GP3C10**/ 210-GP3X10**				
CONTACTS						
Maximum Switching Current	A	10				
Maximum Peak Inrush Current (20ms)	A	30				
Maximum Switching Voltage	V	250				
Maximum AC Load	kVA	2.5				
Resistive Load	PF = 1.0	250 VAC - 10A 30 VDC - 10A				
Inductive Load	PF = 0.4	240 VAC - 7A 120 VAC - 10A 28 VDC - 8A				
Motor Load		240 VAC - 1/3 HP 120 VAC - 1/4 HP				
Minimum Recommended Load		10 VDC - 10mA				
INSULATION						
Dielectric Strength (1 minute)						
Between Adjacent Poles	kV	2				
Between Contacts and Coil	kV	2.5				
Insulation Resistance @ 500 VDC	Ω	200M				
COILS (Ohms ±10% @ 20°C)						
VOLTAGE		**Coil Resistance (+/– 10% OHMS)**	**Power Consumption**	**Pick-Up Voltage**	**Drop-Out Voltage**	**Maximum Allowed Voltage**
12V AC		13.3	2.5 VA	≤85% of Nominal voltage	≥ 30% of Nominal voltage	110% of Rated Voltage
24V AC		52				
48V AC		240				
110 / 115V AC		1,120				
230V AC		5,600				
12V DC		115	0.7 W	≤75% of Nominal Voltage	≥ 10% of Nominal Voltage	110% of Rated Voltage
24V DC		480				
48V DC		1,850				
110V DC		9,000				
220V DC		29,000				
ENVIRONMENTAL						
Operate Time + Bounce Time	ms	8+3/3.5+8				
Release Time + Bounce Time	ms	9+8/12+16				
Ambient Temperature		-40°C to +70°C (-40°F to +158°F)				
Mechanical Life Operations		10 Million AC, 20 Million DC Relays				
Electrical Life @ Nominal Load	ops	>100,000				
Operating Frequency @ Nominal Load		1,200/hour				
Protection		IP40				
Weight	gms	80				
ROHS COMPLIANCE		For RoHS compliance documentation by product, refer to c3controls.com				

General Purpose Pin & Blade Relay Sockets

- DIN rail mounting for fast and easy installation.
- IP20 guarded terminals to prevent accidental contact with live parts.
- Combination head (+/-) terminal screws accept straight, phillips, or pozidrive screwdrivers.
- UL, CSA and CE for acceptance in global applications.
- Open style terminals to accept ring tongue terminals.
- Panel mounting for secure installation in high vibration and shock installations.

5 & 8 BLADE OPEN & BOX TYPE SOCKETS

NEW

5 BLADE SOCKETS FOR SQUARE BASE 1 POLE RELAYS, 10A

CODE	DESCRIPTION	LIST
200-SB0510O	5 Blade 10 Amp Screw Clamp Terminals (Guarded)	$ 6.00
200-SB0510B	5 Blade 10 Amp Box Terminal*	$ 6.00

*NOTE: Not available for same-day shipping. Please contact our Customer First Team for lead times and minimum order quantities.

SPECIFICATIONS:		
Nominal Load:		10A /250 V
Insulation:		Di-electric strength, 1 minute
Between Contact and Coil:		5 kV
Between All Terminals and DIN Rail:		5 kV
Between Adjacent Terminals:		3 kV
CONSTRUCTION		
Terminal Capacity		
UL/CSA	AWG	22-14
Solid/Multi-strand	mm^2	1 x 4 ~ 2 x 2.25
Terminal Torque	Nm	1.2
	Lb-in.	10.6
Weight	g	28
	oz	1.0

ROHS COMPLIANCE
For documentation by product, refer to c3controls.com.

FOR USE WITH:
RELAY: 200-GP1C10** & 200-GP1X10**

NOTE: **Represents the Options and Coil Voltage Codes. Refer to page 4 for codes.

8 BLADE SOCKETS FOR SQUARE BASE 2 POLE RELAYS, 6A

CODE	DESCRIPTION	LIST
200-SB0806O	8 Blade 6 Amp Screw Clamp Terminals (Guarded)	$ 6.00
200-SB0806B	8 Blade 6 Amp Box Terminal*	$ 6.00

*NOTE: Not available for same-day shipping. Please contact our Customer First Team for lead times and minimum order quantities

SPECIFICATIONS:		
Nominal Load:		6A @ 250 V
Insulation:		Di-electric strength, 1 minute
Between Contact and Coil:		5 kV
Between All Terminals and DIN Rail:		5 kV
Between Adjacent Terminals:		3 kV
CONSTRUCTION		
Terminal Capacity		
UL/CSA	AWG	22-14
Solid/Multi-strand	mm^2	1 x 4 ~ 2 x 2.25
Terminal Torque	Nm	1.2
	Lb-in.	10.6
Weight	g	38
	oz	1.3

ROHS COMPLIANCE
For documentation by product, refer to c3controls.com.

FOR USE WITH:
RELAY: 200-GP2C06** & 200-GP2X06**

NOTE: **Represents the Options and Coil Voltage Codes. Refer to page 6 for codes.

DISCOUNT SCHEDULE G

8 & 14 BLADE OPEN & BOX TYPE SOCKETS

NEW

8 BLADE SOCKETS FOR SQUARE BASE 2 POLE RELAYS, 10A

CODE	DESCRIPTION	LIST
200-SB0810O	8 Blade 10 Amp Screw Clamp Terminals (Guarded)	$ 6.00
200-SB0810B	8 Blade 10 Amp Box Terminal*	$ 6.00

*NOTE: Not available for same-day shipping. Please contact our Customer First Team for lead times and minimum order quantities

SPECIFICATIONS:		
Nominal Load:		12A @ 250 V
Insulation:		Di-electric strength, 1 minute
Between Contact and Coil:		2.5 kV
Between All Terminals and DIN Rail:		2.5 kV
Between Adjacent Terminals:		2.5 kV
CONSTRUCTION		
Terminal Capacity		
UL/CSA	AWG	22-14
Solid/Multi-strand	mm^2	1 x 4 ~ 2 x 2.25
Terminal Torque	Nm	1.2
	Lb-in.	10.6
Weight	g	61
	oz	2.2

ROHS COMPLIANCE

For documentation by product, refer to c3controls.com.

FOR USE WITH:

RELAY: 200-GP2X10**, 200-GP2C10** & 200-GP2XY10**

NOTE: **Represents the Options and Coil Voltage Codes. Refer to page 6 for codes.

14 BLADE SOCKETS FOR SQUARE BASE 4 POLE RELAYS, 6A

CODE	DESCRIPTION	LIST
200-SB1406O	14 Blade 6 Amp Screw Clamp Terminals (Guarded)	$ 9.00
200-SB1406B	14 Blade 6 Amp Box Terminal*	$ 9.00

*NOTE: Not available for same-day shipping. Please contact our Customer First Team for lead times and minimum order quantities

SPECIFICATIONS:		
Nominal Load:		7A @ 250 V
Insulation:		Di-electric strength, 1 minute
Between Contact and Coil:		2.5 kV
Between All Terminals and DIN Rail:		2.5 kV
Between Adjacent Terminals:		2.5 kV
CONSTRUCTION		
Terminal Capacity		
UL/CSA	AWG	22-14
Solid/Multi-strand	mm^2	1 x 4 ~ 2 x 2.25
Terminal Torque	Nm	1.2
	Lb-in.	10.6
Weight	g	54
	oz	1.9

ROHS COMPLIANCE

For documentation by product, refer to c3controls.com.

FOR USE WITH:

RELAY: 200-GP4C06**

NOTE: **Represents the Options and Coil Voltage Codes. Refer to page 8 for codes.

DISCOUNT SCHEDULE G

8 & 11 PIN BOX TYPE SOCKETS

NEW

8 PIN SOCKET FOR OCTAL BASE 2 POLE RELAYS, 10A

CODE	DESCRIPTION	LIST
210-SP0810B	8 Pin 10 Amp Box Terminal	$ 6.00

SPECIFICATIONS:		
Nominal Load:		10A @ 250 V
Insulation:		Di-electric strength, 1 minute
Between Contact and Coil:		2.5 kV
Between All Terminals and DIN Rail:		2.5 kV
Between Adjacent Terminals:		2.5 kV
CONSTRUCTION		
Terminal Capacity		
UL/CSA	AWG	22-14
Solid/Multi-strand	mm^2	1 x 4 ~ 2 x 2.25
Terminal Torque	Nm	0.5
	Lb-in.	4.4
Weight	g	47
	oz	1.7

ROHS COMPLIANCE

For documentation by product, refer to c3controls.com.

FOR USE WITH:

RELAY: 210-GP2X10**, 210-GP2C10**, 210-GP2XY10** & 210-GP2XD10**

NOTE: **Represents the Options and Coil Voltage Codes. Refer to page 10 for codes.

11 PIN SOCKET FOR OCTAL BASE 3 POLE RELAYS, 10A

CODE	DESCRIPTION	LIST
210-SP1110B	11 Pin 10 Amp Box Terminal	$ 6.00

SPECIFICATIONS:		
Nominal Load:		10A @ 250 V
Insulation:		Di-electric strength, 1 minute
Between Contact and Coil:		2.5 kV
Between All Terminals and DIN Rail:		2.5 kV
Between Adjacent Terminals:		2.5 kV
CONSTRUCTION		
Terminal Capacity		
UL/CSA	AWG	22-14
Solid/Multi-strand	mm^2	1 x 4 ~ 2 x 2.25
Terminal Torque	Nm	0.5
	Lb-in.	4.4
Weight	g	47
	oz	1.7

ROHS COMPLIANCE

For documentation by product, refer to c3controls.com.

FOR USE WITH:

RELAY: 210-GP3X10** & 210-GP3C10**

NOTE: **Represents the Options and Coil Voltage Codes. Refer to page 12 for codes.

DISCOUNT SCHEDULE G

SQUARE BASE W/BLADE TERMINALS - 1 POLE (200-GP1C10** & 200-GP1X10**)

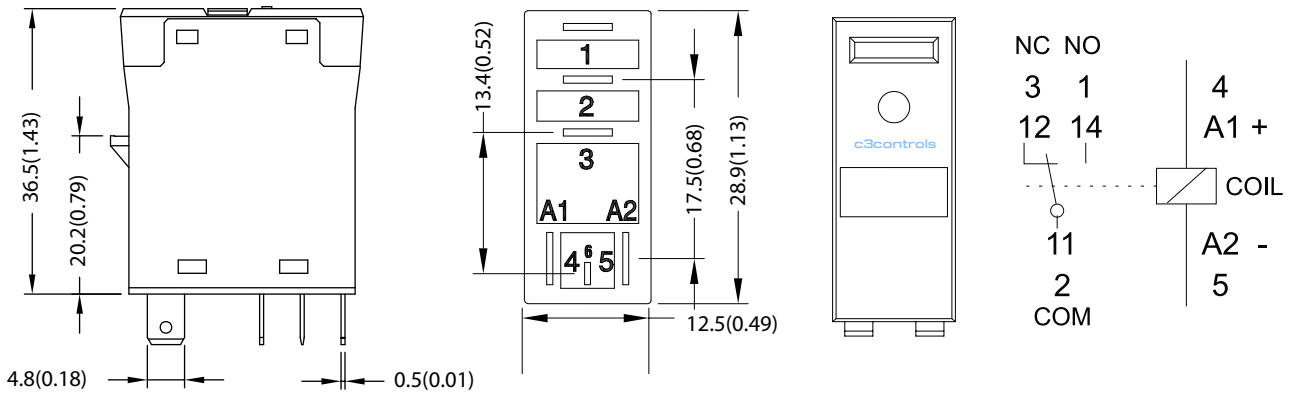

SPST / SPDT

SQUARE BASE W/BLADE TERMINALS - 2 POLES (200-GP2C06** & 200-GP2X06**)

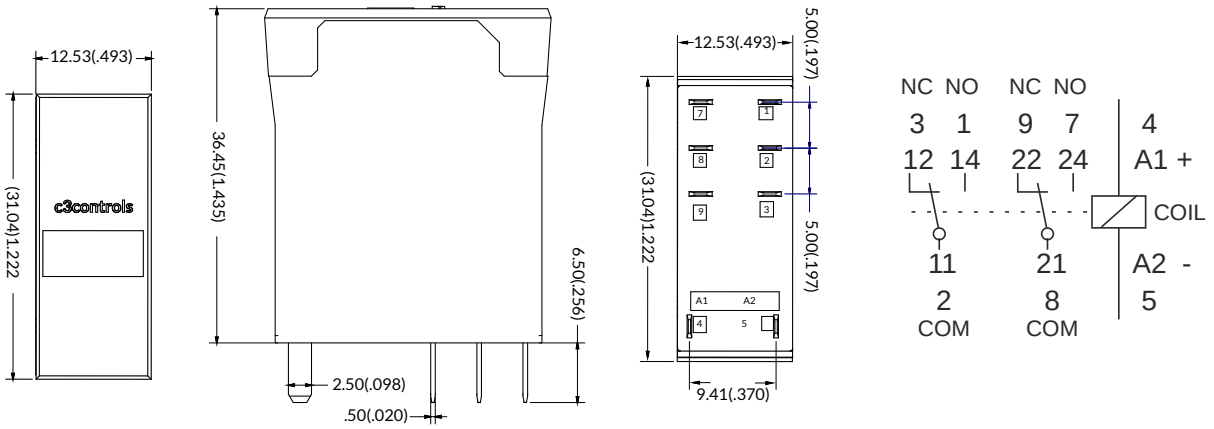

DPST / DPDT

SQUARE BASE W/BLADE TERMINALS - 2 POLES (200-GP2C10**, 200-GP2X10** & 200-GP2XY10**)

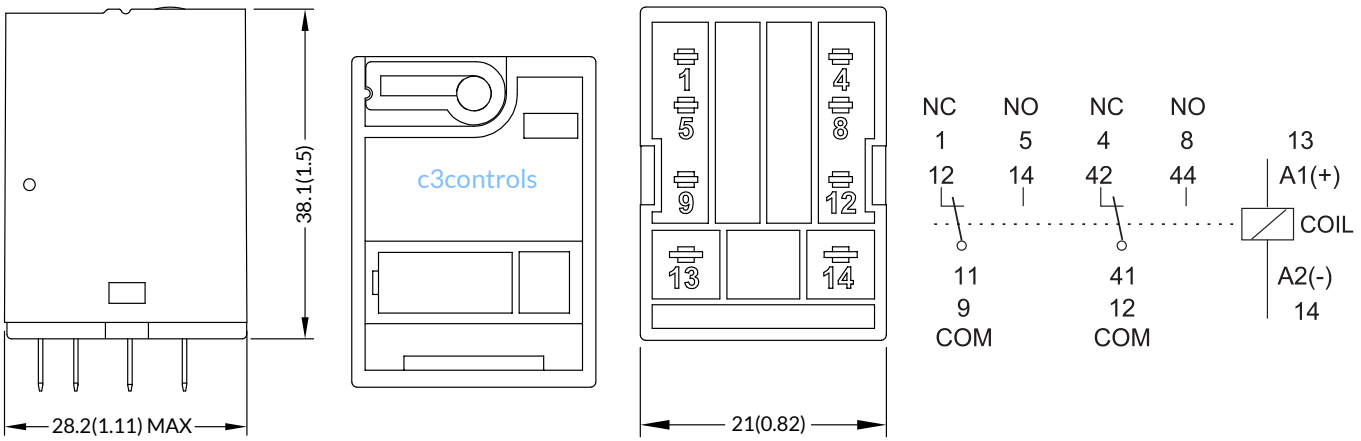

DPST / DPDT

SQUARE BASE W/BLADE TERMINALS - 4 POLES (200-GP4C06**)

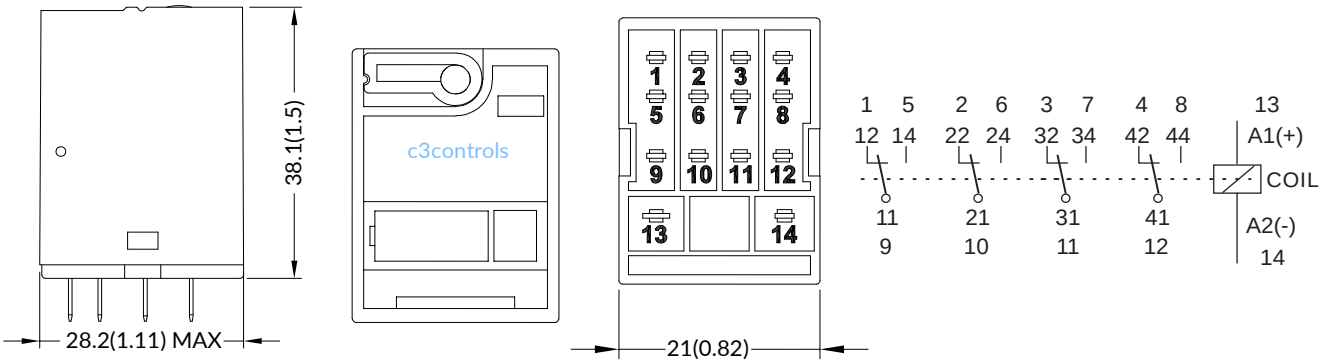

4PDT

OCTAL BASE W/PIN TERMINALS - 2 POLES (210-GP2C10**, 210-GP2X10**, 210-GP2XY10** & 210-GP2XD10**)

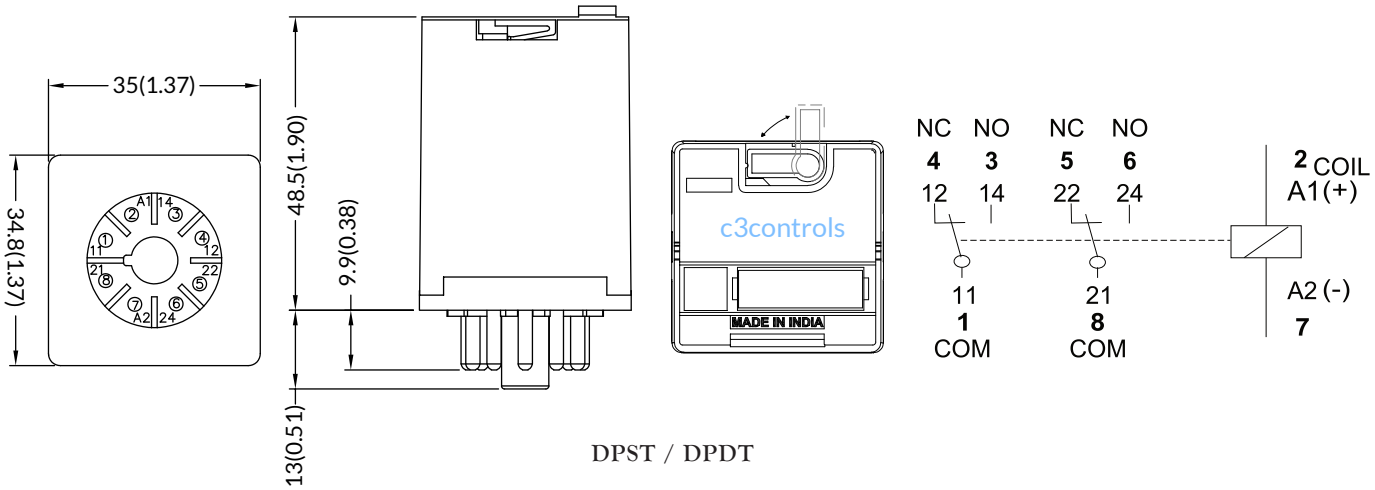

DPST / DPDT

OCTAL BASE W/PIN TERMINALS - 3 POLES (210-GP3C10** & 210-GP3X10**)

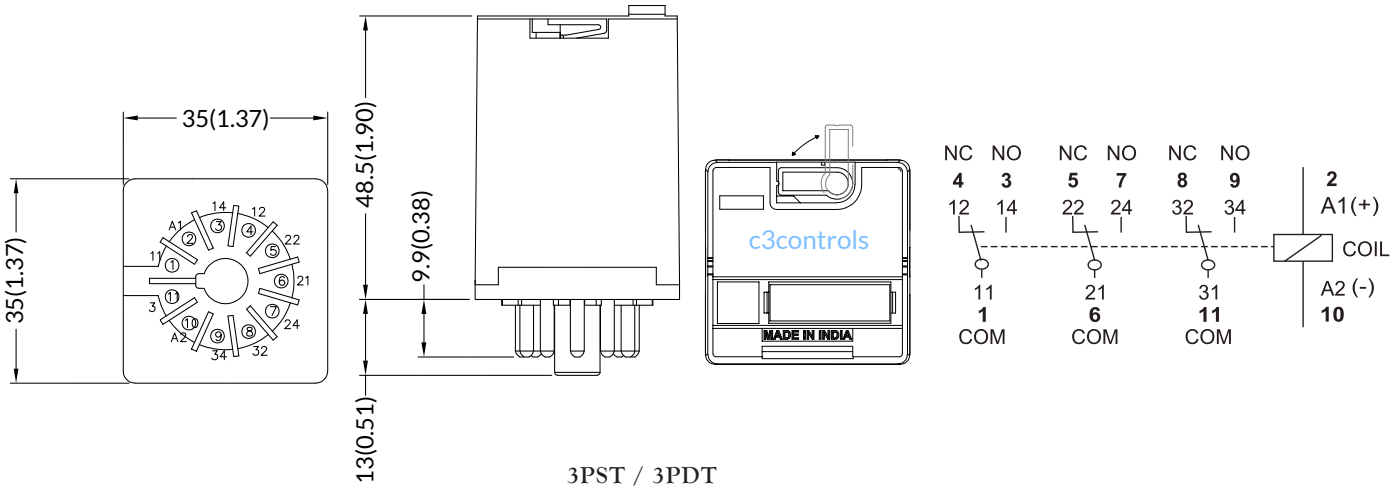

3PST / 3PDT

5 BLADE SOCKETS FOR SQUARE BASE RELAYS, 10A (200-SB05100 & 200-SB0510B)

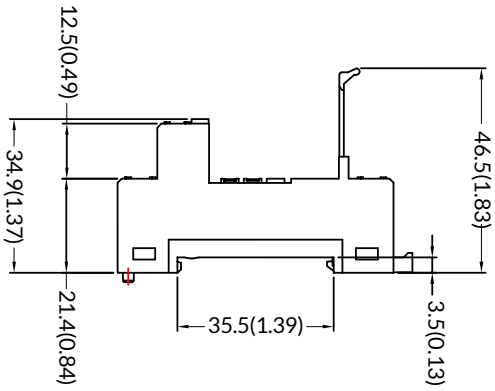

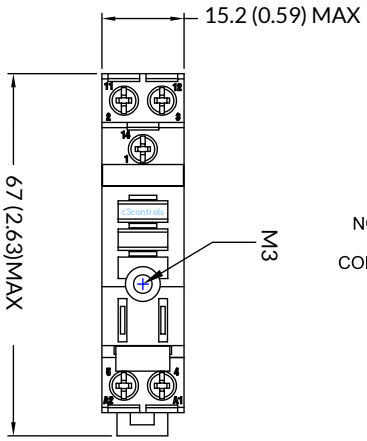

WIRING DIAGRAM

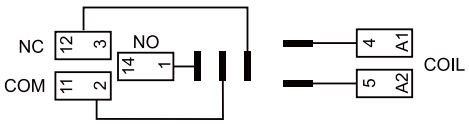

8 BLADE SOCKETS FOR SQUARE BASE RELAYS, 6A (200-SB08060 & 200-SB0806B)

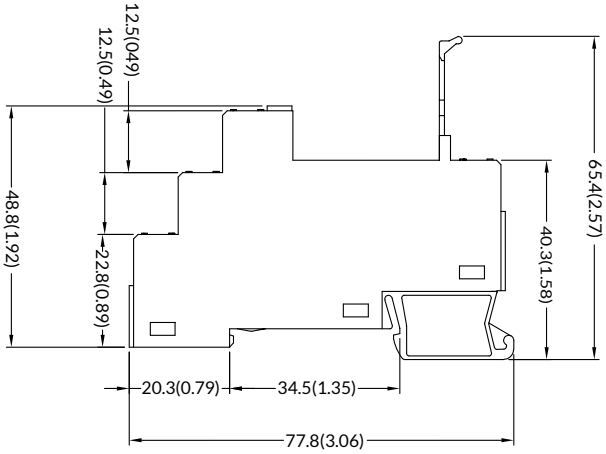

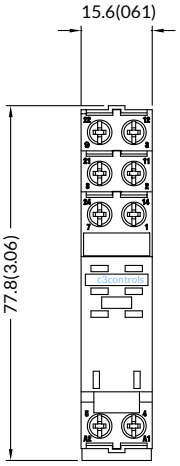

WIRING DIAGRAM

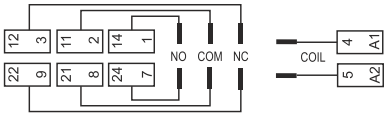

8 BLADE SOCKETS FOR SQUARE BASE RELAYS, 10A (200-SB08100 & 200-SB0810B)

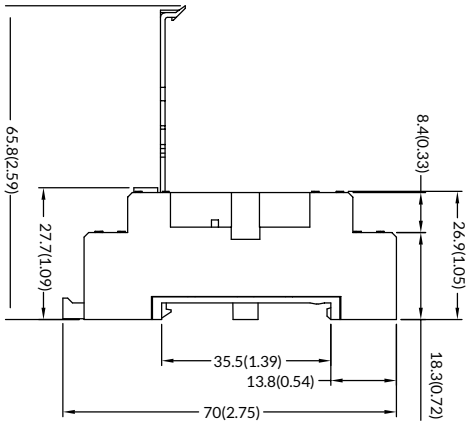

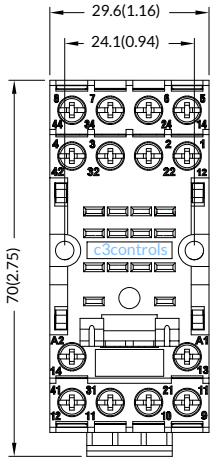

WIRING DIAGRAM

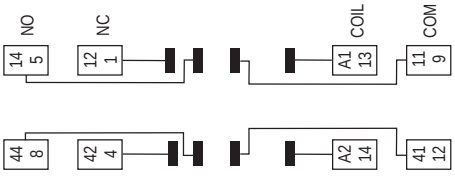

14 BLADE SOCKETS FOR SQUARE BASE RELAYS, 6A (200-SB1406O & 200-SB1406B)

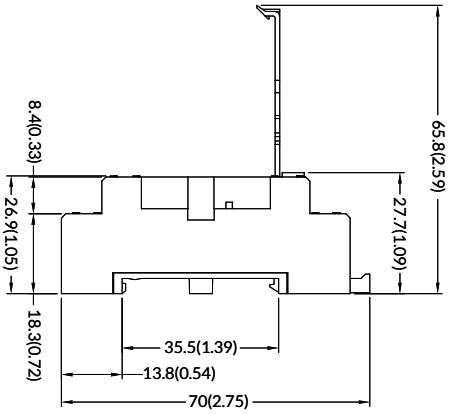

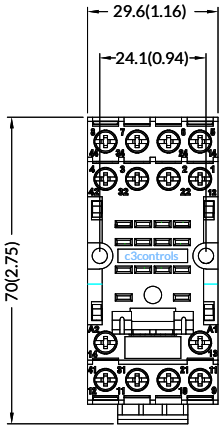

WIRING DIAGRAM

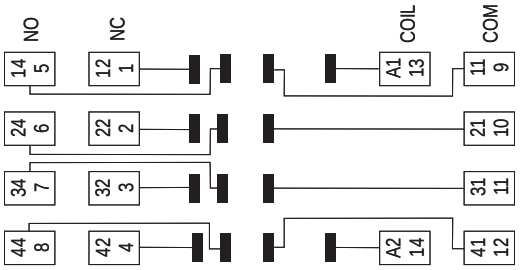

8 PIN SOCKET FOR OCTAL BASE RELAYS, 10A (210-SP0810B)

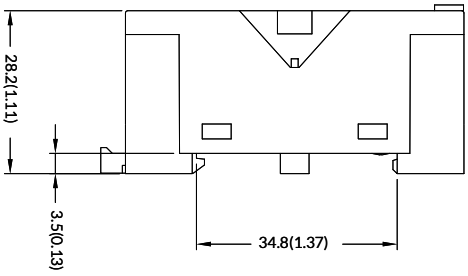

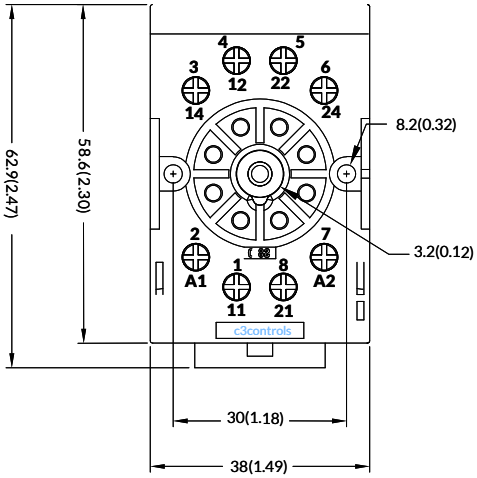

WIRING DIAGRAM

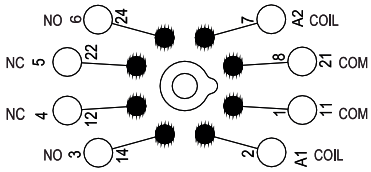

11 PIN SOCKET FOR OCTAL BASE RELAYS, 10A (210-SP1110B)

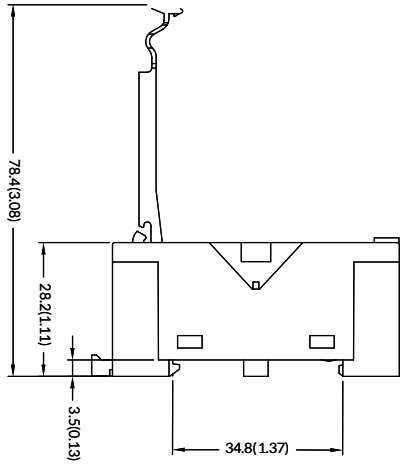

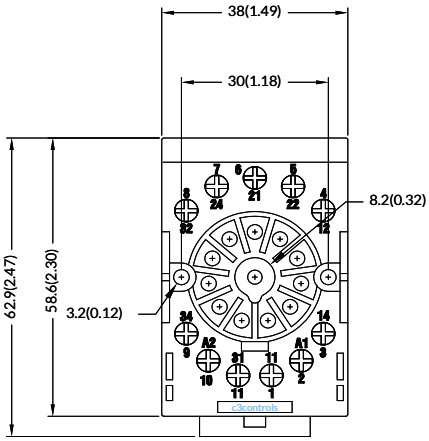

WIRING DIAGRAM

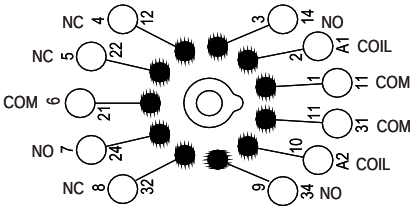

TERMINAL BLOCK RELAYS

series TBR

c3controls Terminal Block Relays are designed to meet your control and automation system requirements, which need reliable, safe connections as well as isolation between electronic controls and process I/O. Due to their unmatched size, flexibility, and various other features, terminal block relays can help you save money and premium panel space. Just look and see what Series TBR has to offer!

Section 27

Terminal Block Relays	4
Replacement Relays	6
Accessories	7
Specifications	8
Wiring Diagrams & Dimensions	9

PROVEN

Conformity to Standards:
Socket
UL 508
CSA 22.2 No. 14
IEC 60947-1, 60947-5-1

Visit c3controls.com to download product certifications.

Certifications:

UL File #: E236196 (Guide SWIV2, SWIV8)

CE Marked (per EU Low Voltage Directive 2014/35/EU and RoHS Directive EU 2015/863)

NOTE: The scope (range, description, price, specifications, dimensions, etc.) of the product featured in this section is subject to change without notice. Refer to c3controls.com for product updates.

TERMINAL BLOCK RELAYS

c3controls line of Terminal Block Relays were designed and manufactured to meet the needs of the machine builder. We promise durable products at a price that gives you an edge. Check out all the features of our Series TBR Terminal Block Relays below!

DELIVERING SUPERIOR PRODUCT QUALITY AND MANUFACTURING EXCELLENCE	
✓ **Proven**	Our Terminal Block Relays are UL Recognized and CE marked, meeting global standards requirements.
✓ **Ultra Compact Size**	Only 6.2mm width for a Single-Pole, Double-Throw relay, allowing you to control more devices and use less space.
✓ **Flexibility**	Pluggable relay attached on the socket can be replaced in case of malfunction, providing flexibility for repair or maintenance work.
✓ **Secure Installation**	Quick and simple snap-on installation on a 35mm DIN Rail.
✓ **Clear Visibility**	LED indication allows you to see the contact status of the relay, making it very helpful in troubleshooting.
✓ **Visible Certifications**	Our product certifications and electrical ratings are clearly marked on the side of the device for easy reference during installation.
✓ **Added Safety**	Terminals are IP20 rated, guarding against accidental contact with live parts. The pluggable relay is also IP67 rated making it reliable in extreme conditions.
✓ **36-Month Warranty***	Every product is backed by our 36-Month Warranty—giving you confidence in the quality, reliability, and performance of components designed for the most demanding applications.
✓ **Guaranteed Same-Day Shipping***	Product availability reduces inventory, and improves cash-flow—saving you money. With c3controls any order for standard catalog items received by 6:00pm ET is guaranteed to ship same-day.
✓ **Advantage Pricing**	Our approach to product development, manufacturing, and focus on servicing the OEM and Electrical Equipment Builder reduces cost. The result—the best value in the industry.

*See c3controls Terms & Conditions

UNIQUE PRODUCT LINE FEATURES

SUPER BRIGHT LED

Highly visible LED on each unit gives indication of the relay's operating state.

PLUGGABLE RELAY

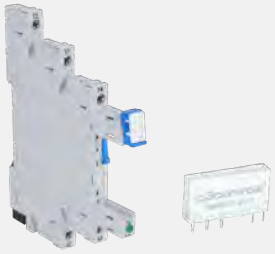

The marker base functions as a lever for installing or replacing the relay in case of troubleshooting or malfunction.

ADDED RELIABILITY & SAFETY

IP20 rated captive screw terminals provide reliability, ease of wiring, and much needed protection against accidental contact with live parts.

EASY REFERENCE

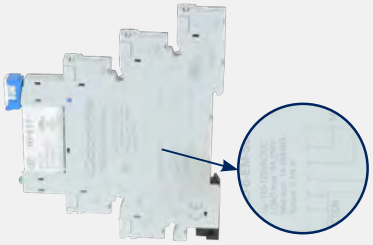

All necessary installation markings including wire size and torque are available on the side of each terminal block relay.

QUICK IDENTIFICATION

Marking system allows for fast and easy circuit identification. A marking strip is pre-supplied on each unit.

ACCESSORIES

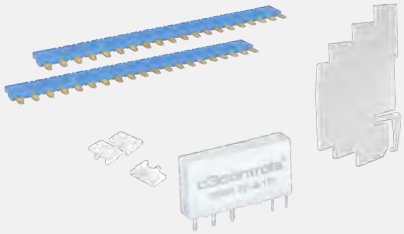

Apart from the replacement relay, marker and separator, Series TBR consists of a jumper accessory to eliminate labor intensive wiring work.

FIND IT FAST

Terminal Block Relays

- Certifications
- Specifications
- Dimension Drawings
- Installation Instructions
- Easy To Buy

c3controls.com

IT'S EASY TO BUILD YOUR OWN TERMINAL BLOCK RELAY

Simply pick the code number from each of the sections below and combine them to build your part number.

Terminal Block Relays

TBR – _____ – 6 – 1P – SC

I II III IV V

Example: To build one of our most popular Terminal Block Relays, the part number would be **TBR + II + 6 + 1P + SC** or **TBR-MC-6-1P-SC**

I. PRODUCT TYPE

CODE	DESCRIPTION
TBR	Terminal Block Relay

II. COIL VOLTAGE

CODE	DESCRIPTION	LIST
MB	12V AC/DC	$21.10
MC	24V AC/DC	$21.10
MD	110-125V AC/DC	$21.10
MF	220-240V AC/DC	$25.30

III. RATED CURRENT

CODE	DESCRIPTION
6	6 Amp

IV. CONTACT TYPE

CODE	DESCRIPTION
1P	Single Pole Double Throw

V. CONNECTION TYPE

CODE	DESCRIPTION
SC	Screw Terminal

DISCOUNT SCHEDULE E

TERMINAL BLOCK RELAY ASSEMBLIES*

TERMINAL BLOCK RELAY ASSEMBLY PART NUMBER	SOCKET PART NUMBER	RELAY PART NUMBER
TBR-MB-6-1P-SC	TBRS-MC-6-EM-SC	TBRR-ZB-6-1P
TBR-MC-6-1P-SC	TBRS-MC-6-EM-SC	TBRR-ZC-6-1P
TBR-MD-6-1P-SC	TBRS-MD-6-EM-SC	TBRR-ZF-6-1P
TBR-MF-6-1P-SC	TBRS-MF-6-EM-SC	TBRR-ZF-6-1P

*Note: Each Terminal Block Relay is an assembly of a socket and a pluggable relay. This table provides the part numbers for the socket and relay for each assembly.

Some of Our Popular Configurations:

TERMINAL BLOCK RELAYS

CATALOG NUMBER	DESCRIPTION	LIST
TBR-MC-6-1P-SC	Terminal Block Relay, Electromechanical, 6A, SPDT, Screw Terminal, 24V AC/DC	$21.10
TBR-MD-6-1P-SC	Terminal Block Relay, Electromechanical, 6A, SPDT, Screw Terminal, 110-125V AC/DC	$21.10
TBR-MF-6-1P-SC	Terminal Block Relay, Electromechanical, 6A, SPDT, Screw Terminal, 220-240V AC/DC	$25.30

Terminal Block Relays

c3controls Series TBR Terminal Block Relays are designed to meet your control and automation system requirements for a reliable, safe connection as well as isolation between electronic controls and process I/O. Due to their unmatched size, flexibility and various other features, terminal block relays can help you save money and a premium panel space. cRUus and CE Markings make them suitable for use anywhere in the world. Just look and see what the Series TBR has to offer.

Product features include:

- Compact size – Just 6.2mm wide for a Single-Pole, Double-Throw relay rated for a 6A load.
- Standard range of AC and DC operating coils for control circuit applications: 12V, 24V, 110-125V, 220-240V
- LED indication of energized relay for fast and easy troubleshooting.
- Coil surge protection for securing internal circuitry against sudden shut-downs.
- Built-in leakage current suppression circuit to avoid nuisance coil turn-on.
- The marker base functions as a lever for installing or replacing the relay in case of troubleshooting or malfunction.
- Quick and simple installation on a 35mm DIN Rail.
- IP20 rated captive screw terminals provide reliability, ease of wiring, and much needed protection against accidental contact with live parts.
- Highly visible markings for ease of installation, troubleshooting, and maintenance.
- Pre-supplied marking strip on each unit for easy circuit identification.
- Environmentally friendly non-metallic materials are asbestos, halogen, and cadmium free.

IT'S EASY TO BUILD YOUR OWN REPLACEMENT RELAY

Simply pick the code number from each of the sections below and combine them to build your part number.

Replacement Relays

TBRR – _____ – 6 – 1P

I *II* *III* *IV*

Example: To build one of our most popular Replacement Relays, the part number would be **TBRR + II + 6 + 1P** or **TBRR-ZF-6-1P**

I. PRODUCT TYPE

CODE	DESCRIPTION
TBRR	Terminal Block Replacement Relay

II. COIL VOLTAGE

CODE	DESCRIPTION	LIST
ZB	12V	$10.80
ZC	24V	$10.35
ZF	110 - 240V	$13.15

III. RATED CURRENT

CODE	DESCRIPTION
6	6 Amp

IV. CONTACT TYPE

CODE	DESCRIPTION
1P	Single Pole Double Throw

DISCOUNT SCHEDULE E

20 WAY JUMPER LINK

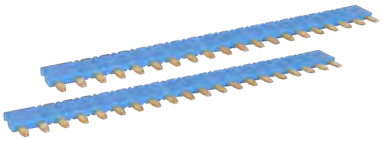

Wire up to 20 relays in no time! The jumper accessory plugs directly into the socket terminals, eliminating labor intensive wiring tasks.

CODE	DESCRIPTION	PCS./PKG.	LIST/PC.
TBR-J-20	20 Way Jumper Link	4	$ 8.90

REPLACEMENT MARKERS

Replacement markers are available if the pre-supplied marker is misplaced or no longer useful.

CODE	DESCRIPTION	LIST
TBR-M6	Replacement Markers (plate of 64 markers)	$ 5.75

SPACER

Spacers offer a quick and easy way to differentiate between circuits in a control panel. Spacer dimensions match exactly with the geometry of a complete relay and socket assembly.

CODE	DESCRIPTION	PCS./PKG.	LIST/PC.
TBR-S	2mm Wide Spacer	5	$ 2.20

DISCOUNT SCHEDULE E

Specifications:

TERMINAL BLOCK RELAY SPECIFICATIONS					
INPUT DATA					
	UNITS				
Rated Voltage	VAC/VDC	12	24	110~125	220~240
Typical Response Time	ms	≤8			
Typical Release Time	ms	≤4			
Pickup Voltage	%	90			
Dropout Voltage	%	10			
Maximum Allowable Voltage	VAC/VDC	14	28	132	264
Coil Consumption	W	0.17		0.21	
CONTACT RATINGS					
Contact Configuration		SPDT			
Contact Material		AgNi			
Rated Load		6A, 250VAC / 30VDC			
Maximum Switching Voltage	VAC/VDC	400/125			
Maximum Switching Power	VA/W	1500/180			
Minimum Switching Voltage	V	5			
Minimum Switching Current	mA	100			
GENERAL					
Mechanical Service Life		1×10^7 cycles			
ELECTRICAL LIFE					
NO Operations		3×10^4 cycles			
NC Operations		1×10^4 cycles			
DIELECTRIC STRENGTH					
Between Contact and Coil	VAC	4,000 for 1 minute			
Between Pole	VAC	1,000 for 1 minute			
Vibration Resistance		10 to 55Hz, double amplitude 1.0 mm			
SHOCK RESISTANCE					
Functional	m/s^2	49			
Destructive	m/s^2	980			
Ambient Temperature Range	°C/°F	-40 to 55 / -40 to 131			
Storage Temperature	°C/°F	-40 to 85 / -40 to 185			
Operating Humidity	%	5 to 85 (no condensation)			
Altitude	m	0 - 2,000			
Pollution Degree		2			
Maximum Wire Size	AWG	14			
Torque	Nm	0.5			
Degree of Protection		IP20			
ROHS COMPLIANCE		For RoHS compliance documentation by product, refer to c3controls.com			

WIRING DIAGRAM

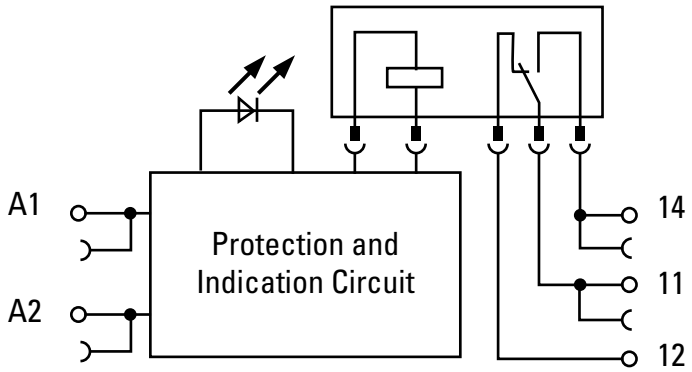

DIMENSIONS

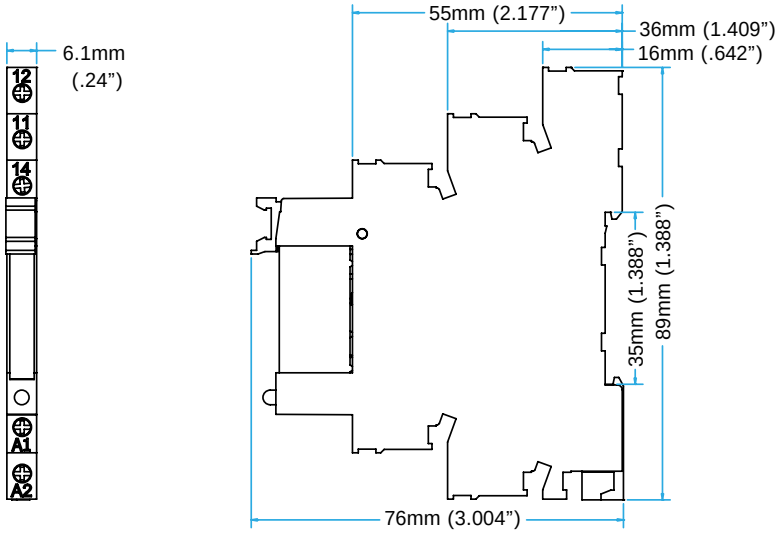

INDUSTRIAL POWER SUPPLIES

c3controls' Industrial Power Supplies are the clear choice when it comes to providing a regulated power for not only industrial and commercial loads but also residential applications. Designed to fit in panels of almost all sizes, c3 power supplies range from 60 to 480W, and of course, with all the necessary certifications and compliances. Check out all the innovative features these power supplies have to offer!

Section 31

Industrial Power Supplies	4
Specifications	5
Compliances and Derating Curves	9
Dimensions	10

PROVEN

Conformity to Standards:
UL 508
CSA C22.2 NO. 107.1-01
IEC 62368-1

Certifications:
UL File #: E336563

CE Marked (per EU Low Voltage Directive 2014/35/EC and RoHS Directive 2011/65/EU)

Visit c3controls.com to download product certifications.

NOTE: The scope (range, description, price, specifications, dimensions, etc.) of the product featured in this section is subject to change without notice. Refer to c3controls.com for product updates.

NEW

INDUSTRIAL POWER SUPPLIES

c3controls offers a range of Industrial Power Supplies designed and manufactured to meet the needs of the machine builder. We promise durable products at a price that gives you an edge, and we guarantee same-day shipping. Check out all the features these power supplies have to offer!

DELIVERING THE MOST RELIABLE, UNINTERRUPTED & HIGH QUALITY POWER

✓ **Proven**	Our Series IPS Industrial Power Supplies are UL Listed and CE marked to meet global standards requirements and are compliant to the RoHS directives.
✓ **Secure Installation**	Quick and simple snap-on installation on a 35mm DIN Rail.
✓ **Clear Visibility**	LED indication allows you to see the availability of the DC power output, making it very helpful in troubleshooting.
✓ **Environmentally Secure**	Designed and tested for ensuring operation in extreme temperatures, to keep your application running.
✓ **Visible Certifications**	Product certifications and electrical ratings are clearly marked on the outside of the device for easy reference during installation.
✓ **36-Month Warranty***	Every product is backed by our 36-Month Warranty—giving you confidence in the quality, reliability, and performance of components designed for the most demanding applications.
✓ **Guaranteed Same-Day Shipping***	Product availability reduces inventory, and improves cash-flow— saving you money. With c3controls any order for standard catalog items received by 6:00pm ET is guaranteed to ship same-day.
✓ **Advantage Pricing**	Our approach to product development, manufacturing, and focus on servicing the OEM and Electrical Equipment Builder reduces cost. The result—the best value in the industry.

*See c3controls Terms & Conditions

IPS1-60-24

IPS1-120-24

IPS1-240-24

IPS1-480-24

UNIQUE PRODUCT LINE FEATURES

BEST IN CLASS EFFICIENCY

c3controls' Industrial Power Supplies are designed to deliver the power with up to 93% efficiency.

RELIABILITY

Unmatched protection against short circuit, overload, overvoltage and over temperature, along with Auto-recovery functionality.

FLEXIBILITY

Adjustable output voltage from 100 to 116%.

EASY MONITORING

Power supplies from 240W to 480W come with DC OK Relay Contacts to provide status signals to the monitoring system.

COMPACT

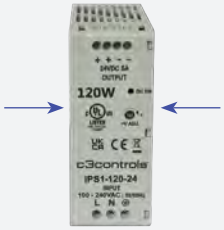

Ultra-compact design to save valuable panel space.

FIND IT FAST

Industrial Power Supplies

- Certifications
- Specifications
- Dimension Drawings
- Installation Instructions
- Easy to Buy

c3controls.com

IT'S EASY TO BUILD YOUR OWN INDUSTRIAL POWER SUPPLY

Simply pick the code number from each of the sections below and combine them to build your part number.

Industrial Power Supplies

IPS1 – _____ – _____
I *II* *III*

Example: To build one of our most popular Industrial Power Supplies, the part number would be **IPS1 + II + III** or **IPS1-60-12**

NEW

I. PRODUCT TYPE

CODE	DESCRIPTION
IPS1	Industrial Power Supply

II. OUTPUT POWER

CODE	DESCRIPTION	LIST
60	60W	$ 73.60
120	120W	$ 89.10
240	240W	$235.00
480	480W	$361.00

III. OUTPUT VOLTAGE

CODE	DESCRIPTION
12	12V*
24	24V
48	48V

*Note: Only available with 60W, 120W and 240W variant.

DISCOUNT SCHEDULE **G**

Some of Our Popular Configurations:

INDUSTRIAL POWER SUPPLIES

CATALOG NUMBER	DESCRIPTION	LIST
IPS1-60-12	Industrial Power Supply, 60W, 12V	$ 73.60
IPS1-60-24	Industrial Power Supply, 60W, 24V	$ 73.60
IPS1-60-48	Industrial Power Supply, 60W, 48V	$ 73.60
IPS1-120-12	Industrial Power Supply, 120W, 12V	$ 89.10
IPS1-120-24	Industrial Power Supply, 120W, 24V	$ 89.10
IPS1-120-48	Industrial Power Supply, 120W, 48V	$ 89.10

SPECIFICATIONS:

INDUSTRIAL POWER SUPPLIES				
		IPS1-60-12	IPS1-60-24	IPS1-60-48
OUTPUT				
	UNITS			
Nominal DC Voltage	V	12	24	48
Rated Current	A	5	2.5	1.25
Current Range	A	0 - 5	0 - 2.5	0 - 1.25
Rated Power	W	60	60	60
Ripple & Noise (max)		< 1 % of Vout	< 1 % of Vout	< 1 % of Vout
Voltage Adjustment Range	V	12 to 14	24 to 28	48 to 56
Voltage Tolerance		± 1 %		
Line Regulation		± 0.5 %		
Load Regulation		± 1 %		
Turn On Time		< 1 sec @ 230 VAC & < 3 sec @ 115 VAC, Full Load		
Hold Up Time		≥ 60 ms @ 230 VAC & ≥ 15 ms @ 115 VAC, Full Load		
Rise Time	ms	< 100		
INPUT				
Voltage Range	VAC	90 - 264		
Frequency Range	Hz	50 / 60		
Efficiency @ 230 VAC		up to 86%	up to 87%	up to 87%
AC Current		1.2A @ 115 VAC; 0.8A @ 230 VAC		
Inrush Current		< 48 Amps; Measured at 264 VAC, 25°C Ambient, Cold Start		
Leakage Current		< 1 mA; 264 VAC Input		
PROTECTION				
Overload		> 110% of Rated Output Current; Hiccup Type, Auto-recovery		
Overvoltage	VDC	17 ± 1	31.5 ± 1	61 ± 2
		Latched Type; Input AC power to be recycled to recover the power supply		
Output Short Circuit		Hiccup mode when output is shorted; Auto-recovery type		
Over Temperature		Power supply shuts down when the temperature of PCB below main transformer reaches typically 120°C. Turns on only after the temperature falls below 90°C typically and AC power is recycled thereafter.		
ENVIRONMENT				
Operating Temperature		- 25°C to + 70°C; de-rate linearly above 50°C from 100% load at 50°C to 50% load at 70°C - 25°C to 0°C startup is guaranteed with specification deviation (Output ripple can be more than 10% of the output voltage.)		
Storage Temperature	°C	- 40 to + 85		
Cooling		Natural Convection Cooled		
Humidity	RH	5 to 95 %, Non-condensing		
Altitude	m	2000		
Vibration		Component: 10 ~ 500 Hz, 2 G 10 min. / 1 cycle, period for 60 min. each along X, Y, Z axes		
SAFETY & EMC				
Dielectric Withstand Voltage	VAC	I/P to Earth: 2500 I/P to O/P: 4000 O/P to Earth: 1500		
OTHERS				
Dimension (W x H x D)	mm	43 x 109.8 x 102.7		
Weight	gms	285		
Mounting		35mm DIN Rail		
ROHS COMPLIANCE		For RoHS compliance documentation by product, refer to c3controls.com		

Specifications:

INDUSTRIAL POWER SUPPLIES				
		IPS1-120-12	IPS1-120-24	IPS1-120-48
OUTPUT				
	UNITS			
Nominal DC Voltage	V	12	24	48
Rated Current	A	8	5	2.5
Current Range	A	0 - 8	0 - 5	0 - 2.5
Rated Power	W	96	120	120
Ripple & Noise (max)		< 1 % of Vout	< 1 % of Vout	< 1 % of Vout
Voltage Adjustment Range	V	12 to 14	24 to 28	48 to 56
Voltage Tolerance		± 1 %		
Line Regulation		± 1 %		
Load Regulation		± 1 %		
Turn On Time		< 1 sec @ 230 VAC & < 3 sec @ 115 VAC, Full Load		
Hold Up Time		≥ 60 ms @ 230 VAC & ≥ 15 ms @ 115 VAC, Full Load		
Rise Time	ms	< 100		
INPUT				
Voltage Range	VAC	90 - 264		
Frequency Range	Hz	50 / 60		
Efficiency @ 230 VAC		up to 89 %		
AC Current		2.2A @ 115 VAC; 1.5A @ 230 VAC		
Inrush Current		< 48 Amps; Measured at 264 VAC, 25°C Ambient, Cold Start		
Leakage Current		< 1 mA; 264 VAC Input		
PROTECTION				
Overload		> 110% of Rated Output Current; Hiccup Type, Auto-recovery		
Overvoltage	VDC	17 ± 1	31.5 ± 1	61 ± 2
		Latched Type; Input AC power to be recycled to recover the power supply		
Output Short Circuit		Hiccup mode when output is shorted; Auto-recovery type		
Over Temperature		Power supply shuts down when the temperature of PCB below main transformer reaches typically 120°C. Turns on only after the temperature falls below 90°C typically and AC power is recycled thereafter.		
ENVIRONMENT				
Operating Temperature		- 25°C to + 70°C; de-rate linearly above 50°C from 100% load at 50°C to 50% load at 70°C - 25°C to 0°C startup is guaranteed with specification deviation (Output ripple can be more than 10% of the output voltage.)		
Storage Temperature	°C	- 40 to + 85		
Cooling		Natural Convection Cooled		
Humidity	RH	5 to 95 %, Non-condensing		
Altitude	m	2000		
Vibration		Component: 10 ~ 500 Hz, 2 G 10 min. / 1 cycle, period for 60 min. each along X, Y, Z axes		
SAFETY & EMC				
Dielectric Withstand Voltage	VAC	I/P to Earth: 2500 I/P to O/P: 4000 O/P to Earth: 1500		
OTHERS				
Dimension (W x H x D)	mm	43 x 109.8 x 102.7		
Weight	gms	350		
Mounting		35mm DIN Rail		
ROHS COMPLIANCE		For RoHS compliance documentation by product, refer to c3controls.com		

SPECIFICATIONS:

INDUSTRIAL POWER SUPPLIES				
		IPS1-240-12	IPS1-240-24	IPS1-240-48
OUTPUT				
	UNITS			
Nominal DC Voltage	V	12	24	48
Rated Current	A	18	10	5
Current Range	A	0 - 18	0 - 10	0 - 5
Rated Power	W	240	240	240
Ripple & Noise (max)		< 1 % of Vout	< 1 % of Vout	< 1 % of Vout
Voltage Adjustment Range	V	24 to 28	24 to 28	48 to 56
Voltage Tolerance		± 1 %		
Line Regulation		± 1 %		
Load Regulation		± 1 %		
Turn On Time		< 2 sec @ Full Load		
Hold Up Time		> 25 ms @ 12V & > 16 ms @ 14V @ 115/230 VAC, Full Load	> 25 ms @ 24V & > 16 ms @ 28V @ 115/230 VAC, Full Load	> 25 ms @ 48V & > 16 ms @ 56V @ 115/230 VAC, Full Load
Rise Time	ms	< 100		
INPUT				
Voltage Range	VAC	90 - 264 De-rate output power linearly below 100 VAC from 100% @ 100 VAC to 90% @ 90 VAC		
Frequency Range	Hz	50 / 60		
Power Factor		> 0.95 @ Full Load over entire input range		
Efficiency @ 230 VAC		> 92 %	> 93 %	> 93 %
AC Current		2.4A @ 115 VAC; 1.2A @ 230 VAC		
Inrush Current		< 60 Amps; Measured at 264 VAC, 25°C Ambient, Cold Start		
Leakage Current		< 1 mA; 264 VAC Input		
PROTECTION				
Overload		110% to 140% of Rated Output Current; Hiccup Type; Auto-recovery		
Overvoltage	VDC	16 ± 0.5	31 ± 0.5	60 ± 1
		Latched Type; Input AC power to be recycled to recover the power supply		
Output Short Circuit		Hiccup mode when output is shorted; Auto-recovery type		
Over Temperature		The power supply shuts down when the temperature of PCB below PFC choke reaches typically 120°C. It recovers automatically when temperature falls to typically 90°C.		
FUNCTION				
DC OK Signal	V	Contact Closes @ 11.5 (typical) / Contact Opens @ 11.0 (typical)	Contact Closes @ 23.0 (typical) / Contact Opens @ 22.5 (typical)	Contact Closes @ 46.0 (typical) / Contact Opens @ 45.0 (typical)
		Contact Rating: 30 VDC 1A; 60 VDC 0.5A; 125 VAC 0.5A; resistive load, min. current 1 mA		
ENVIRONMENT				
Operating Temperature		- 25°C to + 70°C; de-rate linearly above 50°C from 100% load at 50°C to 50% load at 70°C - 25°C to 0°C startup is guaranteed with specification deviation (Output ripple can be more than 10% of the output voltage.)		
Storage Temperature	°C	- 40 to + 85		
Cooling		Natural Convection Cooled		
Humidity	RH	5 to 95 %, Non-condensing		
Altitude	m	2000		
Vibration		Component: 10 ~ 500 Hz, 2 G 10 min. / 1 cycle, period for 60 min. each along X, Y, Z axes		
SAFETY & EMC				
Dielectric Withstand Voltage	VAC	I/P to Earth: 2500 I/P to O/P: 4000 O/P to Earth: 1500 O/P to DC-OK: 500		
OTHERS				
Dimension (W x H x D)	mm	50 x 136 x 135		
Weight	gms	645		
Mounting		35mm DIN Rail		
ROHS COMPLIANCE		For RoHS compliance documentation by product, refer to c3controls.com		

Specifications:

INDUSTRIAL POWER SUPPLIES			
		IPS1-480-24	IPS1-480-48
OUTPUT			
	UNITS		
Nominal DC Voltage	V	24	48
Rated Current	A	20	10
Current Range	A	0 - 20	0 - 10
Rated Power	W	480	480
Ripple & Noise (max)		< 1 % of Vout	< 1 % of Vout
Voltage Adjustment Range	V	24 to 28	48 to 56
Voltage Tolerance		± 1 %	
Line Regulation		± 1 %	
Load Regulation		± 1 %	
Turn On Time		< 2 sec; @ Full Load	
Hold Up Time		> 20 ms @ 24V & > 12 ms @ 28V @ 115/230 VAC, Full Load	> 20 ms @ 48V & > 12 ms @ 56V @ 115/230 VAC, Full Load
Rise Time	ms	< 100	
INPUT			
Voltage Range	VAC	90 - 264 De-rate output power linearly below 100 VAC from 100% @ 100 VAC to 90% @ 90 VAC	
Frequency Range	Hz	50 / 60	
Power Factor		> 0.95 @ Full Load over entire input range	
Efficiency @ 230 VAC		> 93.5 %	> 94 %
AC Current		4.8A @ 115 VAC; 2.4A @ 230 VAC	
Inrush Current		< 60 Amps; Measured at 264 VAC, 25°C Ambient, Cold Start	
Leakage Current		< 1 mA; 264 VAC Input	
PROTECTION			
Overload		110% to 140% of Rated Output Current; Hiccup Type: Auto-recovery	
Overvoltage	VDC	31 ± 0.5	60 ± 1
		Latched Type; Input AC power to be recycled to recover the power supply	
Output Short Circuit		Hiccup mode when output is shorted; Auto-recovery type	
Over Temperature		Power supply shuts down when the temperature of PCB below main transformer reaches typically 120°C. Turns on only after the temperature falls below 90°C typically and AC power is recycled thereafter.	
FUNCTION			
DC OK Signal	V	Contact Closes @ 23.0 (typical) / Contact Opens @ 22.5 (typical)	Contact Closes @ 46.0 (typical) / Contact Opens @ 45.0 (typical)
		Contact Rating: 30 VDC 1A; 60 VDC 0.5A; 125 VAC 0.5A; resistive load, min. current 1 mA	
ENVIRONMENT			
Operating Temperature		- 25°C to + 70°C; de-rate linearly above 50°C from 100% load at 50°C to 50% load at 70°C - 25°C to 0°C startup is guaranteed with specification deviation (Output ripple can be more than 10% of the output voltage.)	
Storage Temperature	°C	- 40 to + 85	
Cooling		Natural Convection Cooled	
Humidity	RH	5 to 95 %, Non-condensing	
Altitude	m	2000	
Vibration		Component: 10 ~ 500 Hz, 2 G 10 min. / 1 cycle, period for 60 min. each along X, Y, Z axes	
SAFETY & EMC			
Dielectric Withstand Voltage	VAC	I/P to Earth: 2500 I/P to O/P: 4000 O/P to Earth: 1500 O/P to DC-OK: 500	
OTHERS			
Dimension (W x H x D)	mm	60 x 154 x 158.55	
Weight	gms	1050	
Mounting		35mm DIN Rail	
ROHS COMPLIANCE		For RoHS compliance documentation by product, refer to c3controls.com	

Compliances:

APPLICABLE EMI / EMC STANDARDS		
CATEGORY	**REFERENCE STANDARDS**	**TESTING LEVEL**
Conducted Emission	CISPR11	CLASS A (for 60W & 120W) CLASS B (for 240W & 480W)
Radiated Emission	CISPR22	CLASS A
Electrostatic Discharge	IEC 61000-4-2	Level 4, Criteria A
		Level 3, Criteria A
Radiated Susceptibility	IEC 61000-4-3	Level 3, Criteria B
Electrical Fast Transient / Burst	IEC 61000-4-4	Level 3, Criteria A
Surge	IEC 61000-4-5	Level 3, Criteria A
Conducted Susceptibility	IEC 61000-4-6	Level 3, Criteria B
Power Frequency Magnetic Field	IEC 61000-4-8	Level 4, Criteria A
Voltage Dips & Interruption	EC 61000-4-11	Criteria A & B
Safety	UL 508 approved (E336563) Designed to meet IEC 62368-1	

DERATING CURVES

IPS1-60-** & IPS1-120-**

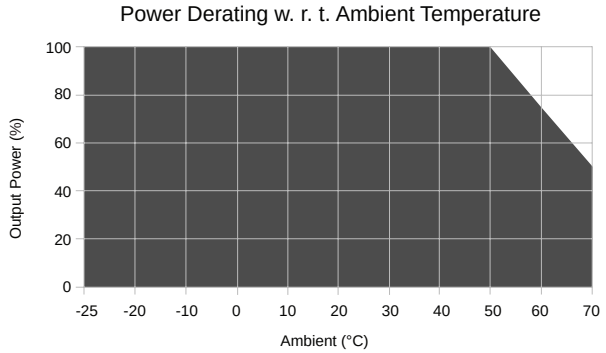

IPS1-240-** & IPS1-480-**

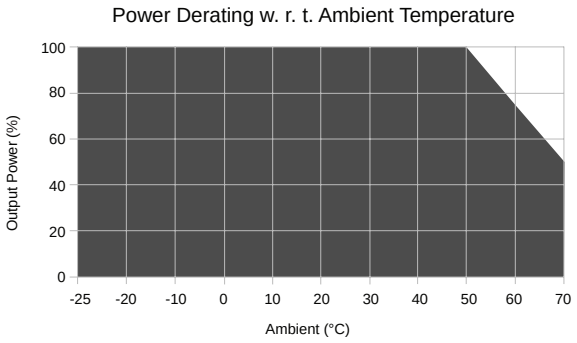

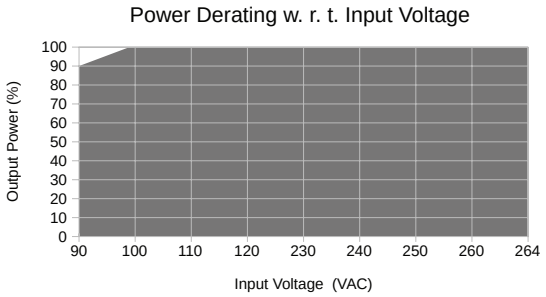

DIMENSIONS /

IPS1-60-** & IPS1-120-**

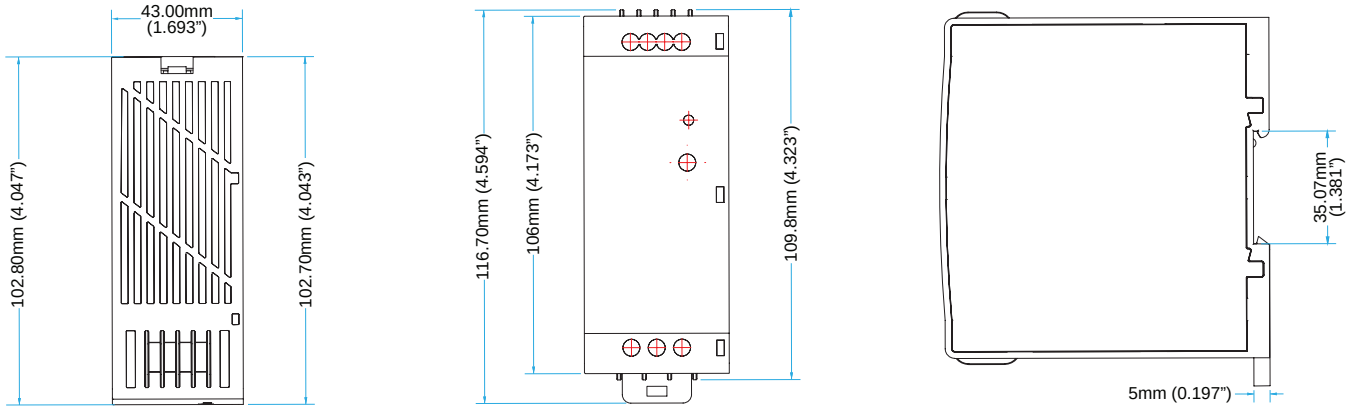

IPS1-240-**

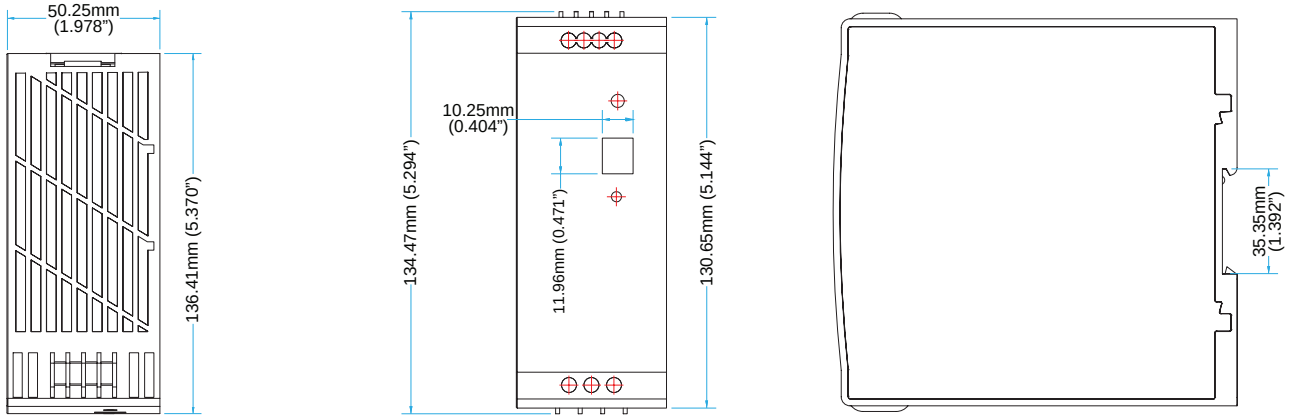

IPS1-480-**

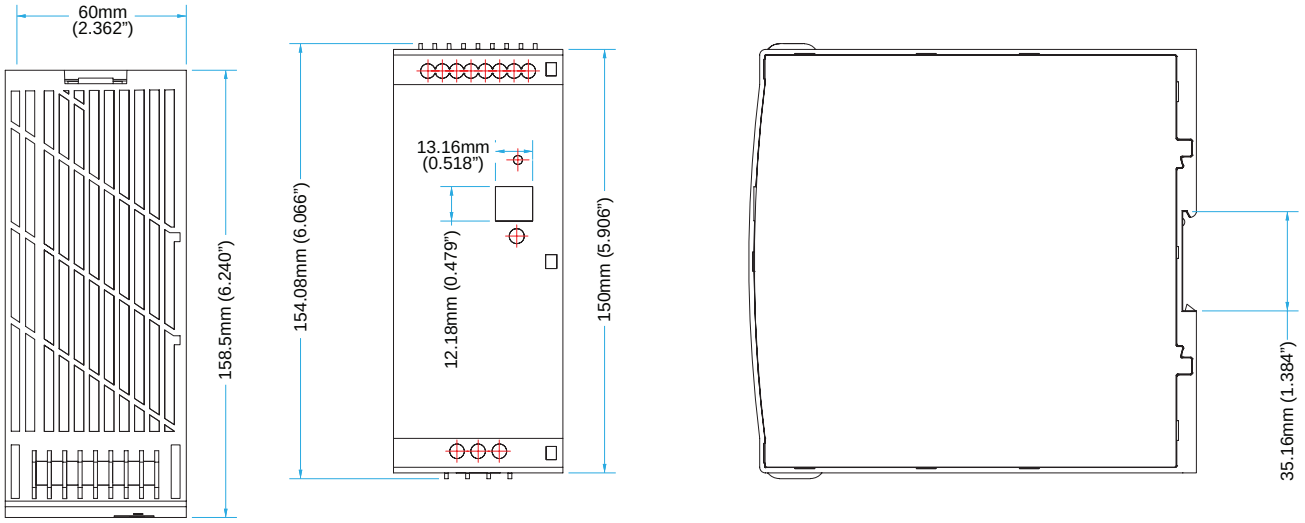

VISIT C3CONTROLS.COM TO DOWNLOAD CAD DRAWINGS

NEW

ENCLOSED POWER SUPPLIES

series EPS

c3controls' Series EPS (Enclosed Power Supplies) provides reliable 24VAC power to HVAC controllers in VAV (variable air volume) systems. These assemblies offer a convenient construction consisting of one to two transformers varying in size to provide one to five 24VAC 100VA Class 2 outputs housed within a single metal enclosure. Additionally, these enclosed power supplies provide on/off control, power indication, equipment overcurrent protection, as well as options for voltage separation compartments and convenience receptacle outlets. These versatile products are UL 916 listed ensuring safety and easy acceptance in your application.

Section 33

Enclosed Power Supplies	4
Specifications	5
Circuit Diagrams	6
Dimensions	7

PROVEN

Conformity to Standards:
UL 916

Certifications:
UL File #: E530348

Visit c3controls.com to download product certifications.

NOTE: The scope (range, description, price, specifications, dimensions, etc.) of the product featured in this section is subject to change without notice. Refer to c3controls.com for product updates.

NEW ENCLOSED POWER SUPPLIES

c3controls offers a comprehensive line of Enclosed Power Supplies that are designed to provide consistent power to various types of applications. c3controls' Enclosed Power Supplies are a reliable and cost-effective solution for your power supply needs. Check out all the innovative features these Enclosed Power Supplies have to offer.

MANUFACTURED TO DELIVER THE MOST RELIABLE AND QUALITY POWER

✓ **Proven**	Our Series EPS Enclosed Power Supplies are UL Listed to meet global standards requirements and are compliant with RoHS directives.
✓ **Secure Installation**	Quick and simple installation as the product is prepackaged and the main breaker/switch has access outside the enclosure.
✓ **Multi-Winding Transformers**	The transformer has multiple windings that divides the output power to individual outputs, each with 100VA of an available power provided by a 4 ampere circuit breaker and LED indicator.
✓ **Environmentally Secure**	Entire assembly comes enclosed in a metal enclosure designed and tested for ensuring operation in extreme temperatures, to keep your application running.
✓ **Visible Certifications**	Our product certifications and electrical ratings are clearly marked on the outside of the enclosure for easy reference during installation.
✓ **Limited Lifetime Warranty***	Every product is backed by our limited lifetime warranty—unmatched in the industry—bringing you quality components that perform in the most demanding applications.
✓ **Guaranteed Same-Day Shipping***	Product availability reduces inventory, and improves cash-flow—saving you money. With c3controls any order for standard catalog items received by 6:00pm ET is guaranteed to ship same-day.
✓ **Advantage Pricing**	Our approach to product development, manufacturing, and focus on servicing the OEM and Electrical Equipment Builder reduces cost. The result—the best value in the industry.

*See c3controls Terms & Conditions

EPS-S500AC5-120-24-B

EPS-S300AC3-120-24-F

EPS-S100AC1-120-24-F

EPS-S100AC1-120-24-B

UNIQUE PRODUCT LINE FEATURES

AVAILABILITY OF ACCESSORIES

Each rated enclosed power supply has an option to an accessory outlet available for convenient access to the power receptacle.

INNOVATIVE DESIGN/CONTROLLED AND SECURE OUTPUTS

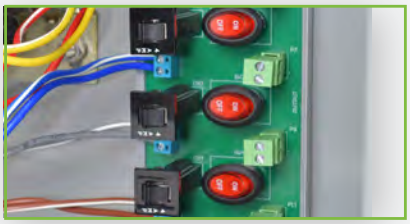

The transformer steps down the input voltage to 24VAC at the output. Each 24VAC output has its own circuit breaker and ON/OFF switch to control specific outputs.

COMPACT

Ultra-compact design to save valuable space.

ENCLOSURE FEATURES

The enclosure of S300 and S500 have optional separation between high and low voltage. The two separate compartments have different removable covers to access high and low voltage compartments and each being fastened by its own hardware.

FIND IT FAST

Enclosed Power Supplies

- Certifications
- Specifications
- Dimension Drawings
- Installation Instructions
- Easy to Buy

c3controls.com

ENCLOSED POWER SUPPLIES SELECTION GUIDE

NEW

CATALOG NUMBER	METALLIC NEMA 1 ENCLOSURE	TRANSFORMER	120VAC PRIMARY / 24VAC SECONDARY VOLTAGE	10A ILLUMINATED CIRCUIT BREAKER	120VAC CONVENIENCE RECEPTACLE	PRIMARY TO SECONDARY CIRCUIT SEPARATION	EXTERNAL TERMINAL STRIP	LIST
EPS-S100AC1-120-24-B	✓	Single 100VA, AC, 1 ungrounded Class 2 output circuits	✓		2 Receptacles		✓	$ 184.78
EPS-S100AC1-120-24-F	✓	Single 100VA, AC, 1 ungrounded Class 2 output circuits	✓	✓	2 Receptacles		✓	$ 193.76
EPS-D100AC1-120-24-B	✓	Dual 100VA, AC, 2 ungrounded Class 2 output circuits	✓		2 Receptacles		✓	$ 310.54
EPS-D100AC1-120-24-F	✓	Dual 100VA, AC, 2 ungrounded Class 2 output circuits	✓	✓	2 Receptacles		✓	$ 328.86
EPS-S300AC3-120-24-B	✓	Single 300VA, AC, 3 ungrounded Class 2 output circuits	✓					$ 596.00
EPS-S300AC3-120-24-F	✓	Single 300VA, AC, 3 ungrounded Class 2 output circuits	✓	✓	1 Receptacle	✓		$ 970.26
EPS-S500AC5-120-24-B	✓	Single 500VA, AC, 5 ungrounded Class 2 output circuits	✓					$ 812.41
EPS-S500AC5-120-24-F	✓	Single 500VA, AC, 5 ungrounded Class 2 output circuits	✓	✓	1 Receptacle	✓		$1152.08

Specifications:

ENCLOSED POWER SUPPLIES					
		S500	S300	S100	D100
	UNITS				
TRANSFORMER					
Transformer Size	VA	500	300	100	100
Number of Transformers		1	1	1	2
INPUT CIRCUIT (PRIMARY)					
Input Voltage		120VAC 60 Hz			
Input Terminals					
Wire Range/Size	AWG	24 - 12			
Terminal Torque	in-lbs	4.5			
Convenience Receptacle					
-F Assemblies		NEMA 5-15R 125VAC 15A, 1 Receptacle		NEMA 5-15R 125VAC 15A, 2 Receptacles	
-B Assemblies		—		NEMA 5-15R 125VAC 15A, 2 Receptacles	
Overcurrent Protection					
-F Assemblies		10A UL 1077 Circuit Breaker			
-B Assemblies		No provided input circuit overcurrent protection			
OUTPUT CIRCUIT(S)					
Number of Output Circuits		5	3	1	2
Output Rating (Each)		100VA Ungrounded Class 2 (UL Listed)			
Output Voltage		24VAC 60 Hz			
Output Terminals					
Wire Range/Size	AWG	24 - 12		26 - 14	
Terminal Torque	in-lbs	4.4		7	
ENVIRONMENTAL RATING		NEMA Type 1			
ENCLOSURE MATERIAL		Carbon Steel			
ENCLOSURE DIMENSIONS		See dimension drawings			
UL STANDARDS		UL 916 Listed, UL File #: E530348 Designed for UL 916 with Class 2 Output Circuits			
ROHS COMPLIANCE		For RoHS compliance documentation by product, refer to c3controls.com			

EPS-S500AC5-120-24 & EPS-S300AC3-120-24 ASSEMBLIES

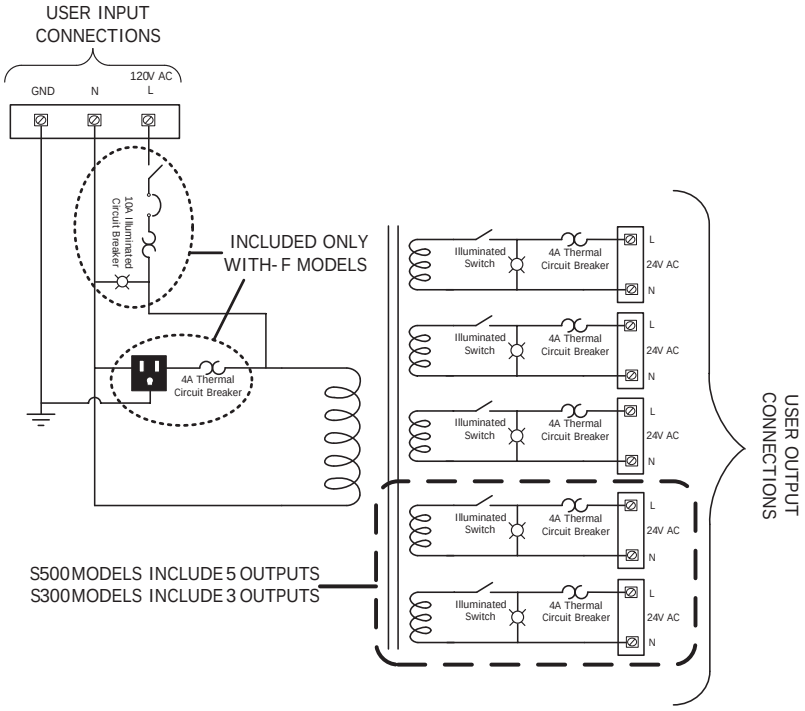

EPS100AC1-120-24 & EPS-D100AC1-120-24 ASSEMBLIES

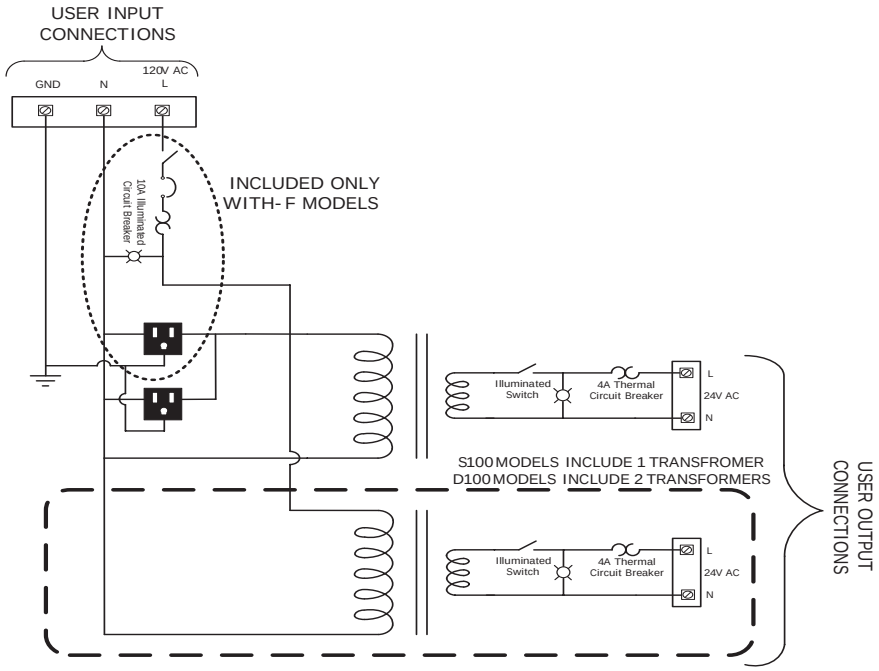

EPS-S500AC5-120-24 & EPS-S300AC3-120-24 ASSEMBLIES

"-F" Assemblies include circuit breaker, outlet and thermal breaker
"-B" Assemblies do not include circuit breaker, outlet and thermal breaker

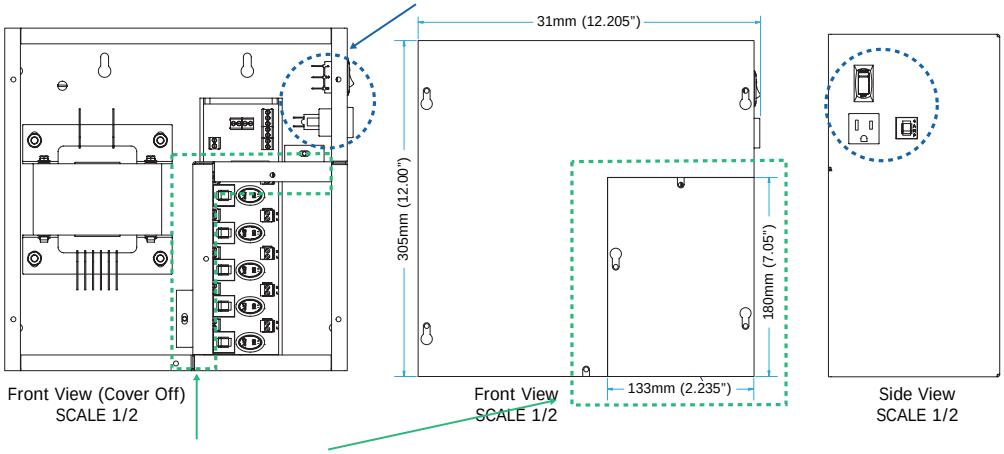

Front View (Cover Off)
SCALE 1/2

Front View
SCALE 1/2

Side View
SCALE 1/2

"-F" Assemblies include primary to secondary circuit separationplate and a two piece cover
"-B" Assemblies do not include primary to secondary circuit separationplate and use a one piece cover

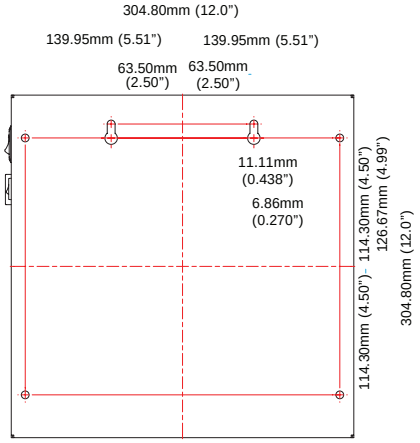

Enclosure Mounting Hole Locations
SCALE 1/2

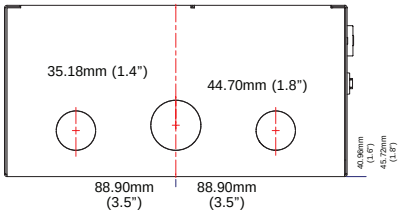

Bottom View
SCALE 1/2

EPS-S100AC1-120-24 ASSEMBLIES

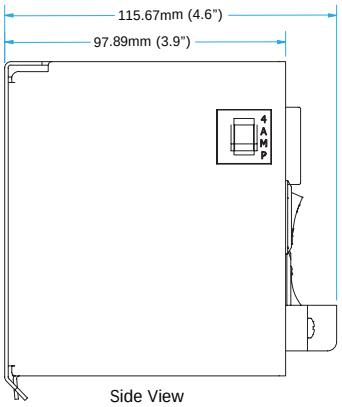

Side View
SCALE 3/4

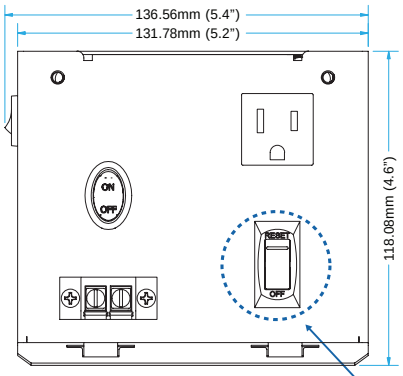

Front View
SCALE 3/4

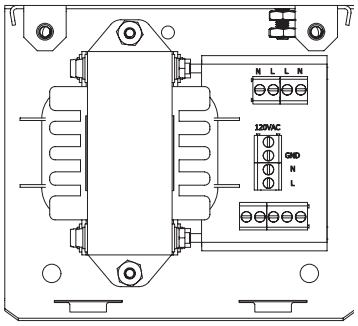

Front View (Cover Off)
SCALE 3/4

"- F" Assemblies include circuit breaker
"- B" Assemblies do not include circuit breaker

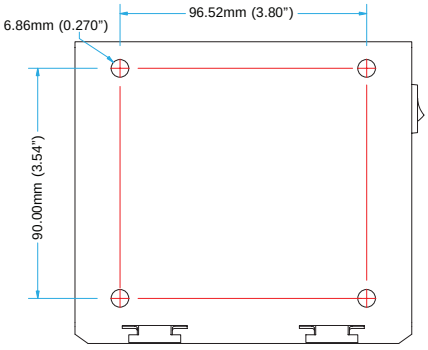

Back View
SCALE 3/4

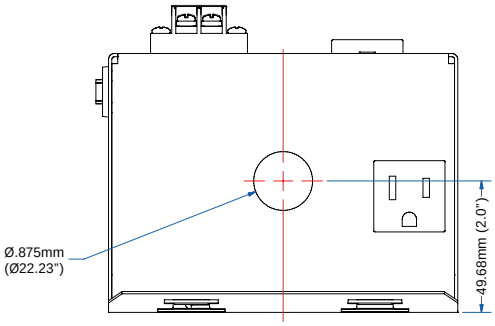

Bottom View
SCALE 3/4

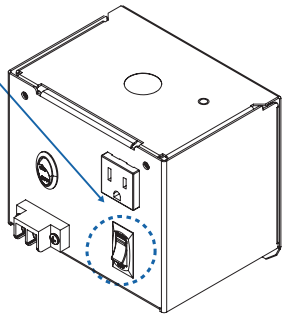

Isometric View
SCALE 3/4

EPS-D100AC1-120-24 ASSEMBLIES

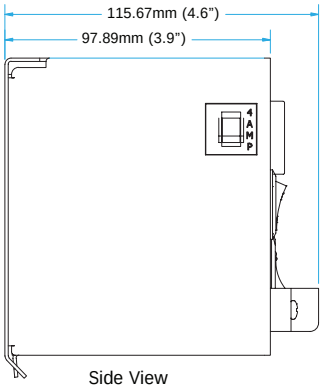

Side View
SCALE 3/4

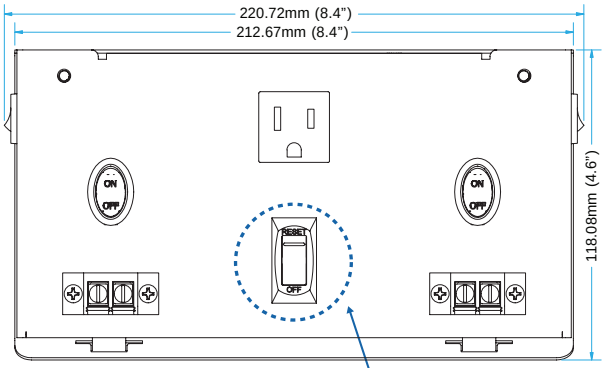

Front View
SCALE 3/4

"-F" Assemblies include circuit breaker
"-B" Assemblies do not include circuit breaker

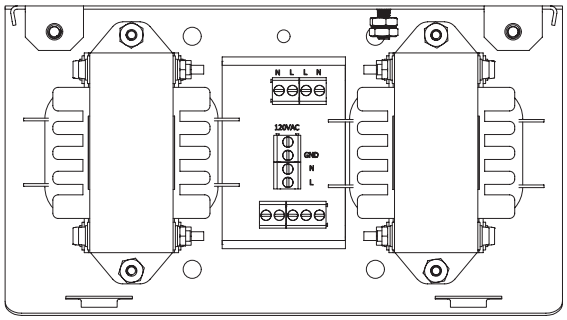

Front View (Cover Off)
SCALE 3/4

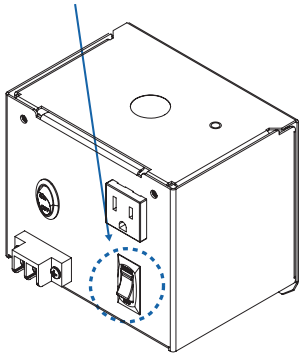

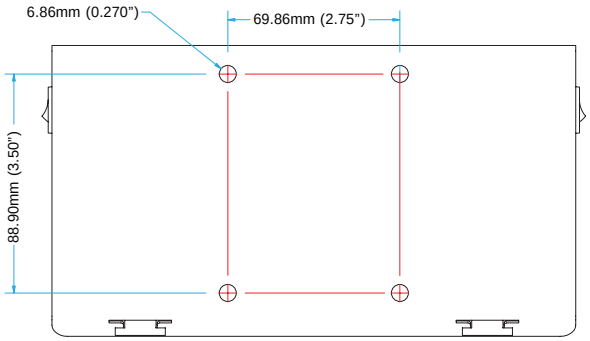

Back View
SCALE 3/4

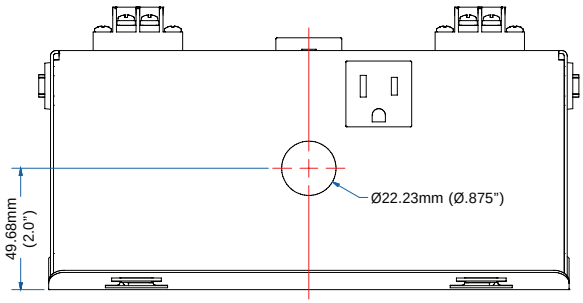

Bottom View
SCALE 7/8

UL508A BOTTOM MOUNT VFD BYPASS PANELS

The c3controls' ECP-BP series offers a configurable and UL 508A-listed solution for VFD bypass applications. This series provides a two or three contactor bypass design that seamlessly integrates with various VFD brands for increased flexibility. Available in Type 1 and Type 4 carbon steel enclosures, these panels fit directly below your VFD of choice and are conveniently shaped as tall slim panels to minimize their footprint. c3controls' VFD Bypass Panels come with all the features and benefits of our Series 300 Contactors, Series TB IEC Terminal Blocks, and Series 22mm IEC Pilot Devices. Our Series ECP-BP panels are factory wired with a control transformer saving you time and reducing installation costs.

Section 36

VFD Bypass Panels UL508	4
Specifications	6
Peak Let-Through Curve	6
Wiring Schematics	7
Dimensions	10

PROVEN

Conformity to Standards:	Certifications:
CONTACTORS	
UL 508, 60947-4-1A	UL File #: E236197 (Guide NLDX, NLDX7), E68568 (Guide NKCR, NKCR7)
CSA C22.2 No. 14	
IEC 60947-1, 60947-4-1	CE Marked (per EU Low Voltage Directive 2006/95/EC and RoHS Directive 2011/65/EU)
PILOT DEVICES	
UL 508	UL File #: E68568 (Guide NKCR, NKCR7)
CSA C22.2 No. 14	
IEC 60947-1, 60947-5-1	CE Marked (per EU Low Voltage Directive 2006/95/EC and RoHS Directive 2011/65/EU)
ENCLOSURES	
UL 50	UL Listed
CSA C22.2 No. 94	CSA Certified
IEC 60529	

Visit c3controls.com to download product certifications.

NOTE: The scope (range, description, price, specifications, dimensions, etc.) of the product featured in this section is subject to change without notice. Refer to c3controls.com for product updates.

UL508A BOTTOM MOUNT VFD BYPASS PANELS

All our products are fully certified, rated, and backed by our 36-month warranty to meet the needs of the machine builder, and our bypass panels are no exception. Check out the incredible features in the chart below!

DELIVERING SUPERIOR PRODUCT QUALITY AND MANUFACTURING EXCELLENCE	
✓ **Proven**	Our Series ECP-BP Bottom Mount VFD Bypass Panels are UL508A Listed and CE marked meeting global standards requirements.
✓ **Enclosure Flexibility**	Our ECP-BP Bottom Mount VFD Bypass Panels are available in two versions of Carbon Steel (Type 1 or Type 3R, 4 & 12).
✓ **Reliable**	For enhanced safety and operational reliability, mechanically interlocked contactors ensure a seamless transition between VFD and bypass modes for motor operation.
✓ **Simple Solution**	c3controls' Electrical Engineers have designed these bottom mount VFD Bypass Panels specifically for any fan, pump, conveyor, or air handling VFD applications.
✓ **36-Month Warranty***	Every product is backed by our 36-Month Warranty—giving you confidence in the quality, reliability, and performance of components designed for the most demanding applications.
✓ **Quick Shipment**	We assemble, test and ship fully assembled and wired panels within 15 days,—and confirm every order ensuring accuracy. NOTE: Series ECP-BP VFD Bypass Panels ship via LTL Freight Collect and do not qualify for standard ground shipping or free shipping.
✓ **Advantage Pricing**	Our approach to product development, manufacturing, and focus on servicing the OEM and Electrical Equipment Builder reduces cost. The result—the best value in the industry.

*See c3controls Terms & Conditions

Without Local Bypass Control

With Local Bypass

UNIQUE PRODUCT LINE FEATURES

FACTORY ASSEMBLED AND WIRED

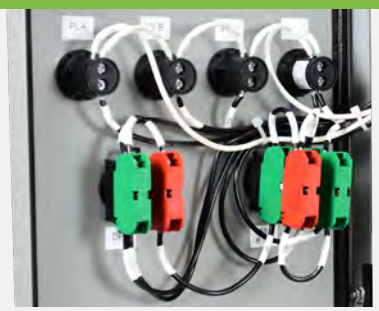

Factory-assembled and wired bypass panels offer the convenience of a single catalog number, resulting in a more efficient bill of materials.

PRE-CONFIGURED

The contactor, disconnect, and transformer selections have been pre-configured based on your fuse size, streamlining the process of ordering and configuring fully assembled panels.

HIGH FAULT SCCR

Configuration options for high fault short circuit current rating of up to 100kA providing safety and reliability in high fault applications.

PRE-WIRED CONTROL CIRCUITS

The bypass panel control circuits come pre-wired with a control transformer that supplies 24VAC power, facilitating straightforward field installation. Additionally, all terminal blocks and wires are clearly labeled for ease of use.

SMALL FOOTPRINT

These slender panels are designed to fit directly beneath your chosen VFD and have been thoughtfully shaped to minimize their footprint.

FIND IT FAST

UL508A Bottom Mount
VFD Bypass Panels

- Certifications
- Specifications
- Dimension Drawings
- Installation Instructions
- Easy to Buy

c3controls.com

IT'S EASY TO BUILD YOUR OWN VFD BYPASS PANEL

Simply pick the code number from each of the sections below and combine them to build your part number.

UL508A Bottom Mount VFD Bypass Panels

ECP - _____ - _____ - _____ _____ - _____ - _____
I II III IV V VI VII

Example: To build one of our most popular VFD Bypass Panels, the part number would be ECP + II + III + IV + V + VI + VII or ECP-BP2-460V3P-F030-M1-01

I. PRODUCT SERIES

CODE	DESCRIPTION	LIST
ECP	Series ECP, Engineered Control Panel	$ 1,000.00

II. FUNCTION

CODE	DESCRIPTION	LIST
BP2	2 Contactor Bypass, VFD Output & Bypass Output	$ 511.00
BP3	3 Contactor Bypass, VFD Output & Bypass Output with Isolation Contactor	$ 689.00

III. INPUT VOLTAGE

CODE	DESCRIPTION	LIST
208V3P	3 Phase, 208V	$ 230.00
230V3P	3 Phase, 230V	$ 230.00
460V3P	3 Phase, 460V	$ 230.00

IV. DISCONNECT SWITCH OPTIONS

CODE	DESCRIPTION
D	UL98 Non-Fused, 20kA
F	UL98 Fused with Class J Fuses, 100kA

V. DISCONNECT / FUSE / CONTACTOR SIZE

CODE	DISCONNECT/ FUSE SIZE (A)	PANEL SCCR	CONTACTOR SIZE	LIST
	FOR UL98 NON-FUSED DISCONNECT SWITCHES (CODE D)			
030	30A Disconnect	20kA	40A	$ 310.00
	FOR UL98 FUSED DISCONNECT SWITCHES (CODE F)			
006	6A Class J Time Delay Fuse	100kA	25A	$ 840.00
010	10A Class J Time Delay Fuse	100kA	25A	$ 840.00
015	15A Class J Time Delay Fuse	100kA	25A	$ 840.00
020	20A Class J Time Delay Fuse	100kA	25A	$ 840.00
025	25A Class J Time Delay Fuse	100kA	25A	$ 840.00
030	30A Class J Time Delay Fuse	100kA	25A	$ 840.00
035	35A Class J Time Delay Fuse	100kA	40A	$ 1,090.00
040	40A Class J Time Delay Fuse	100kA	40A	$ 1,090.00

VI. ENCLOSURE RATING AND MATERIAL

CODE	ENVIRONMENTAL RATING	MATERIAL	DIMENSIONS BASED ON IV & V SELECTIONS	LIST
M1	Type 1	Carbon Steel	Frame 2 - Dimensions 9" x 30" x 8" (W x H x D)	$ 560.00
M4	Type 3R, 4 & 12	Carbon Steel	Frame 2 - Dimensions 9" x 30" x 8" (W x H x D)	$ 924.00

VII. PILOT DEVICES

CODE	DESCRIPTION	LIST
00	Without Local Bypass Control	$ 50.00
01	With Local Bypass Control	$ 200.00

DISCOUNT SCHEDULE **H**

Bottom Mount VFD Bypass Panels

c3controls Series ECP-BP Bottom Mount VFD Bypass Panels are assembled from our Series 300 Contactors, Series TB IEC Terminal Blocks, and Series 22mm IEC Pilot Devices. Our Series ECP-BP panels are factory wired with a control transformer saving you time and reducing installation costs.

Product features include:

- VFD Bypass Panels offer the convenience of a single catalog number.
- Provides the same great features and benefits as our Series 300 Contactors, Series TB IEC Terminal Blocks, and Series 22mm IEC Pilot Devices.
- Carbon Steel enclosure comes in two versions; Type 1 or Type 3R, 4 & 12.
- Black/Red operating handle can be padlocked in the OFF position for extra safety and security needed during maintenance activities.
- Conveniently placed input and output terminal blocks provide easy access and quick installation.
- Compact panel size resulting in space savings and lower installed costs.

LTL Freight Collect Required
Ships separately from standard products unless otherwise requested.

Some of Our Popular Configurations:

VFD BYPASS PANEL SERIES		
CODE	**DESCRIPTION**	**LIST**
ECP-BP2-460V3P-F030-M1-01	2-Contactor Bypass, 460VAC 3-Phase Input, Fused Disconnect, 30A Class J Time Delay Fuses, Type 1 Carbon Steel Enclosure With Local Bypass	$ 3,341.00
ECP-BP3-460V3P-F020-M4-01	3-Contactor Bypass, 460VAC 3-Phase Input, Fused Disconnect, 20A Class J Time Delay Fuses, Type 4 Carbon Steel Enclosure With Local Bypass	$ 3,883.00
ECP-BP2-208V3P-N030-M1-00	2-Contactor Bypass, 208VAC 3-Phase Input, Non-Fused Disconnect, Type 1 Carbon Steel Enclosure Without Local Bypass Control	$ 2,611.00

Specifications:

SERIES ECP-BP VFD BYPASS PANEL SPECIFICATIONS										
		DISCONNECT & POWER SIZE								
		D030	F006	F010	F015	F020	F025	F030	F035	F040
	UNITS									
ELECTRICAL GENERAL										
Max. Rated Operating Voltage, Ue	VAC	460								
Short Circuit Current Rating	kA	20	100							
Disconnect Rating	A	30 Non-Fused	30 Fused						60 Fused	
Class J Time Delay Fuse Size	A	—	6	10	15	20	25	30	35	40
Fuse Let-Through Characteristics		See diagram below for Maximum Instantaneous Peak Let-Through Curves								
Transformer Size	VA	150								
Transformer Primary Voltage(s)	VAC	208/230/460								
Transformer Secondary Voltage(s)	VAC	24								
Contactor Frame Size		S40	S25					S40		
COIL CHARACTERISTICS		For detailed contactor specifications by contactor frame size rating code, refer to Sec. 4 Page 14 of the catalog.								
Rated Insulation Voltage, Ui	V	1,000								
Operating Limits		80 ~ 110% of Rated Coil Voltage								
ENVIRONMENTAL										
Altitude	m / ft.	3,000 / 9,792								
Ambient Operating Temperature	°C / °F	-20 to 55 / -4 to 131								
Ambient Storage Temperature	°C / °F	-50 to 80 / -58 to 176								
Enclosure: Carbon Steel (M1)		Type 1								
Enclosure: Carbon Steel (M4)		Type 3R, 4 & 12								
For additional technical information including terminal torque requirements and wire information reference the corresponding schematics and installation instructions at c3controls.com.										

Maximum Instantaneous Peak Let-Through Curve - Class J Time Delay Fuses:

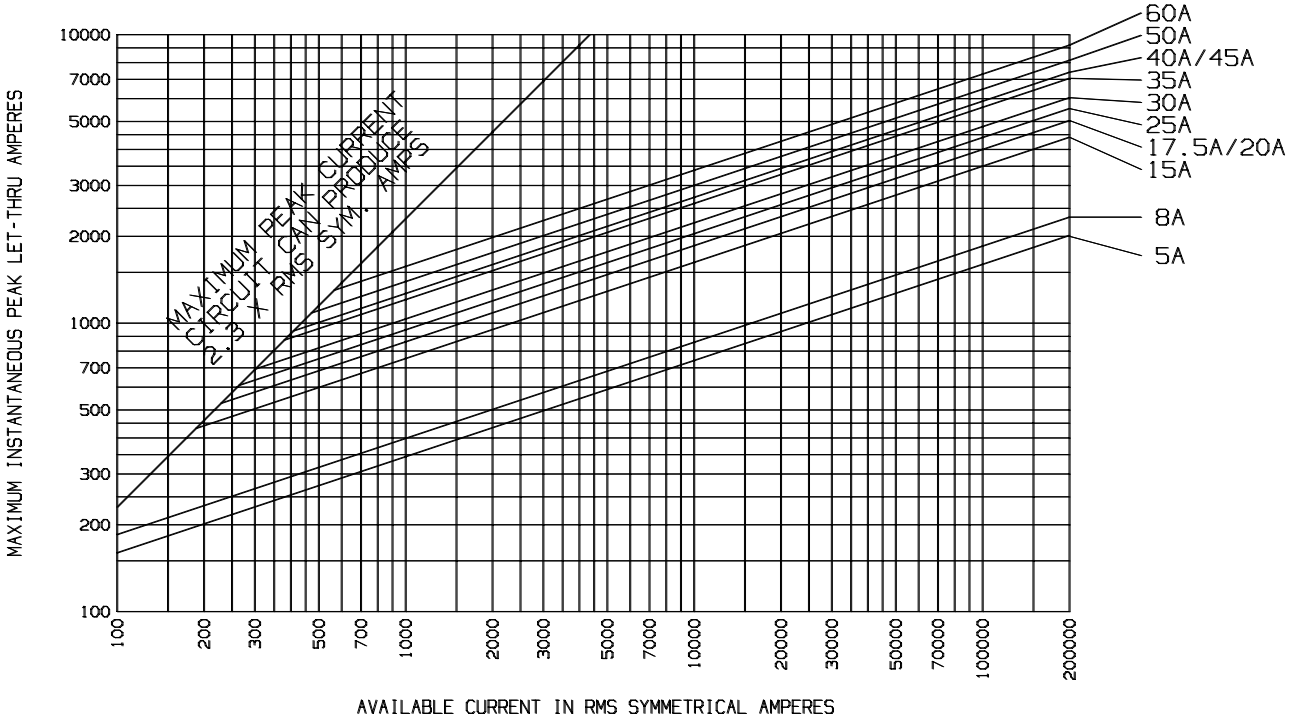

2-Contactor Bypass Power Circuit

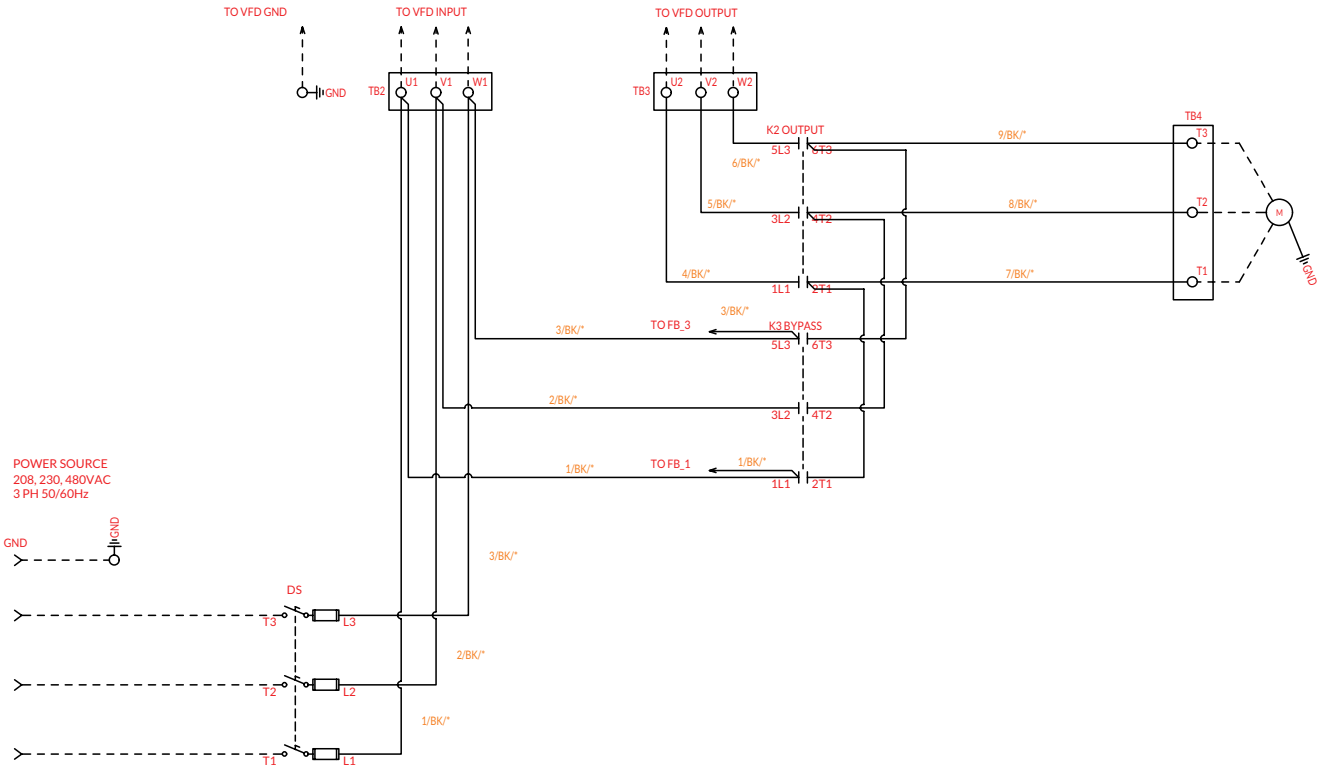

3-Contactor Bypass Power Circuit

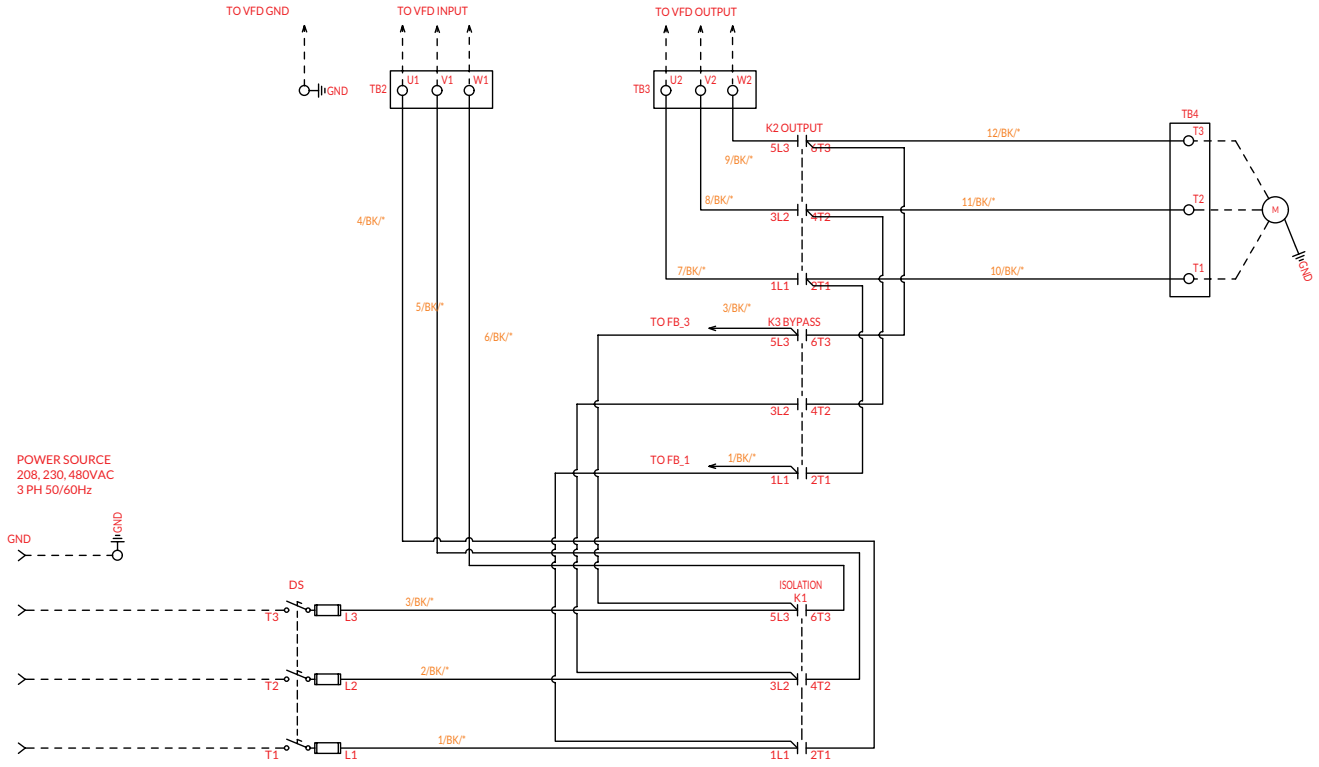

2 Contactor Bypass Control Circuit without Local Bypass Control

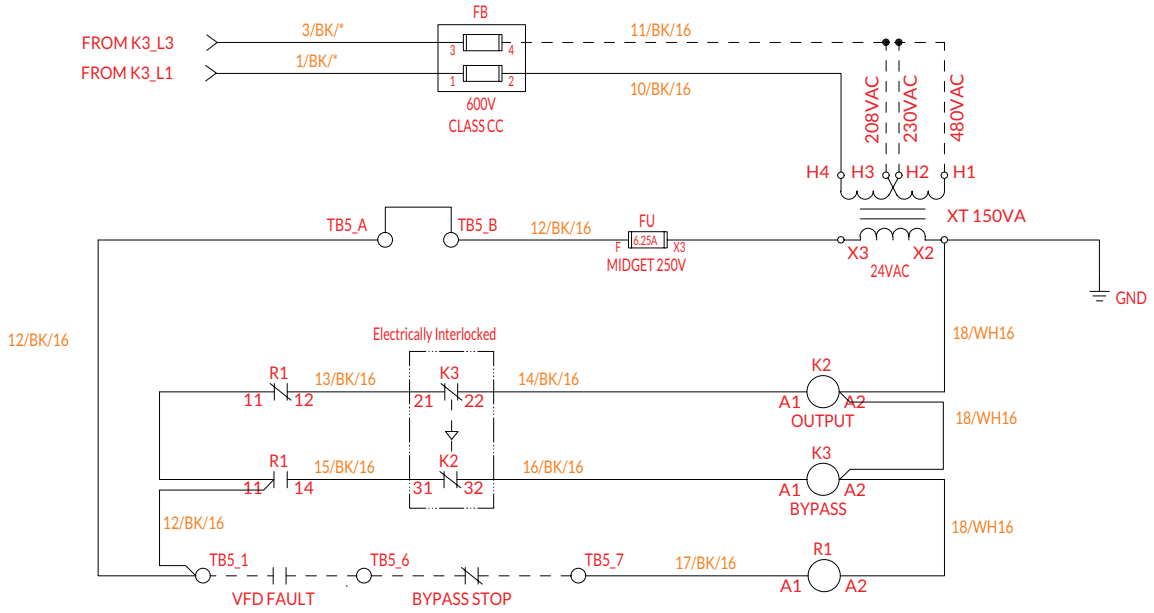

3 Contactor Bypass Control Circuit without Local Bypass Control

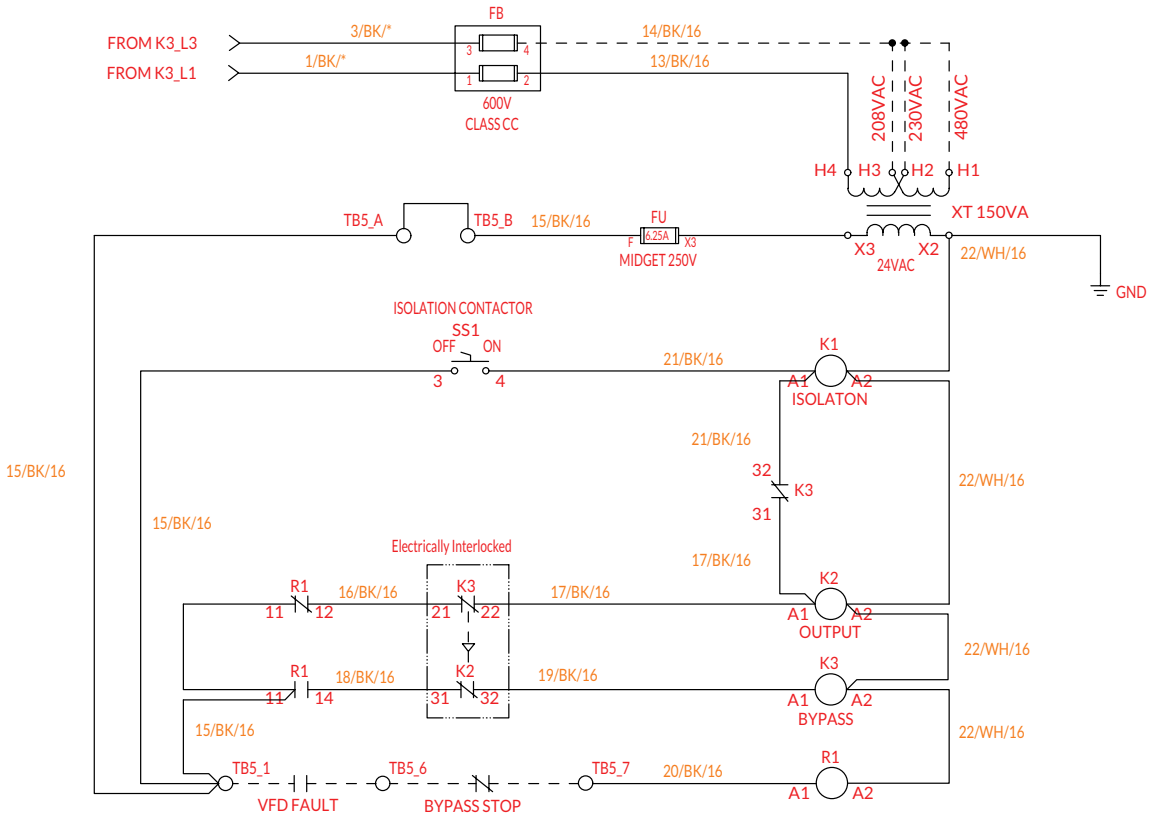

2 Contactor Bypass Control Circuit with Local Bypass Control

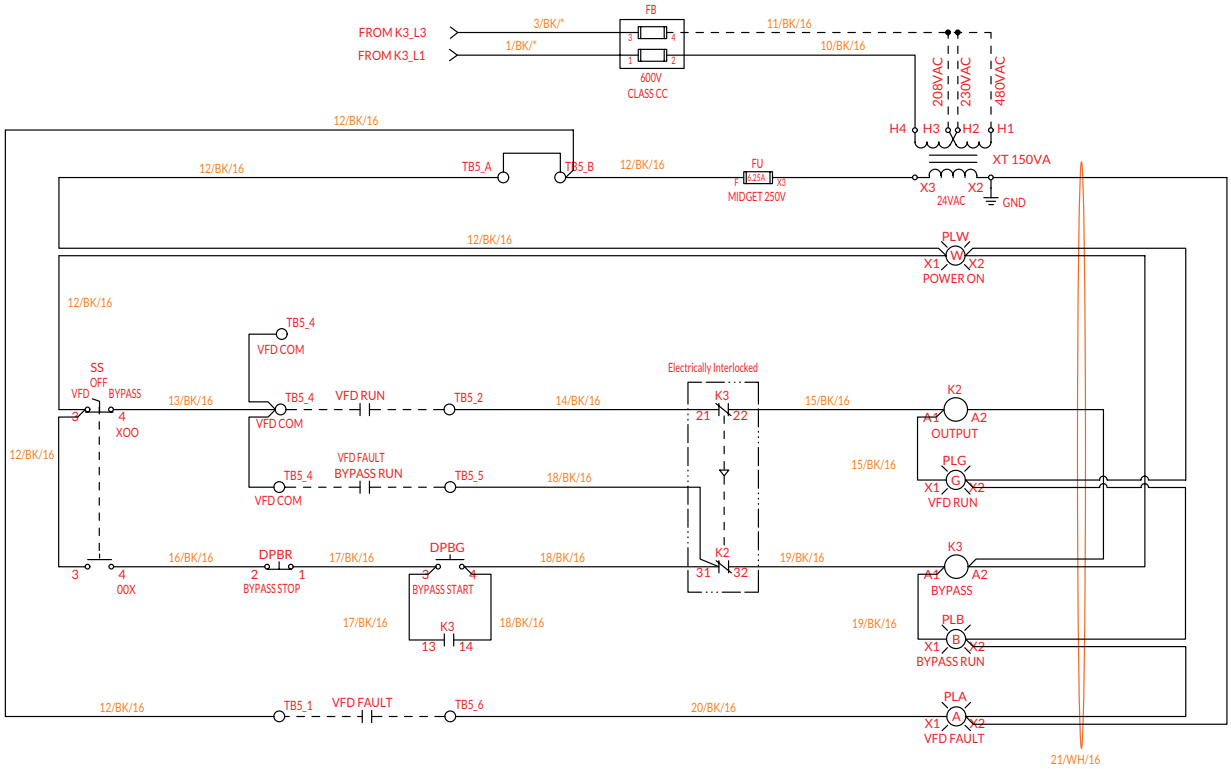

3 Contactor Bypass Control Circuit with Local Bypass Control

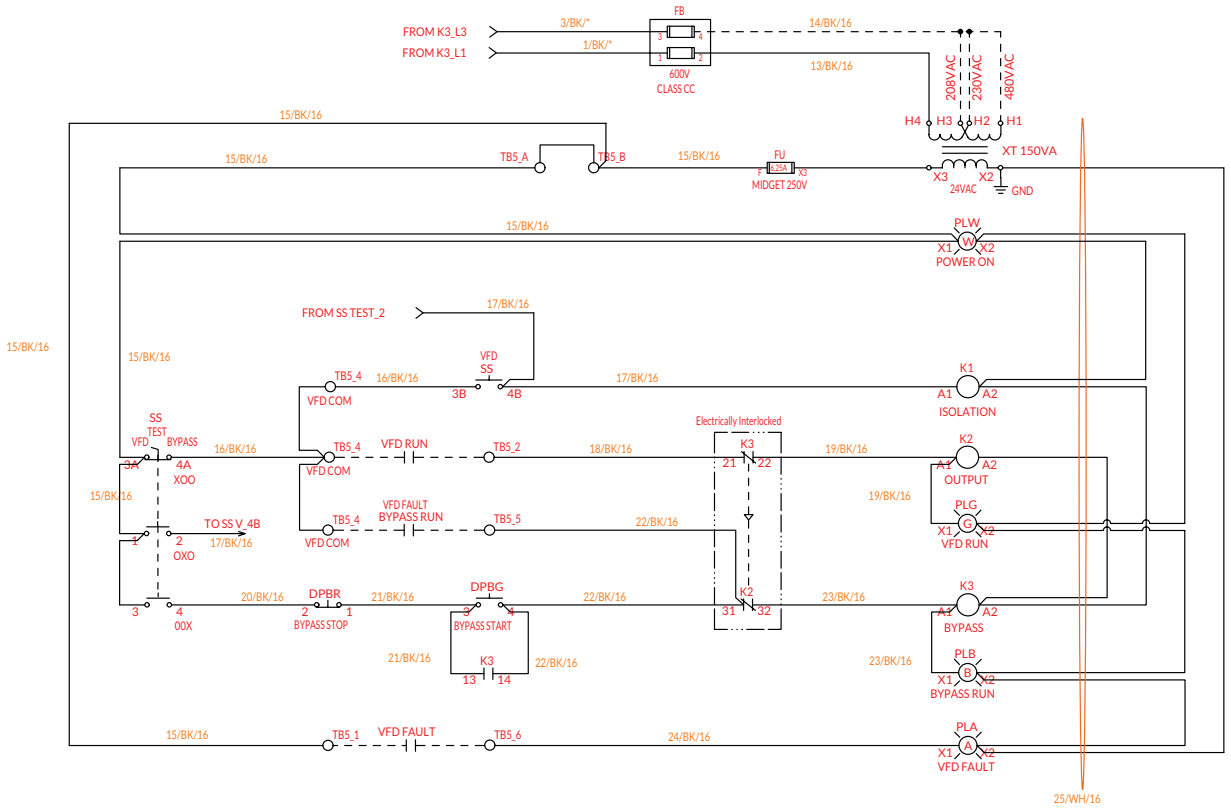

DIMENSIONS /

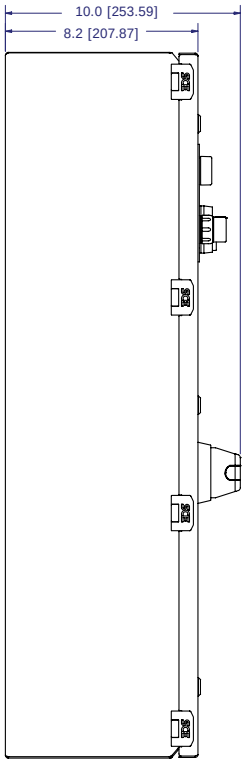

LEFT SIDE VIEW
SCALE 3/8

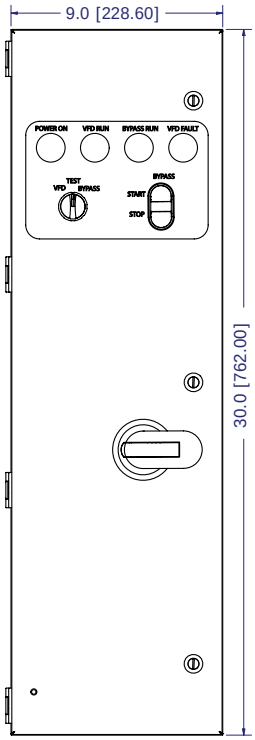

FRONT VIEW
SCALE 3/8

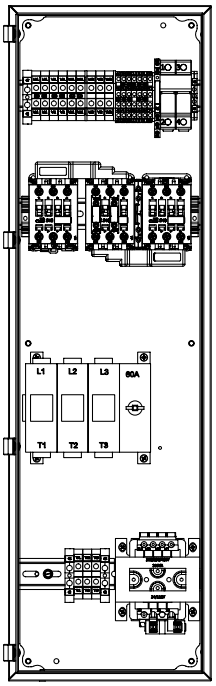

FRONT VIEW (COVER OFF)
SCALE 3/8

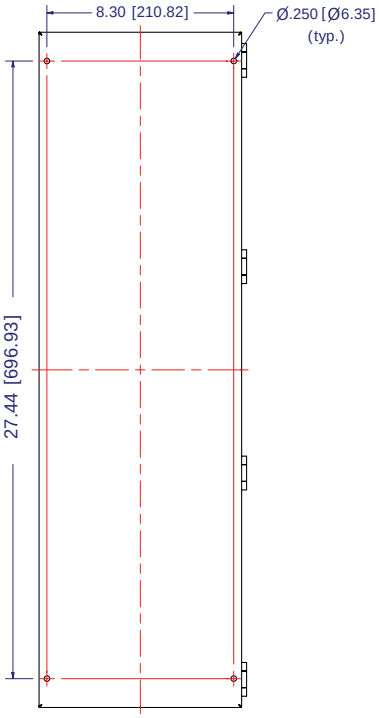

BACK VIEW
SCALE 3/8

WIRING DUCT

series WD

c3controls Series WD Wiring Duct will optimize your wire/cable management and installation. The wide variety of types and options will increase your wiring productivity, reduce installation costs, and will give you the most attractive and organized control panels in the industry!

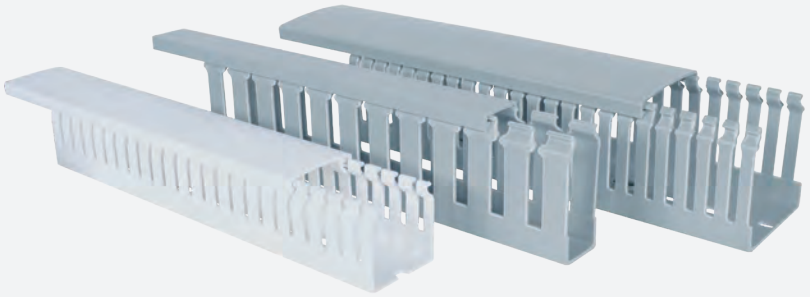

NOTE: 2 METER WIRE DUCT DOES NOT QUALIFY FOR FREE SHIPPING.
CONSULT FACTORY FOR AVAILABLE SHIPPING OPTIONS.

Section 28

Narrow Slot	4
Wide Slot	5
Replacement Components	8
Specifications	9
Dimensions	10
Wire Fill Capacity	11

PROVEN

Conformity to Standards:
UL 1565
CSA C22.2 No. 18.5-02
IEC 61084-2-1

Certifications:
UL File #: E330184 (Guide Z0DZ2, Z0DZ8)

CE Marked (per EU Low Voltage Directive 2006/95/EC and RoHS Directive 2011/65/EU)

Visit www.c3controls.com to download product certifications.

NOTE: The scope (range, description, price, specifications, dimensions, etc.) of the product featured in this section is subject to change without notice. Refer to www.c3controls.com for product updates.

WIRING DUCT

Every product in our portfolio is designed and manufactured to meet the needs of the machine builder, including our rugged line of Wiring Duct. Check out all the features of our Series WD below!

SLEEK AND DURABLE WIRE DUCT FOR SUPERIOR PERFORMANCE IN ANY ENVIRONMENT.	
✓ **Proven**	Our Wire Duct and covers are UL Listed and CE marked, and RoHS compliant for global acceptance.
✓ **Environmentally Secure**	Non-flammable (UL94 V-0), rigid PVC won't warp, peel, chip, crack, or become brittle, and resists oil, salt solutions, and fungus for superior performance in any environment.
✓ **Simple Installation**	Mounting hole patterns with elongated slots comply with DIN 43659 for global installation flexibility.
✓ **Vibration Resistant**	Restricted slot design ensures that wires are held in place, even when the cover is not installed, allowing for durable performance in high vibration applications.
✓ **Mounting Inserts Accepted**	Embossed mounting holes accept mounting inserts for installing smaller wiring duct inside larger wiring duct. Mounting inserts can be installed even after the wiring duct is secured to the panel, making it easy and saving you installation time.
✓ **Sleek Design**	Flush side-wall and duct provide increased wire capacity and a pleasing, finished look.
✓ **Easy Identification**	Complete catalog number and dimensions printed on the side of the duct for quick identification and utilization.
✓ **Safe Handling**	Smooth, rounded edges on duct fingers and covers prevent cutting and abrasions to hands and wires.
✓ **Limited Lifetime Warranty***	Every product is backed by our limited lifetime warranty—unmatched in the industry—bringing you quality components that perform in the most demanding applications.
✓ **Guaranteed Same-Day Shipping***	Product availability reduces inventory, and improves cash-flow—saving you money. With c3controls any order for standard catalog items received by 6:00pm ET is guaranteed to ship same-day.
✓ **Advantage Pricing**	Our approach to product development, manufacturing, and focus on servicing the OEM and Electrical Equipment Builder reduces cost. The result—the best value in the industry.

*See c3controls Terms & Conditions

> *Like us, c3controls has great people—their customer service representatives are personable and knowledgeable, and I've always remained friends with my sales representative over the years since we began working with c3controls.*

Dave Welch, President • **Welch Engineering**

Narrow Slot

Wide Slot

Wiring Duct Covers

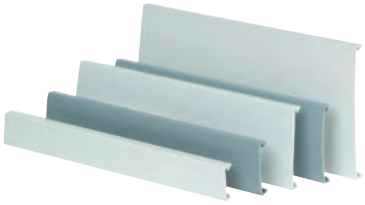

UNIQUE PRODUCT LINE FEATURES

OPTIONAL ADHESIVE BACKING

Put an end to all the eyeballing with c3controls' optional adhesive. It's an ideal convenience feature that allows you to *temporarily* stick your wiring duct where you want it on the panel before you *permanently* mount it. Just position, press, *then* drill and tap. Now that's convenient.

CONVENIENCE

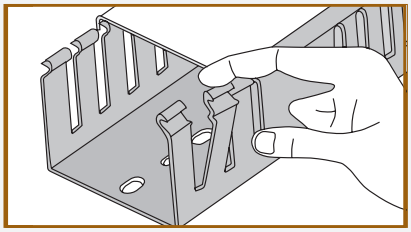

Snap-off, side wall fingers are scored to easily enlarge slots for any size wire or wire bundle. No tool is required to "snap off" fingers, and scoring ensures clean break-offs, eliminating sharp edges.

FAST WIRE ORGANIZATION

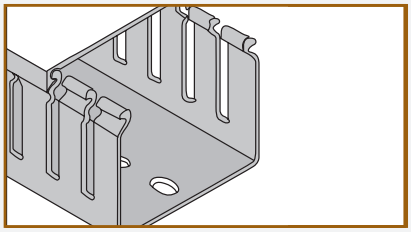

The V-shaped slot lead-in makes wire insertion fast and easy.

NON-SLIP COVER

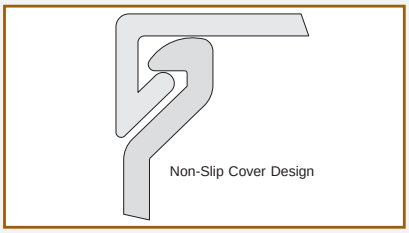

Interlocking, non-slip cover with two contact points prevents the cover from sliding, even in high vibration applications—and ensures a rigid duct assembly.

CUSTOMIZATION

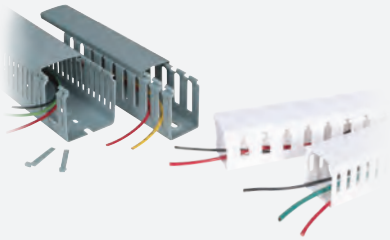

Two slot types are available to meet your capacity and flexibility needs: Narrow Slot for more precise wiring and Wide Slot for larger wires and bundles.

FIND IT FAST

Wiring Duct

- Certifications
- Specifications
- Dimension Drawings
- Installation Instructions
- Easy to Buy

www.c3controls.com

IT'S EASY TO BUILD YOUR OWN WIRING DUCT

Simply pick the code number from each of the sections below and combine them to build your part number.

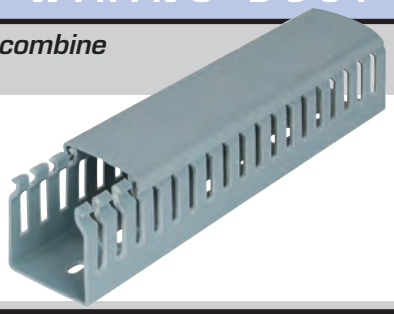

Narrow (Thin) Slot Wiring Duct

WD – B _____ N _____ – _____
I II III IV V VI

Example: To build one of our most popular Wiring Ducts, the part number would be **WD + B + III + N + V + VI** or **WD-B40X40N**

I. WIRING DUCT

CODE	DESCRIPTION
WD	Wiring Duct

II. WIRING DUCT TYPE

CODE	DESCRIPTION
B	Rigid, "U" Shaped Duct with Non-Slip Cover

III. DIMENSION

CODE	DIMENSIONS IN MM (WIDTH X HEIGHT), LENGTH: 2 METERS	DIMENSIONS IN INCHES (WIDTH X HEIGHT), LENGTH: 6'-6.75"	STANDARD PACKAGE QTY.*	LIST/PC.
25X30	25 x 30	0.98 x 1.18	36	$ 26.00
25X40	25 x 40	0.98 x 1.57	36	$ 32.00
25X60	25 x 60	0.98 x 2.36	18	$ 35.00
25X80	25 x 80	0.98 x 3.15	18	$ 43.00
25X100	25 x 100	0.98 x 3.94	18	$ 50.00
40X40	40 x 40	1.57 x 1.57	18	$ 36.00
40X60	40 x 60	1.57 x 2.36	18	$ 39.00
40X80	40 x 80	1.57 x 3.15	18	$ 47.00
40X100	40 x 100	1.57 x 3.94	12	$ 54.00
60X60	60 x 60	2.36 x 2.36	12	$ 48.00
60X80	60 x 80	2.36 x 3.15	12	$ 59.00
60X100	60 x 100	2.36 x 3.94	8	$ 67.00
80X80	80 x 80	3.15 x 3.15	12	$ 61.00

*NOTE: Smaller package quantities are available. A $10.00 handling fee applies for each part number. Consult factory for details.

IV. SLOT TYPE

CODE	DESCRIPTION	DIMENSIONS
N	Narrow (Thin)	See Figure 1N on page 11

V. COLOR

CODE	COLOR
(Blank)	Grey
WH	White

VI. ADHESIVE BACK*

CODE	DESCRIPTION	LIST/PC.
(Blank)	No Adhesive Back	—
A	Adhesive Back for 25mm Wide	$ 3.80
A	Adhesive Back for 40mm & 60mm Wide	$ 7.40
A	Adhesive Back for 80mm Wide	$ 11.00

*NOTE: Surface MUST be clean and dry—free of dirt, grease, oil, water, etc.—before applying Adhesive Backed Wiring Duct.

DISCOUNT SCHEDULE G

NOTE: 2 METER WIRE DUCT DOES NOT QUALIFY FOR FREE SHIPPING. CONSULT FACTORY FOR AVAILABLE SHIPPING OPTIONS.

Some of Our Popular Configurations:

WIRING DUCT—NARROW (THIN) SLOT

CATALOG NUMBER	DESCRIPTION	LIST/PC.
WD-B25X60N	Wiring Duct & Cover, W: 25mm (0.98") x H: 60mm (2.36"), Narrow (Thin) Slot, Grey	$ 35.00
WD-B40X60N	Wiring Duct & Cover, W: 40mm (1.57") x H: 60mm (2.36"), Narrow (Thin) Slot, Grey	$ 39.00
WD-B40X80N	Wiring Duct & Cover, W: 40mm (1.57") x H: 80mm (3.15"), Narrow (Thin) Slot, Grey	$ 47.00
WD-B60X80N	Wiring Duct & Cover, W: 60mm (2.36") x H: 80mm (3.15"), Narrow (Thin) Slot, Grey	$ 59.00
WD-B25X60NWH	Wiring Duct & Cover, W: 25mm (0.98") x H: 60mm (2.36"), Narrow (Thin) Slot, White	$ 35.00
WD-B40X60NWH	Wiring Duct & Cover, W: 40mm (1.57") x H: 60mm (2.36"), Narrow (Thin) Slot, White	$ 39.00
WD-B40X80NWH	Wiring Duct & Cover, W: 40mm (1.57") x H: 80mm (3.15"), Narrow (Thin) Slot, White	$ 47.00
WD-B25X60N-A	Wiring Duct & Cover, W: 25mm (0.98") x H: 60mm (2.36"), Narrow (Thin) Slot, Grey w/Adhesive Backing	$ 38.80
WD-B60X80N-A	Wiring Duct & Cover, W: 60mm (2.36") x H: 80mm (3.15"), Narrow (Thin) Slot, Grey w/Adhesive Backing	$ 66.40

IT'S EASY TO BUILD YOUR OWN WIRING DUCT

Simply pick the code number from each of the sections below and combine them to build your part number.

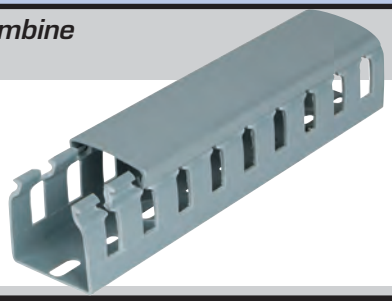

Wide (Standard) Slot Wiring Duct

WD – B _____ W _____ – _____
I II III IV V VI

Example: To build one of our most popular Wiring Ducts, the part number would be
WD + B + III + W + V + VI or **WD-B40X40W**

I. WIRING DUCT

CODE	DESCRIPTION
WD	Wiring Duct

II. WIRING DUCT TYPE

CODE	DESCRIPTION
B	Rigid, "U" Shaped Duct with Non-Slip Cover

III. DIMENSION

CODE	DIMENSIONS IN MM (WIDTH X HEIGHT), LENGTH: 2 METERS	DIMENSIONS IN INCHES (WIDTH X HEIGHT), LENGTH: 6'-6.75"	STANDARD PACKAGE QTY.*	LIST/PC.
25X30	25 x 30	0.98 x 1.18	36	$ 26.00
25X40	25 x 40	0.98 x 1.57	36	$ 32.00
25X60	25 x 60	0.98 x 2.36	18	$ 35.00
25X80	25 x 80	0.98 x 3.15	18	$ 43.00
25X100	25 x 100	0.98 x 3.94	18	$ 50.00
40X40	40 x 40	1.57 x 1.57	18	$ 36.00
40X60	40 x 60	1.57 x 2.36	18	$ 39.00
40X80	40 x 80	1.57 x 3.15	18	$ 47.00
40X100	40 x 100	1.57 x 3.94	12	$ 54.00
60X60	60 x 60	2.36 x 2.36	12	$ 48.00
60X80	60 x 80	2.36 x 3.15	12	$ 59.00
60X100	60 x 100	2.36 x 3.94	8	$ 67.00
80X80	80 x 80	3.15 x 3.15	12	$ 61.00

*NOTE: Smaller package quantities are available. A $10.00 handling fee applies for each part number. Consult factory for details.

IV. SLOT TYPE

CODE	DESCRIPTION	DIMENSIONS
W	Wide (Standard)	See Figure 1W on page 11

V. COLOR

CODE	COLOR
(Blank)	Grey
WH	White

VI. ADHESIVE BACK*

CODE	DESCRIPTION	LIST/PC.
(Blank)	No Adhesive Back	—
A	Adhesive Back for 25mm Wide	$ 3.80
A	Adhesive Back for 40mm & 60mm Wide	$ 7.40
A	Adhesive Back for 80mm Wide	$ 11.00

*NOTE: Surface MUST be clean and dry—free of dirt, grease, oil, water, etc.—before applying Adhesive Backed Wiring Duct.

DISCOUNT SCHEDULE G

NOTE: 2 METER WIRE DUCT DOES NOT QUALIFY FOR FREE SHIPPING. CONSULT FACTORY FOR AVAILABLE SHIPPING OPTIONS.

Some of Our Popular Configurations:

WIRING DUCT—WIDE (STANDARD) SLOT

CATALOG NUMBER	DESCRIPTION	LIST/PC.
WD-B25X60W	Wiring Duct & Cover, W: 25mm (0.98") x H: 60mm (2.36"), Wide (Standard) Slot, Grey	$ 35.00
WD-B40X60W	Wiring Duct & Cover, W: 40mm (1.57") x H: 60mm (2.36"), Wide (Standard) Slot, Grey	$ 39.00
WD-B40X80W	Wiring Duct & Cover, W: 40mm (1.57") x H: 80mm (3.15"), Wide (Standard) Slot, Grey	$ 47.00
WD-B60X80W	Wiring Duct & Cover, W: 60mm (2.36") x H: 80mm (3.15"), Wide (Standard) Slot, Grey	$ 59.00
WD-B25X60WWH	Wiring Duct & Cover, W: 25mm (0.98") x H: 60mm (2.36"), Wide (Standard) Slot, White	$ 35.00
WD-B40X60WWH	Wiring Duct & Cover, W: 40mm (1.57") x H: 60mm (2.36"), Wide (Standard) Slot, White	$ 39.00
WD-B40X80WWH	Wiring Duct & Cover, W: 40mm (1.57") x H: 80mm (3.15"), Wide (Standard) Slot, White	$ 47.00
WD-B25X60W-A	Wiring Duct & Cover, W: 25mm (0.98") x H: 60mm (2.36"), Wide (Standard) Slot, Grey w/Adhesive Backing	$ 38.80
WD-B60X80W-A	Wiring Duct & Cover, W: 60mm (2.36") x H: 80mm (3.15"), Wide (Standard) Slot, Grey w/Adhesive Backing	$ 66.40

Wiring Duct

c3controls Series WD Wiring Duct includes a wide variety of types and options to simplify and optimize your wire/cable management and installation. By using all of the features of the Series WD Wiring Duct, you'll increase your wiring productivity, reduce installation costs, and end up with the most organized and attractive control panels the industry has to offer.

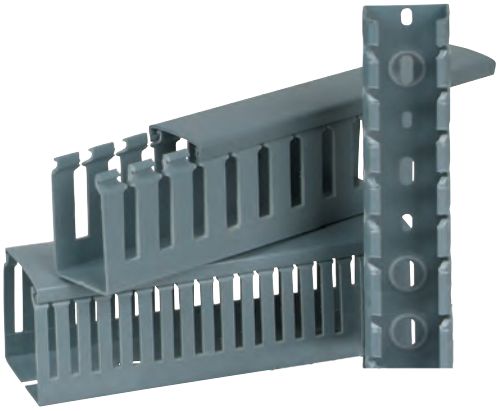

Wiring duct and covers are constructed of rigid, non-flammable (UL94 V-0), polyvinylchloride (PVC) and are RoHS compliant. They're also UL approved and CE marked for global compliance.

Just take a look at the Series WD Wiring Duct to see what it has to offer, and how you might realize the benefits of it in combination with our other outstanding wiring products like Series WTB2 IEC Terminal Blocks, featured in Section 22.

Product features include:

- cURus, CE Marked, and RoHS compliant.
- Wiring duct (and covers) are available in both grey and white to compliment your control panel design and match your company "look and feel."

Optional Adhesive Backing.
Convenient. Accurate. Fast.

We've all been there: you measure once, twice, then tap holes to mount a wire duct in your panel and discover you didn't position the holes accurately. Whether they're off by a mile or just a hair, it's a pain.

Put an end to all the eyeballing with c3controls' optional adhesive. It's an ideal convenience feature that allows you to *temporarily* stick your wiring duct where you want it on the panel before you *permanently* mount it. Just position, press, *then* drill and tap. Now that's convenient.

UNIQUE PRODUCT FEATURES

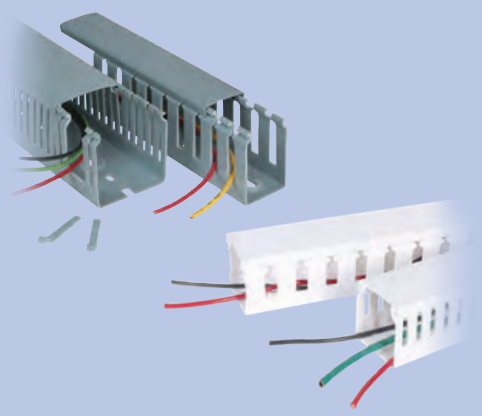

1. V-shaped slot lead-in makes wire insertion fast and easy.
2. Snap-off, side wall fingers are scored to easily enlarge slots for any size wire or wire bundle. Scoring ensures clean break-offs, eliminating sharp edges that can damage wire insulation and abrasions to hands. No tool is required to "snap-off" fingers.
3. Two slot types are available to meet your capacity and flexibility needs, and accept almost any size wire or wire bundle:
   - ***Narrow Slot*** – smaller fingers for more precise wiring
   - ***Wide Slot*** – larger slots for bigger wires and bundles
4. Interlocking, non-slip cover with two contact points prevents the cover from sliding, even in high vibration applications – and ensures a rigid duct assembly.
5. Smooth, rounded edges on duct fingers and covers prevent cutting and abrasions to hands and wires.
6. Flush side-wall and duct provide increased wire capacity and a pleasing, finished look.
7. Restricted slot design ensures that wires are held in place, even when the cover is not installed.
8. Embossed mounting holes accept mounting inserts for installing smaller wiring duct inside larger wiring duct. Mounting inserts can be installed even after the wiring duct is secured to the panel.
9. Mounting hole patterns with elongated slots comply with DIN 43659 for global installation flexibility.
10. Non-flammable (UL94 V-0), rigid PVC won't warp, peel, chip, crack, or become brittle, and resists oil, salt solutions, and fungus for superior performance in even the most demanding industrial environments.
11. Wide variety of sizes to meet your wiring capacity needs:
    - Widths from 25mm (0.98") to 80mm (3.15")
    - Heights from 30mm (1.18") to 100mm (3.94")
    - Up to 21 width/height combinations in each slot type

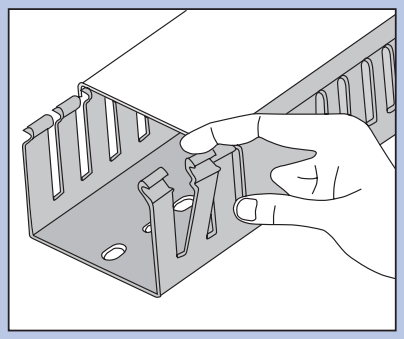

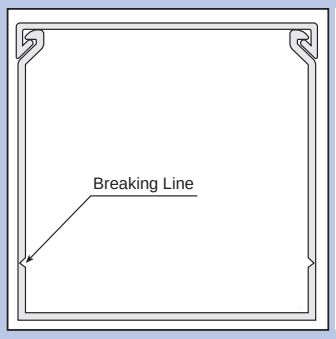

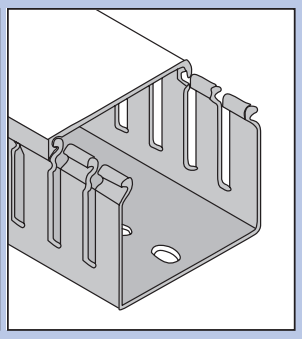

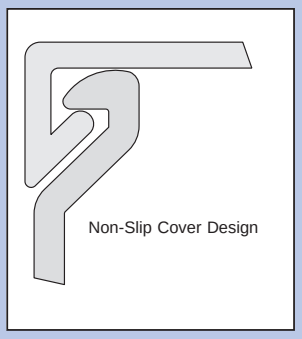

IT'S EASY TO BUILD YOUR OWN WIRING DUCT COVER

Simply pick the code number from each of the sections below and combine them to build your part number.

Wiring Duct Covers

WD – B C _____ _____
I II III IV V

Example: To build one of our most popular Wiring Duct Covers, the part number would be **WD + B + C + IV + V** or **WD-BC40WH**

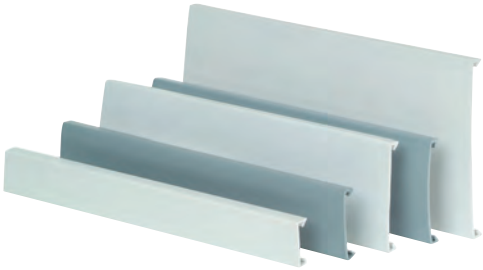

NOTE: Wiring Duct Covers are provided and included as standard in the Wiring Duct catalog numbers (and list price) configured on pages 4 & 5. Separate covers should be purchased for replacement only.

I. WIRING DUCT

CODE	DESCRIPTION
WD	Wiring Duct

II. WIRING DUCT TYPE

CODE	DESCRIPTION
B	Rigid, "U" Shaped Duct with Non-Slip Cover

III. COVER

CODE	DESCRIPTION
C	Non-Slip Cover for Rigid, "U" Shaped Duct

IV. DIMENSION

CODE	DIMENSIONS IN MM (WIDTH) LENGTH: 2 METERS	DIMENSIONS IN INCHES (WIDTH) LENGTH: 6'-6.75"	FOR USE WITH DUCT DIMENSION CODES	LIST
25	25	0.98	25X30	$12.00
			25X40	
			25X60	
			25X80	
			25X100	
40	40	1.57	40X40	$15.20
			40X60	
			40X80	
			40X100	
60	60	2.36	60X40	$16.20
			60X60	
			60X80	
			60X100	
80	80	3.15	80X80	$23.75

V. COLOR

CODE	COLOR
(Blank)	Grey
WH	White

DISCOUNT SCHEDULE **G**

NOTE: 2 METER WIRE DUCT AND WIRE DUCT COVERS DO NOT QUALIFY FOR FREE SHIPPING. CONSULT FACTORY FOR AVAILABLE SHIPPING OPTIONS.

SPECIFICATIONS:

WIRING DUCT SPECIFICATIONS			
GENERAL			
	UNITS		
MATERIALS		Rigid, Self-Extinguishing PVC	
RoHS COMPLIANCE		For RoHS Compliance documentation by product, refer to www.c3controls.com	
CONTINUOUS USE TEMPERATURE	°F / °C	+5 to +140 / -15 to +60	
FLAMMABILITY		UL94 V-0	
STANDARD WIRING DUCT AND COVER LENGTH		2 meters (6'-6.75")	
STANDARD UNIT		Wiring Duct complete with Cover	
MATERIAL PROPERTY			
	UNITS	**STANDARD**	**VALUE**
Tensile Strength at Break	kg/cm^2	ASTM D838	>390
Tensile Modulus	kg/cm^2	ASTM D638	13,500
Flexural Strength	kg/cm^2	ASTM D790	550
Compressive Strength	kg/cm^2	ASTM D695	1190
Izod Impact Strength	kg-cm/cm	ASTM D256	7.0
Hardness - Shore D	—	ASTM D2240	75-80
HDT at 4.6 kg/cm^2	°C	ASTM D648	85
Vicat Softening Point at 5 kg Load	°C	ASTM D1525	85
Co-efficient of Linear Thermal Expansion	°C	ASTM D696	4.6×10^{-5}
Flammability	—	UL94	V-0
Glow Wire Test (2mm)	°C	IEC 695-2-1	960
Limiting Oxygen Index	%	ASTM D2863	48.0
Specific Gravity	—	ASTM D792	1.48
Water Absorption	%	ASTM D570	0.05
Power Factor	—	ASTM D150	0.018
Dielectric Constant	—	ASTM D150	2.5
Dielectric Strength	kV/mm	ASTM D149	13
Surface Resistivity	Ohm	ASTM D257	1.29×10^{15}
Volume Resistivity	Ohm-cm	ASTM D257	3.21×10^{16}
Lead Content	ppm	Directive 2002/95/EC (IEC 61321)	<500
Cadmium Content	ppm		<50

WIRING DUCT AND COVER

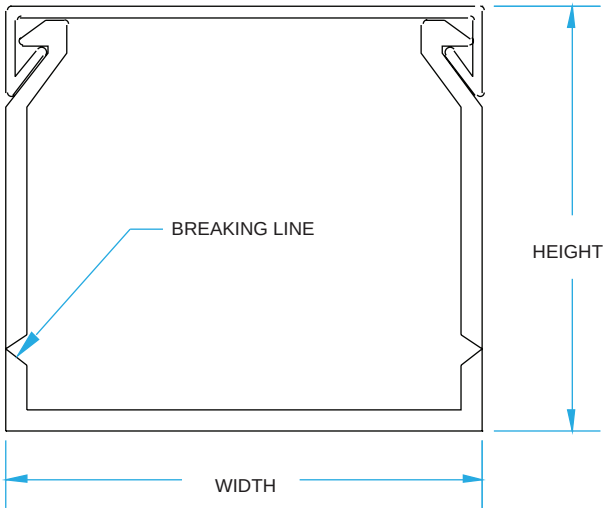

WIRING DUCT AND COVER DIMENSIONS

DIMENSION CODE	WIDTH (MM)	HEIGHT (MM)	WIDTH (INCHES)	HEIGHT (INCHES)
25X30	25	30	0.98	1.18
25X40	25	40	0.98	1.57
25X60	25	60	0.98	2.36
25X80	25	80	0.98	3.15
25X100	25	100	0.98	3.94
40X40	40	40	1.57	1.57
40X60	40	60	1.57	2.36
40X80	40	80	1.57	3.15
40X100	40	100	1.57	3.94
60X60	60	60	2.36	2.36
60X80	60	80	2.36	3.15
60X100	60	100	2.36	3.94
80X80	80	80	3.15	3.15

SLOTS

Figure 1N
Narrow (thin) Slot

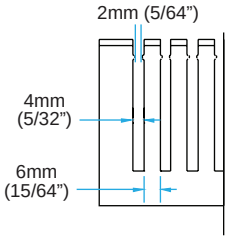

Figure 1W
Wide (Standard) Slot

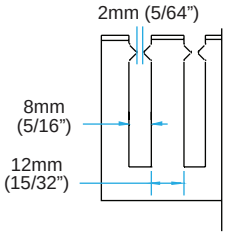

MOUNTING PATTERNS

DUCT WIDTH: 25mm

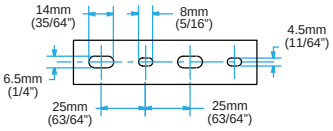

DUCT WIDTH: 40mm and 60mm

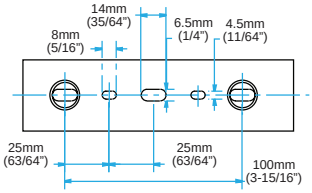

DUCT WIDTH: 80mm

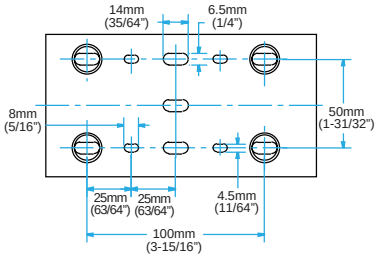

Formula for calculating Fill Capacity:

$$\text{Number of wires} = \frac{\text{Duct W x H}}{1.75 \times (\text{Wire O.D.})^2} \Big/ 2$$

Note: Wire fill is based on 50% fill of duct area.

WIRE FILL CAPACITY FOR ELECTRICAL CONDUCTORS

							ELECTRICAL CONDUCTORS											
	NOMINAL DUCT SIZE			NOMINAL DUCT SIZE			22 AWG	18 AWG		16 AWG		14 AWG			12 AWG		10 AWG	8 AWG
							0.065	0.113	0.084	0.125	0.096	0.165	0.139	0.105	0.158	0.122	0.153	0.216
DIMENSION CODE	WIDTH (MM)	HEIGHT (MM)	AREA (MM²)	WIDTH (IN.)	HEIGHT (IN.)	AREA (IN²)	MTW	MTW	THHN	MTW	THHN	MTW	MTW	THHN	MTW	THHN	THHN	THHN
25X30	25	30	750	0.98	1.18	1.16	78	26	47	21	36	12	17	30	13	22	14	7
25X40	25	40	1,000	0.98	1.57	1.54	104	34	62	28	48	16	23	40	18	30	19	9
25X60	25	60	1,500	0.98	2.36	2.31	156	52	94	42	72	24	34	60	26	44	28	14
25X80	25	80	2,000	0.98	3.15	3.09	209	69	125	57	96	32	46	80	35	59	38	19
25X100	25	100	2,500	0.98	3.94	3.86	261	86	156	71	120	41	57	100	44	74	47	24
40X40	40	40	1,600	1.57	1.57	2.46	166	55	100	45	76	26	36	64	28	47	30	15
40X60	40	60	2,400	1.57	2.36	3.71	251	83	150	68	115	39	55	96	42	71	45	23
40X80	40	80	3,200	1.57	3.15	4.95	335	111	200	91	153	52	73	128	57	95	60	30
40X100	40	100	4,000	1.57	3.94	6.19	419	139	251	113	192	65	92	160	71	119	76	38
60X60	60	60	3,600	2.36	2.36	5.57	377	125	226	102	173	58	82	144	64	107	68	34
60X80	60	80	4,800	2.36	3.15	7.43	502	166	301	136	230	78	110	193	85	143	91	46
60X100	60	100	6,000	2.36	3.94	9.30	629	208	377	170	288	98	138	241	106	179	114	57
80X80	80	80	6,400	3.15	3.15	9.92	671	222	402	181	308	104	147	257	114	190	121	61

WIRE FILL CAPACITY FOR DATA CABLE

							DATA CABLE		
	NOMINAL DUCT SIZE			NOMINAL DUCT SIZE			24 AWG		
							0.217	0.25	0.422
DIMENSION CODE	WIDTH (MM)	HEIGHT (MM)	AREA (MM²)	WIDTH (IN.)	HEIGHT (IN.)	AREA (IN²)	UPM/CM CAT5E	CAT6	UTP/CM
25X30	25	30	750	0.98	1.18	1.16	7	5	2
25X40	25	40	1,000	0.98	1.57	1.54	9	7	2
25X60	25	60	1,500	0.98	2.36	2.31	14	11	4
25X80	25	80	2,000	0.98	3.15	3.09	19	14	5
25X100	25	100	2,500	0.98	3.94	3.86	23	18	6
40X40	40	40	1,600	1.57	1.57	2.46	15	11	4
40X60	40	60	2,400	1.57	2.36	3.71	23	17	6
40X80	40	80	3,200	1.57	3.15	4.95	30	23	8
40X100	40	100	4,000	1.57	3.94	6.19	38	28	10
60X60	60	60	3,600	2.36	2.36	5.57	34	25	9
60X80	60	80	4,800	2.36	3.15	7.43	45	34	12
60X100	60	100	6,000	2.36	3.94	9.30	56	43	15
80X80	80	80	6,400	3.15	3.15	9.92	60	45	16

TECHNICAL REFERENCE

Have a Technical question? Don't worry. Here in the c3controls Technical Reference section, you'll find all the information you need to help you make the right decision for your particular application. From enclosure ratings to hazardous location classifications to pilot duty rating codes, we've got it covered — all in a format that is easy to understand.

Section 38

Enclosure Ratings & Hazardous Location Classifications	2
Pilot Device Colors, Meanings and Functions	5
Pilot Duty Rating Codes	8
IEC Utilization Categories	9
Motor Full-Load Currents	10
Formulas & Conversion Factors	11
Electrical Symbols	12

ENCLOSURE TYPES NON-HAZARDOUS LOCATION			
Enclosure Rating	**NEMA** **National Electrical Manufacturers Association (NEMA Standard 250) and Electrical and Electronic Mfg. Association of Canada (EEMAC)**	**Underwriters Laboratories Inc. (UL50 and UL508)**	**Canadian Standards Association (Standard C22.2 No. 94)**
Type 1	Enclosures are intended for indoor use primarily to provide a degree of protection against contact with the enclosed equipment or locations where unusual service conditions do not exist.	Indoor use primarily to provide protection against contact with the enclosed equipment and against a limited amount of falling dust.	General purpose enclosure. Protects against accidental contact with live parts.
Type 3	Enclosures are intended for outdoor use primarily to provide a degree of protection against windblown dust, rain, and sleet; undamaged by the formation of ice on the enclosure.	Outdoor use to provide a degree of protection against windblown dust and windblown rain; undamaged by the formation of ice on the enclosure.	Indoor or outdoor use; provides a degree of protection against rain, snow, and windblown dust; undamaged by the external formation of ice on the enclosure.
Type 3R*	Enclosures are intended for outdoor use primarily to provide a degree of protection against falling rain and sleet; undamaged by the formation of ice on the enclosure.	Outdoor use to provide a degree of protection against falling rain; undamaged by the formation of ice on the enclosure.	Indoor or outdoor use; provides a degree of protection against rain and snow; undamaged by the external formation of ice on the enclosure.
Type 4	Enclosures are intended for indoor or outdoor use primarily to provide a degree of protection against windblown dust and rain, splashing water, and hose directed water; undamaged by the formation of ice on the enclosure.	Either indoor or outdoor use to provide a degree of protection against falling rain, splashing water, and hose-directed water; undamaged by the formation of ice on the enclosure.	Indoor or outdoor use; provides a degree of protection against rain, snow, windblown dust, splashing and hose-directed water; undamaged by the external formation of ice on the enclosure.
Type 4X	Enclosures are intended for indoor or outdoor use primarily to provide a degree of protection against corrosion, windblown dust and rain, splashing water, and hose-directed water; undamaged by the formation of ice on the enclosure.	Either indoor or outdoor use to provide a degree of protection against falling rain, splashing water, and hose-directed water; undamaged by the formation of ice on the enclosure; resists corrosion.	Indoor or outdoor use; provides a degree of protection against rain, snow, windblown dust, splashing and hose-directed water; undamaged by the external formation of ice on the enclosure; resists corrosion.
Type 6	Enclosures are intended for use indoors or outdoors where occasional submersion is encountered, limited depth, undamaged by the formation of ice on the enclosure.	Indoor or outdoor use to provide a degree of protection against entry of water during temporary submersion at a limited depth; undamaged by the external formation of ice on the enclosure.	Indoor or outdoor use; provides a degree of protection against the entry of water during temporary submersion at a limited depth. Undamaged by the external formation of ice on the enclosure; resists corrosion.
Type 12	Enclosures are intended for indoor use primarily to provide a degree of protection against dust, falling dirt, and dripping non-corrosive liquids.	Indoor use to provide a degree of protection against dust, dirt, fiber flyings, dripping water, and external condensation of non-corrosive liquids.	Indoor use; provides a degree of protection against circulating dust, lint, fibers, and flyings; dripping and light splashing of non-corrosive liquids; not provided with knockouts.
Type 12K	Enclosures with knockouts are intended for indoor use primarily to provide a degree of protection against dust, falling dirt, and dropping non-corrosive liquids.	Indoor use to provide a degree of protection against dust, dirt, fiber flyings, dripping water, and external condensation of non-corrosive liquids. Knockouts located in the top or bottom walls, or both.	Indoor use; provides a degree of protection against circulating dust, lint, fibers and flyings; dripping and light splashing of non-corrosive liquids; provided with knockouts.
Type 13	Enclosures are intended for indoor use primarily to provide a degree of protection against dust, spraying of water, oil, and non-corrosive coolant.	Indoor use to provide a degree of protection against lint, dust seepage, external condensation and spraying of water, oil, and non-corrosive liquids.	Indoor use; provides a degree of protection against circulating dust, lint, fibers, and flyings; seepage and spraying of non-corrosive liquids, including oils and coolants.

***NFPA 70 (National Electric Code) defines new Type 3RX as providing the same degree of protection as Type 3R, with the addition of protection against corrosive agents.**

Source: NEMA, UL and CSA Standards.

FIRST NUMERAL

Protection Against Ingress of Solid Objects			Protection of Persons Against Access to Hazardous Parts with:
IP	**Requirements**	**Example**	
0	No protection.		Non-Protected
1	Full penetration of 50mm diameter sphere not allowed. Contact with hazardous parts not permitted.		Back of Hand
2	Full penetration of 12.5mm diameter sphere not allowed. The jointed test finger shall have adequate clearance from hazardous parts.		Finger
3	The access probe of 2.5mm diameter shall not penetrate.		Tool
4	The access probe of 1.0mm diameter shall not penetrate.		Wire
5	Limited ingress of dust permitted (no harmful deposit).		Wire
6	Totally protected against ingress of dust.		Wire

ADDITIONAL LETTER (OPTIONAL)

Protection Against Ingress of Solid Objects			Protection of Persons Against Access to Hazardous Parts with:
IP	**Requirements**	**Example**	
A (For use with first numeral 0)	Penetration of 50mm diameter sphere up to barrier must not contact hazardous parts.		Back of Hand
B (For use with first numerals 0 and 1)	Test finger penetration to a maximum of 80mm must not contact hazardous parts.		Finger
C (For use with first numerals 1 and 2)	Wire of 2.5mm diameter x 10mm long must not contact hazardous parts when spherical stop face is partially entered.		Tool
D (For use with first numerals 2 and 3)	Wire of 1.0mm diameter x 100mm long must not contact hazardous parts when spherical stop face is partially entered.		Wire

SECOND NUMERAL

Protection Against Harmful Ingress of Water			Protection from Water:
IP	**Requirements**	**Example**	
0	No protection.		Non-Protected
1	Protected against vertically falling drops of water. Limited ingress permitted.		Vertically Dripping
2	Protected against vertically falling drops of water with enclosure tilted 15° from the vertical. Limited ingress permitted.		Dripping up to 15° from the Vertical
3	Protected against sprays to 60° from the vertical. Limited ingress permitted.		Limited Spraying
4	Protected against water splashed from all directions. Limited ingress permitted.		Splashing from all Directions
5	Protected against jets of water. Limited ingress permitted.		Hosing Jets from all Directions
6	Protected against strong jets of water. Limited ingress permitted.		Strong Hosing Jets from all Directions
7	Protected against the effects of immersion between 15cm and 1m.		Temporary Immersion
8	Protected against long periods of immersion under pressure.		Continuous Immersion

Source: ©International Electrotechnical Commission

NEMA ENCLOSURE TYPE RATINGS / IEC ENCLOSURE IP RATINGS

CONVERSION OF NEMA ENCLOSURE TYPE RATINGS TO IEC 60529 ENCLOSURE CLASSIFICATION DESIGNATIONS (IP) (CANNOT BE USED TO CONVERT IEC CLASSIFICATION DESIGNATIONS TO NEMA TYPE RATINGS)

IP FIRST CHARACTER	NEMA ENCLOSURE TYPE																										IP SECOND CHARACTER
	1		2		3		3R		3S		4		4X		5		6		6P		12		12K		13		
IP0_		■		■		■		■		■		■		■		■		■		■		■		■		■	IP_0
IP1_				■		■		■		■		■		■		■		■		■		■		■		■	IP_1
IP2_				■		■		■		■		■		■		■		■		■		■		■		■	IP_2
IP3_						■		■		■		■		■		■		■		■		■		■		■	IP_3
IP4_						■		■		■		■		■				■		■		■		■		■	IP_4
IP5_						■				■		■		■				■		■							IP_5
IP6_												■		■				■		■							IP_6
																		■		■							IP_7
																				■							IP_8
	A	B	A	B	A	B	A	B	A	B	A	B	A	B	A	B	A	B	A	B	A	B	A	B	A	B	

A = A shaded block in the "A" column indicates that the NEMA Enclosure Type exceeds the requirements for the respective IEC 60529 IP First Character Designation.
The IP First Character Designation is the protection against access to hazardous parts and solid foreign objects.
B = A shaded block in the "B" column indicates that the NEMA Enclosure Type exceeds the requirements for the respective IEC 60529 IP Second Character Designation.
The IP Second Character Designation is the protection against the ingress of water.

Examples of Table Use:
An IEC IP45 Enclosure Rating is specified. What NEMA Type Enclosures meet and exceed the IP45 rating?

Referencing the first character, 4, in the IP rating and the row designated "IP4_" in the leftmost column in the table; the blocks in Column "A" for NEMA Types 3, 3S, 4, 4X, 5, 6, 6P, 12, 12K and 13 are shaded. These NEMA ratings meet and exceed the IEC protection requirements against access to hazardous parts and solid foreign objects. Referencing the second character, 5, in the IP rating and the row designated "IP_5" in the rightmost column in the table; the blocks in Column "B" for NEMA Type 3, 3S, 4, 4X, 6 and 6P are shaded. These NEMA ratings meet and exceed the IEC requirements for protection against the ingress of water. The absence of shading in Column "B" beneath the "NEMA Enclosure Type 5" indicates that Type 5 does not meet the IP45 protection requirements against the ingress of water. Likewise, the absence of shading Column "B" for NEMA Type 12, 12K and 13 enclosures indicates that these enclosures do not meet the IP45 requirements for protection against the ingress of water. Only Type 3, 3S, 4, 4X, 6 and 6P have both Column "A" in the "IP4_" row and Column "B" in the "IP_5" row shaded and could be used in an IP45 application.

The NEMA Enclosure Type 3 not only meets the IP45 Enclosure Rating, but also exceeds the IEC requirements because the NEMA Type requires an outdoor corrosion test; a gasket aging test; a dust test; an external icing test; and no water penetration in the rain test. Slight differences exist between the IEC and NEMA test methods, but the IEC rating permits the penetration of water if "it does not deposit on insulation parts, or reach live parts." The IEC rating does not require a corrosion test; gasket aging test; dust test or external icing test. Because the NEMA ratings include additional test requirements, this table cannot be used to select IP Designations for NEMA rated enclosure specifications.

IEC 60529 specifies that an enclosure shall only be designated with a stated degree of protection indicated by the first characteristic numeral if it also complies with all lower degrees of protection. Furthermore, IEC 60529 states that an enclosure shall only be designated with a degree of protection indicated by the second characteristic numeral if it also complies with all lower degrees of protection up to and including the second characteristic numeral 6. An enclosure designated with a second characteristic numeral 7 or 8 only is considered unsuitable for exposure to water jets (designated by second characteristic numeral 5 or 6) and need not comply with requirements for numeral 5 or 6 unless it is dual coded. Since the IEC protection requirements become more stringent with increasing IP character value up through 6, once a NEMA Type rating meets the requirements for an IP designation up through 6, it will also meet the requirements for all lower IP designations. This is apparent from the shaded areas shown in the table.

Source: ©National Electrical Manufacturers Association

HAZARDOUS LOCATION CLASSIFICATIONS

SUMMARY OF CLASSIFICATION CHART

CLASS	DIVISION	GROUP
I. Gas	1. **Hazard May Exist** May exist in atmosphere under normal operating conditions.	A. Acetylene B. Hydrogen and Manufactured Gases Containing Hydrogen C. Petrochemicals (e.g. Ethylene) D. Petrochemicals (e.g. Alcohol)
	2. **Potential Hazard** A. May be present in atmosphere only under abnormal circumstances. B. Location adjacent to Division 1 location.	A. Acetylene B. Hydrogen and Manufactured Gases Containing Hydrogen C. Petrochemicals (e.g. Ethylene) D. Petrochemicals (e.g. Alcohol)
II. Dust	1. **Hazard May Exist** May exist in atmosphere under normal operating conditions.	E. Conductive and Combustible Dust (e.g., Aluminum, Magnesium) F. Carbonaceous Dust (e.g., Coal) G. Non-Conductive Combustible Dust (e.g., plastic, chemical, food, grain)
	2. **Potential Hazard** A. May be present in atmosphere only under abnormal circumstances.	
III. Fibers	1. **Production Areas**	Easily Ignitable Fibers or Flyings
	2. **Handling and Storage Areas**	Easily Ignitable Fibers or Flyings

PUSH BUTTON COLORS

COLOR-CODING FOR PUSH BUTTON ACTUATORS AND THEIR MEANINGS

COLOR	MEANING	EXPLANATION	EXAMPLES OF APPLICATION
RED	Emergency	Actuate in the event of a hazardous condition or emergency	Emergency Stop Initiation of emergency function
YELLOW	Abnormal	Actuate in the event of an abnormal condition	Intervention to suppress abnormal condition Intervention to restart an interrupted automatic cycle
GREEN	Normal	Actuate to initiate normal conditions	(See following table)
BLUE	Mandatory	Actuate for a condition requiring mandatory action	Reset function
WHITE	No specific meaning assigned	For general initiation of functions except for emergency stop (see note)	START/ON (preferred) STOP/OFF
GREY			START/ON STOP/OFF
BLACK			START/ON STOP/OFF (preferred)

NOTE: Where a supplemental means of coding (e.g. shape, position, texture) is used for the identification of push button actuators, then the same color WHITE, GREY, or BLACK may be used for various functions (e.g. WHITE for START/ON and for STOP/OFF actuators).

COLORS OF TYPICAL PUSH BUTTON OPERATORS, BY FUNCTION

ACTUATOR FUNCTION	SHALL BE USED	SHOULD BE USED	PREFERRED COLOR	PERMITTED COLOR	SHALL NOT BE USED
START/ON	—	White, Grey, or Black	White	Green	Red
Emergency Stop and Emergency Switching OFF	Red	—	—	—	—
STOP/OFF	—	Black, Grey, or White	Black	Red	Green
Push Button Actuators that alternately act as START/ON and STOP/OFF	—	—	White, Grey, or Black	—	Red, Yellow, or Green
Push Button Actuators that cause operation while they are actuated and cease the operation when they are released (ex. Hold-to-Run)	—	—	White, Grey, or Black	—	Red, Yellow, or Green
Reset Push Buttons	Blue, White, Grey, or Black	—	—	—	Green
Reset Push Buttons that also act as a STOP/OFF button	—	Blue, White, Grey, or Black	Black	—	Green

Source: IEC 60204-1, Safety of Machinery, Electrical Equipment of Machines, Part 1 General Rules

PUSH BUTTON COLORS

COLORS OF TYPICAL PUSH BUTTON OPERATORS, BY FUNCTION

ACTUATOR FUNCTION	SHALL BE USED	SHOULD BE USED	PREFERRED COLOR	PERMITTED COLOR	SHALL NOT BE USED
START/ON	—	—	Green	White, Grey, or Black	Red
Emergency Stop	Red	—	—	—	—
STOP/OFF	—	—	Red	White, Grey, or Black	Green
Push Button Actuators that alternately act as START/ON and STOP/OFF	White, Grey, or Black	—	—	—	Red, Yellow, or Green
Push Buttons used to respond to abnormal conditions	Yellow	—	—	—	—
Push Button Actuators that cause operation while they are actuated and cease the operation when they are released (ex. Jogging)	White, Grey, Blue, or Black	—	Black	—	—
Reset Push Buttons	Blue, White, Grey, or Black	—	—	—	Green
Reset Push Buttons that also act as a STOP/OFF button	Red	—	—	—	—

Source: NFPA 79 Electrical Standard for Industrial Machinery

INDICATOR LIGHT COLORS

Indicator lights and displays serve to give the following types of information:

- Indication – to attract the operator's attention or to indicate that a certain task should be performed. The colors RED, YELLOW, GREEN, and BLUE are normally used in this mode.
- Confirmation – to confirm a command, or a condition, or to confirm the termination of a change or transition period. The colors BLUE and WHITE are normally used in the mode and GREEN may be used in some cases.
- Unless otherwise agreed to between the supplier and user, indicator (pilot) light lenses shall be color-coded with respect to the condition (status) of the machine in accordance with the following table.

COLORS FOR INDICATOR LIGHTS AND THEIR MEANINGS WITH RESPECT TO THE CONDITION OF THE MACHINE

COLOR	MEANING	EXPLANATION	ACTION BY OPERATOR
RED	Emergency	Hazardous condition	Immediate action to deal with hazardous condition (e.g. by operating emergency stop)
YELLOW	Abnormal	Abnormal condition Impending critical condition	Monitoring and/or intervention (e.g. by re-establishing the intended function)
GREEN	Normal	Normal condition	Optional
BLUE	Mandatory	Indication of a condition that requires action by the operator	Mandatory action
WHITE	Neutral	Other conditions; may be used whenever doubt exists about the application of RED, YELLOW, GREEN, BLUE	Monitoring

NOTE: Alternative meanings to those defined in the preceding table may be assigned in accordance with one of the following criteria: the safety of persons and the environment, and the state of the electrical equipment.

Source: ©International Electrotechnical Commission

INDICATOR LIGHTS

MACHINE INDICATOR LIGHTS			
COLOR	**SAFETY OF PERSONS OR ENVIRONMENT**	**CONDITION OF PROCESS**	**STATE OF EQUIPMENT**
RED	Danger	Emergency	Faulty
YELLOW (AMBER)	Warning/Caution	Abnormal	Abnormal
GREEN	Safe	Normal	Normal
BLUE	Mandatory Action	Mandatory Action	Mandatory Action
CLEAR WHITE GREY BLACK	No specific meaning assigned	No specific meaning assigned	No specific meaning assigned

Source: NFPA 79 Electrical Standard for Industrial Machinery

CONDUCTOR COLORS

IEC 60204-1: COLORS OF CONDUCTORS, BY CONDUCTOR TYPE		
CONDUCTOR TYPE	**COLOR SHALL BE USED**	**RECOMMENDED COLOR**
Ground/Earth	GREEN and YELLOW	—
Neutral	LIGHT BLUE	—
AC and DC Power Circuits	—	BLACK
AC Control Circuits	—	RED
DC Control Circuits	—	BLUE
Interlock Control Circuits Supplied from an External Power Source	—	ORANGE

NOTE: Where color-coding is used for the identification of conductors, the following colors may be used: BLACK, BROWN, RED, ORANGE, YELLOW, GREEN, BLUE (including LIGHT BLUE), VIOLET, GREY, WHITE, PINK, and TURQUOISE.

Source: IEC 60204-1, Safety of Machinery, Electrical Equipment of Machines, Part 1 General Rules

NFPA 79: COLORS OF CONDUCTORS, BY CONDUCTOR TYPE	
CONDUCTOR TYPE	**COLOR**
Ground (protective bonding)/Earth	GREEN with or without one or more YELLOW stripes
AC Circuit with a grounded conductor	WHITE, GREY or three continuous WHITE stripes on other than GREEN, BLUE, ORANGE, or YELLOW insulation
Grounded DC circuit conductor (current carrying)	WHITE with BLUE stripe
Grounded (current carrying) circuit conductor which remains energized when the main disconnecting means is in the OFF position	WHITE with ORANGE stripe or WHITE with YELLOW stripe
Ungrounded circuit conductors that remain energized when the supply disconnecting means is in the OFF position	ORANGE or YELLOW
Ungrounded line, load, and control conductors at line voltage	BLACK
Ungrounded AC control conductors at less than line voltage	RED
Ungrounded DC control conductors	BLUE

Source: NFPA 79 Electrical Standard for Industrial Machinery

PILOT DUTY RATING CODES

RATING CODES FOR AC CONTROL-CIRCUIT CONTACTS AT 50 AND 60 HERTZ

CONTACT RATING CODE DESIGNATION[a]	THERMAL CONTINUOUS TEST CURRENT AMPERES	MAXIMUM CURRENT, AMPERES[b]								MAXIMUM VOLT-AMPERES	
		120 VOLT		240 VOLT		480 VOLT		600 VOLT			
		MAKE	BREAK	MAKE	BREAK	MAKE	BREAK	MAKE	BREAK	MAKE	BREAK
A150	10	60	6.00	–	–	–	–	–	–	7200	720
A300	10	60	6.00	30	3.00	–	–	–	–	7200	720
A600	10	60	6.00	30	3.00	15	1.50	12	1.20	7200	720
B150	5	30	3.00	–	–	–	–	–	–	3600	360
B300	5	30	3.00	15	1.50	–	–	–	–	3600	360
B600	5	30	3.00	15	1.50	7.50	0.75	6	0.60	3600	360
C150	2.5	15	1.5	–	–	–	–	–	–	1800	180
C300	2.5	15	1.5	7.5	0.75	–	–	–	–	1800	180
C600	2.5	15	1.5	7.5	0.75	3.75	0.375	3.00	0.30	1800	180
D150	1.0	3.60	0.60	–	–	–	–	–	–	4.32	72
D300	1.0	3.60	0.60	1.80	0.30	–	–	–	–	4.32	72
E150	0.5	1.80	0.30	–	–	–	–	–	–	216	36

[a] The numerical suffix designates the maximum voltage design values, which are to be 600, 300, and 150 volts for suffixes 600, 300, and 150, respectively. The test voltage is to be 600, 240, or 120 volts.

[b] For maximum ratings at voltages between the maximum design value and 120 volts, the maximum make and break ratings are to be obtained by dividing the volt-amperes rating by the application voltage. For voltages below 120 volts, the maximum make current is to be the same as for 120 volts, and the maximum break current is to be obtained by dividing the break volt-amperes by the application voltage, but these currents are not to exceed the thermal continuous test current.

RATING CODES FOR DC CONTROL-CIRCUIT CONTACTS

CONTACT RATING CODE DESIGNATION[a]	THERMAL CONTINUOUS TEST CURRENT AMPERES	MAXIMUM MAKE OR BREAK[b] CURRENT, AMPERES			MAXIMUM MAKE OR BREAK VOLT-AMPERES AT 300 VOLTS OR LESS
		125 VOLT	250 VOLT	301 TO 600 VOLT	
N150	10	2.2	–	–	275
N300	10	2.2	1.1	–	275
N600	10	2.2	1.1	0.40	275
P150	5.0	1.1	–	–	138
P300	5.0	1.1	0.55	–	138
P600	5.0	1.1	0.55	0.20	138
Q150	2.5	0.55	–	–	69
Q300	2.5	0.55	0.27	–	69
Q600	2.5	0.55	0.27	0.10	69
R150	1.0	0.22	–	–	28
R300	1.0	0.22	0.11	–	28

[a] The numerical suffix designates the maximum voltage design values, which are to be 600, 300, and 150 volts for suffixes 600, 300, and 150, respectively. The test voltage is to be 600, 250, or 125 volts.

[b] For maximum ratings at 300 volts or less, the maximum make and break ratings are to be obtained by dividing the volt-ampere rating by the application voltage, but the current values are not to exceed the thermal continuous test current.

Source: Extracts from ©UL508 – Industrial Control Equipment, Seventeenth Edition

IEC UTILIZATION CATEGORIES

LOW VOLTAGE UTILIZATION CATEGORIES

NATURE OF CURRENT	CATEGORY	TYPICAL APPLICATIONS	RELEVANT IEC PRODUCT STANDARD
a.c.	AC-1	Non-inductive or slightly inductive loads, resistance furnaces.	60947-4
	AC-2	Slip-ring motors: starting, switching off.	
	AC-3	Squirrel-cage motors: starting, switching off motors during running.	
	AC-4	Squirrel-cage motors: starting, plugging[1], inching[2].	
	AC-5a	Switching of electric discharge lamp control.	
	AC-5b	Switching of incandescent lamps.	
	AC-6a	Switching of transformers.	
	AC-6b	Switching of capacitor banks.	
	AC-7a	Slightly inductive loads in household appliances and similar applications.	
	AC-7b	Motor-loads for household applications.	
	AC-8a	Hermetic refrigerant compressor motor control with manual resetting of overload releases.	
	AC-8b	Hermetic refrigerant compressor motor control with automatic resetting of overload releases.	
	AC-12	Control of resistive loads and solid-state loads with isolation by optocoupler.	60947-5
	AC-13	Control of solid-state loads with transformer isolation.	
	AC-14	Control of small electromagnetic loads.	
	AC-15	Control of a.c. electromagnetic loads.	
	AC-20	Connecting and disconnecting under no-load conditions.	60947-3
	AC-21	Switching of resistive loads, including moderate overloads.	
	AC-22	Switching of mixed resistive and inductive loads, including moderate overloads.	
	AC-23	Switching of motor loads or other highly inductive loads.	
a.c. and d.c.	A	Protection of circuits, with no rated short-time withstand current.	60947-2
	B	Protection of circuits, with a rated short-time withstand current.	
d.c.	DC-1	Non-inductive or slightly inductive loads, resistance furnaces.	60947-4
	DC-3	Shunt-motors, starting, plugging[1], inching[2], dynamic breaking of motors.	
	DC-5	Series-motors, starting, plugging[1], inching[2], dynamic breaking of motors.	
	DC-6	Switching of incandescent lamps.	
	DC-12	Control of resistive loads and solid-state loads with isolation by optocouplers.	60947-5
	DC-13	Control of d.c. electromagnets.	
	DC-14	Control of d.c. electromagnetic loads having economy resistors in circuit.	
	DC-20	Connecting and disconnecting under no-load conditions.	60947-3
	DC-21	Switching of resistive loads, including moderate overloads.	
	DC-22	Switching of mixed resistive and inductive loads, including moderate overloads, (e.g. shunt motors).	
	DC-23	Switching of highly inductive loads, (e.g. series motors).	

[1] By plugging is understood stopping or reversing the motor rapidly by reversing motor primary connections while the motor is running.

[2] By inching (jogging) is understood energizing a motor once or repeatedly for short periods to obtain small movements of the driven mechanism.

Source: ©International Electrotechnical Commission

FULL-LOAD CURRENT, THREE-PHASE ALTERNATING-CURRENT MOTORS

THREE-PHASE ALTERNATING-CURRENT MOTORS

	INDUCTION-TYPE SQUIRREL CAGE AND WOUND ROTOR (AMPERES)							SYNCHRONOUS-TYPE UNITY POWER FACTOR* (AMPERES)			
HORSEPOWER	115 VOLTS	200 VOLTS	208 VOLTS	230 VOLTS	460 VOLTS	575 VOLTS	2300 VOLTS	230 VOLTS	460 VOLTS	575 VOLTS	2300 VOLTS
1/2	4.4	2.5	2.4	2.2	1.1	0.9	—	—	—	—	—
3/4	6.4	3.7	3.5	3.2	1.6	1.3	—	—	—	—	—
1	8.4	4.8	4.6	4.2	2.1	1.7	—	—	—	—	—
1-1/2	12.0	6.9	6.6	6.0	3.0	2.4	—	—	—	—	—
2	13.6	7.8	7.5	6.8	3.4	2.7	—	—	—	—	—
3	—	11.0	10.6	9.6	4.8	3.9	—	—	—	—	—
5	—	17.5	16.7	15.2	7.6	6.1	—	—	—	—	—
7-1/2	—	25.3	24.2	22	11	9	—	—	—	—	—
10	—	32.2	30.8	28	14	11	—	—	—	—	—
15	—	48.3	46.2	42	21	17	—	—	—	—	—
20	—	62.1	59.4	54	27	22	—	—	—	—	—
25	—	78.2	74.8	68	34	27	—	53	26	21	—
30	—	92	88	80	40	32	—	63	32	26	—
40	—	120	114	104	52	41	—	83	41	33	—
50	—	150	143	130	65	52	—	104	52	42	—
60	—	177	169	154	77	62	16	123	61	49	12
75	—	221	211	192	96	77	20	155	78	62	15
100	—	285	273	248	124	99	26	202	101	81	20
125	—	359	343	312	156	125	31	253	126	101	25
150	—	414	396	360	180	144	37	302	151	121	30
200	—	552	528	480	240	192	49	400	201	161	40
250	—	—	—	—	302	242	60	—	—	—	—
300	—	—	—	—	361	289	72	—	—	—	—
350	—	—	—	—	414	336	83	—	—	—	—
400	—	—	—	—	477	382	95	—	—	—	—
450	—	—	—	—	515	412	103	—	—	—	—
500	—	—	—	—	590	472	118	—	—	—	—

*NOTE: For 90 and 80 percent power factor, the figures shall be multiplied by 1.1 and 1.25, respectively.

Source: National Electrical Code, Article 430 – Motors, Motor Circuits, and Controllers

FULL-LOAD CURRENTS IN AMPERES

SINGLE-PHASE ALTERNATING-CURRENT MOTORS

HORSEPOWER	115 VOLTS	200 VOLTS	208 VOLTS	230 VOLTS
1/6	4.4	2.5	2.4	2.2
1/4	5.8	3.3	3.2	2.9
1/3	7.2	4.1	4.0	3.6
1/2	9.8	5.6	5.4	4.9
3/4	13.8	7.9	7.6	6.9
1	16	9.2	8.8	8.0
1-1/2	20	11.5	11.0	10
2	24	13.8	13.2	12
3	34	19.6	18.7	17
5	56	32.2	30.8	28
7-1/2	80	46.0	44.0	40
10	100	57.5	55.0	50

Source: National Electrical Code, Article 430 – Motors, Motor Circuits, and Controllers

OHM'S LAW

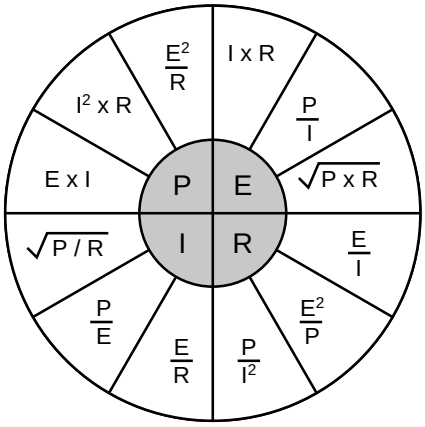

AC/DC FORMULAS

TO FIND	DIRECT CURRENT	AC 1-PHASE	AC 3-PHASE
Amps when Horsepower is known	$\frac{HP \times 746}{E \times Eff}$	$\frac{HP \times 746}{E \times Eff \times PF}$	$\frac{HP \times 746}{1.73 \times E \times Eff \times PF}$
Amps when Kilowatts is known	$\frac{kW \times 1000}{E}$	$\frac{kW \times 1000}{E \times PF}$	$\frac{kW \times 1000}{1.73 \times E \times PF}$
Amps when kVA is known	– –	$\frac{kVA \times 1000}{E}$	$\frac{kVA \times 1000}{1.73 \times E}$
Kilowatts	$\frac{I \times E}{1000}$	$\frac{I \times E \times PF}{1000}$	$\frac{I \times E \times 1.73 \times PF}{1000}$
Kilovolt-Amps	– –	$\frac{I \times E}{1000}$	$\frac{I \times E \times 1.73}{1000}$
Horsepower (output)	$\frac{I \times E \times Eff}{746}$	$\frac{I \times E \times Eff \times PF}{746}$	$\frac{I \times E \times Eff \times 1.73 \times PF}{746}$

ABBREVIATIONS:
E = Volts, I = Amps, W = Watts, PF = Power Factor, Eff = Efficiency, HP = Horsepower

AC EFFICIENCY AND POWER FACTOR FORMULAS

TO FIND	SINGLE PHASE	THREE PHASE
Efficiency	$\frac{746 \times HP}{E \times I \times PF}$	$\frac{746 \times HP}{E \times I \times PF \times 1.732}$
Power Factor	$\frac{\text{Input Watts}}{E \times I}$	$\frac{\text{Input Watts}}{E \times I \times PF \times 1.732}$

ABBREVIATIONS:
E = Volts, I = Amps, PF = Power Factor, HP = Horsepower

METRIC CONVERSION FACTORS

FROM	TO	MULTIPLY BY
LENGTH		
Inches (in.)	Millimeters (mm)	25.4
Inches (in.)	Centimeters (cm)	2.54
Feet (ft.)	Meters (m)	0.305
Yards (yd.)	Meters (m)	0.914
WEIGHT		
Ounces (oz.)	Grams (g)	28.3
Pounds (lb.)	Kilograms (kg)	0.454
Grams (g)	Ounces (oz.)	0.0353
Kilograms (kg)	Pounds (lb.)	2.20
TORQUE		
Pound inch (lb-in.)	Newton meters (Nm)	0.113
Newton meters (Nm)	Pound inch (lb-in.)	8.85
TEMPERATURE		
Degrees Fahrenheit (°F)	Degrees Celsius (°C)*	
Degrees Celsius (°C)	Degrees Fahrenheit (°F)†	

*Conversion Formula: 5/9 (°F - 32° F) = °C
†Conversion Formula: 9/5 (°C) + 32° F = °F

ANSI AND IEC ELECTRICAL SYMBOLS, CODES AND DESCRIPTIONS

ANSI SYMBOL	ANSI CODE	IEC 61346-2 SYMBOL	IEC CODE	DESCRIPTION
	CON		KM	Contactor Contact Open
	CON		KM	Contactor Contact Closed
	CR		KA	Relay Contact Open
	CR		KA	Relay Contact Closed
	TR		KT	Timed Contact, NO - On Delay (TDE)
	TR		KT	Timed Contact, NC - On Delay (TDE)
	TR		KT	Timed Contact, NC - Off Delay (TDD)
	TR		KT	Timed Contact, NO - Off Delay (TDD)
	SS		SA	Selector Switch
	PB		SB	Push Button NO
	PB		SB	Push Button NC
	PB		SB	Push Button Mushroom Head
	FL		SL	Liquid Level Switch
	FLS	F	SF	Flow Switch
	PS	P	SP	Pressure Switch
	TS		ST	Temperature Switch
	LS		SQ	Limit Switch
	PRS		SQ	Proximity Switch
A	LT	A	HL	Indicating Light
	PL		XS	Plug and Socket
CR	CR		KA	Control Relay Coil
C1	CON		KM	Contactor Coil
M1	M		KM	Motor Starter Coil
TR	TR		KA	Timer Coil
	SOL		YV	Solenoid Coil
	CTR		EC	Electromechanical Counter
	CB		QF	Circuit Breaker
	T1		X1 XT	Terminals (reference) Fused Terminals (reference)
	FU		FU	Fuse, Protective

Source: NFPA 79 Electrical Standard for Industrial Machinery

Effective Date: July 17, 2026

General – c3controls and Customer agree that the terms and conditions identified in this document and in any written c3controls specification of services to be furnished hereunder shall govern exclusively the sale or licensing by c3controls of all Goods, products and services (collectively referred to as "Goods"). No addition or modification to any of the terms and conditions as they appear in this document shall be binding upon c3controls unless agreed to in writing and signed by an authorized representative of c3controls. c3controls objects to all other terms and conditions that may be proposed by Customer.

Payment Terms – Payment terms to Customers with Satisfactory credit are net fifteen (15) days from date of invoice. Payment terms extended to customers enrolled in c3controls Loyalty Programs or c3controls authorized Stocking Distributor Program, with an account in Good Standing, are net thirty (30) days from date of invoice. If payment of any amount owed to c3controls is not made when due, c3controls reserves the right (in addition to and without limitation of its other rights) to suspend further performance without liability until such payment has been made. Customer agrees to reimburse c3controls for reasonable attorneys' fees and any other costs associated with collecting delinquent payments.

Minimum Order – c3controls has a $49 minimum order policy. Customers with established credit terms and in good standing, may submit their order through a purchase order. Customers who do not have established credit terms must make purchases by credit card (MC, Visa or AmEX).

Credit Card Payments – Customers making payment by credit card authorize c3controls, through its software subscription service, to collect all payments due and owing on all open invoices.

Shipment – Shipment will be F.O.B. c3controls factory, warehouse or other point of shipment by c3controls. Customer to pay all shipping, insurance and related expenses. COD orders will be processed through c3controls carrier of choice and include a handling fee. Scheduled or stipulated shipping dates are approximate and based upon prompt receipt of all necessary information from Customer. If shipment is delayed at the request of or due to acts or omissions by Customer, c3controls shall have the right to store the Goods at a place of its own choice at Customer's risk and expense.

Backorders ship at Customer expense. Additional shipping charges will apply to each shipment. Backorders will be held based on customer request.

Title and Responsibility – Title to Goods shall remain with c3controls as security only and until full payment is received by c3controls. Risk of loss or damage shall pass to Customer upon shipment from F.O.B point.

All replacement Goods provided hereunder shall be furnished on an exchange basis and may be new or, if not new, shall be equivalent in performance. The returned Goods which are replaced shall become the property of c3controls.

Export Packing – c3controls will pack Goods for air shipment and underdeck shipment in accordance with its regular export standard at no additional charge to Customer. Where such packing for export must conform to definite specifications that differ from the c3controls standard, Customer will be charged for the extra cost incurred.

Shipping Weights and Dimensions – Published weights are careful estimates but are not warranted. Dimensions shown in catalog are approximate.

Quotations – All written quotations automatically expire unless accepted within thirty (30) days from the date quoted. Verbal quotations expire at the close of business on the same day that they are made. In order for catalog orders to be binding, quotations must specifically identify Goods and list the actual quantities involved. All stenographic and clerical errors by c3controls are subject to correction. All quotations are subject to approval by an authorized representative of c3controls.

Published Prices – Prices shown in any c3controls publication are subject to change without notice and are not to be construed as a definite quotation or offer to sell by c3controls. Such publication is maintained only as a source of general information, and any prices shown therein are subject to confirmation with a specific quotation. Orders will be invoiced at prices prevailing at time of shipment.

With respect to services, unless otherwise agreed in writing by c3controls and Customer, (i) the price of any services shall be the c3controls published price therefore in effect as of the date such services are provided: and (ii) c3controls shall have the right to increase or decrease the price of any service effective with respect to any portion of service that have not been provided as of the date of such price change.

Published Documentation – The scope of the product, which shall include, but not limited to, range, description, specifications, or dimensions, shown in any c3controls publication is subject to change without notice. Such publication is maintained only as a source of general information, and any information shown therein is subject to confirmation. For manufacturing purposes, refer to the dimensions provided in the c3controls instruction leaflets, engineering drawings, or the dimensions provided on the products.

Taxes – The Customer shall pay or reimburse c3controls for all sales, use, excise or similar taxes.

Scope Change – All changes affecting Goods, delivery date or otherwise affecting the scope of the order are to be documented in writing and are subject to prior written approval of an authorized representative of c3controls. All changes approved by c3controls may result in price, delivery, specification, and/or other changes.

36-Month Warranty – Unless otherwise provided in writing and approved by c3controls, c3controls warrants, for a period of thirty-six (36) months from the date of the c3controls invoice, that all c3controls electrical control components & manufactured Goods (excluding panel assemblies, enclosures, plotter, plotter accessories and clearance sale products) will be of merchantable quality and free from defects in material workmanship and design in accordance with generally recognized, applicable and accepted practices and procedures in the industry as of the date of shipment of such Goods by c3controls. c3controls' warranty hereunder shall include specifications as agreed upon in writing by c3controls prior to the date of shipment; provided, however, that c3controls will not be liable for any loss or damage resulting from any design furnished by Customer and incorporated into the Goods. c3controls' warranty hereunder extends to Goods purchased by c3controls for sale with the Goods manufactured by c3controls only to the extent that the decision to incorporate such Goods is made solely by c3controls. Components manufactured by a third party ("Third-Party Components") may be integrated into, contained in, incorporated into, or attached to c3controls finished panel assembly Goods. While c3controls provides a one (1) year warranty on the panel assembly of the finished product containing Third-Party Components, the Third-Party Components are not covered by the warranty in c3controls' 36-Month Warranty or any warranty by c3controls. Any warranty applicable to a Third-Party Component shall be limited solely to the warranty extended by the original manufacturer of the Third-Party Component. For the avoidance of doubt, SELLER MAKES NO REPRESENTATIONS OR WARRANTIES WITH RESPECT TO ANY THIRD-PARTY COMPONENT, INCLUDING ANY (a) WARRANTY OF MERCHANTABILITY; (b) WARRANTY OF FITNESS FOR A PARTICULAR PURPOSE; (c) WARRANTY OF TITLE; OR (d) WARRANTY AGAINST INFRINGEMENT OF INTELLECTUAL PROPERTY RIGHTS OF A THIRD PARTY; WHETHER EXPRESS OR IMPLIED BY LAW, COURSE OF DEALING, COURSE OF PERFORMANCE, USAGE OF TRADE OR OTHERWISE. If a warranty issue arises in relation to a Third-Party Component, it must be reported to c3controls so that c3controls can coordinate any warranty through the third-party manufacturer.

Otherwise, and Again, any warranty applicable to such purchased Good Third-Party Components shall be limited solely to the warranty extended by the original manufacturer.

Repaired or replaced Goods are warranted for a period of six (6) months from the date of shipment of the replacement, or for the remainder of the original warranty term, whichever is longer.

Warranty coverage hereunder must be consistent with other provisions herein and shall be limited to the replacement, repair or modification of, or issuance of a credit for, the Goods involved, at c3controls' option, and only after the return of such Goods with c3controls consent in accordance with RETURN OF EQUIPMENT.

Warranty coverage hereunder is available only if (i) c3controls is promptly notified in writing upon discovery of an alleged defect, and (ii) c3controls' examination of the subject Goods discloses, to its satisfaction, that any alleged defect has not been caused by misuse; neglect; improper installation; improper operation; improper maintenance, repair alteration or modification; accident; or unusual deterioration or degradation of the Goods or parts thereof due to physical environment or due to electrical or electromagnetic noise environment. THIS WARRANTY IS IN LIEU OF ALL OTHER WARRANTIES WHETHER EXPRESSED, IMPLIED OR STATUTORY INCLUDING IMPLIED WARRANTIES OF MERCHANTABILITY OR FITNESS and thereby excludes certifications or the like for product performance, use or design with respect to any standard, regulation or the like (unless and to the extent independently approved in writing by an authorized representative) of C3CONTROLS AND (iii) EXTENDS ONLY TO CUSTOMER PURCHASING FROM C3CONTROLS OR AUTHORIZED C3CONTROLS RESELLER.

Limit of Liability – IN NO EVENT, REGARDLESS OF CAUSE, SHALL C3CONTROLS ASSUME RESPONSIBILITY FOR OR BE LIABLE (i) FOR PENALTIES OR PENALTY CLAUSES OR ANY DESCRIPTION, OR (ii) FOR INDEMNIFICATION OF CUSTOMER OR OTHERS FOR COSTS, DAMAGES, OR EXPENSES EACH ARISING OUT OF OR RELATED TO THE GOODS OR SERVICES OF THIS ORDER, OR FOR CERTIFICATION, UNLESS OTHERWISE SPECIFICALLY PROVIDED HEREIN, OR (iii) FOR INDIRECT OR CONSEQUENTIAL DAMAGES, UNDER ANY CIRCUMSTANCE, INCLUDING ANY LOSS, INJURY OR OTHER DAMAGES. C3CONTROLS MAXIMUM LIABILITY, INCLUDING DIRECT DAMAGES, SHALL NOT EXCEED THE AMOUNT OF THE PURCHASE ORDER. THIS LIMITATION OF C3CONTROLS LIABILITY WILL APPLY REGARDLESS OF THE FORM OF ACTION WHETHER IN CONTRACT OR TORT INCLUDING NEGLIGENCE. ANY ACTION AGAINST C3CONTROLS MUST BE BROUGHT WITHIN TWELVE (12) MONTHS AFTER THE CAUSE OF ACTION ACCRUES. Notwithstanding any provision of these Terms and Conditions, c3controls shall not be liable to any person for incidental, indirect, special or consequential damages, or for lost profits, savings or revenues of any kind, whether or not c3controls has been advised of the possibility of such damages. For purposes of this section, c3controls shall be deemed to include c3controls, it's subsidiaries and affiliates, and the directors, officers, employees, agents, representatives, subcontractors and suppliers of all of them.

Export Control – Any Goods or technical data supplied by c3controls under these Terms and Conditions are subject to the United States Export Administration Act and Regulations thereunder, which includes the licensing of certain products. It is the responsibility of the exporter to comply with the Act and Regulations.

Return of Equipment – Approval for return of Goods, whether under the Warranty clause or otherwise, must be obtained in writing from an authorized representative of c3controls. No approval shall be granted for the return of clearance sale products, or for the return of Goods under any circumstances where the original invoice date for such Goods is more than ninety (90) days prior to the date that a request is made to c3controls for such approval. All Goods returned must include reference to all pertinent order information for those Goods, including order, part, model, and serial numbers, as well as details of the system from which the Goods were removed, when appropriate. Except for Goods under warranty, cost for placing Goods returned for credit in a saleable condition will be charged to Customer.

Goods returned must be carefully packed so as to reach c3controls without damage. Goods accepted for return, which are not covered by a warranty, are subject to a minimum restocking charge, plus all transportation charges incurred by c3controls. Replacement Goods returned to c3controls must be in a repairable condition; otherwise, Customer will be billed per c3controls' policy.

Goods built to Customer's specification or Goods that have been modified by Customer cannot be returned for credit under any conditions.

All Goods to be returned must be shipped to locations stipulated by c3controls at the time c3controls approves the return of the Goods. The shipping container of all returned Goods must be clearly marked in accordance with c3controls' directives.

All credit memorandums issued directly by c3controls expire one (1) year from the date of the c3controls credit memorandum. Credits are worth no cash value and are not valid with any other offer. No cash back. Credits are only valid on c3controls' product and must be redeemed directly through the c3controls factory, Beaver, PA, USA.

Cancellation and Termination – Any order or contract may be terminated by Customer by written notice and upon payment to c3controls of reasonable and proper cancellation charges, including but not limited to all labor, facility, and equipment costs identified in the order or contract and which have been incurred prior to the date of notice of cancellation. All additional costs resulting from the cancellation and ten percent (10%) of the final net price will be included in the cancellation charges to compensate for disruptions in scheduling, planned production, and other direct costs to c3controls.

Payment shall be made within thirty (30) days from date of invoice. c3controls shall have the right to cancel any order or contract at any time by written notice due to any breach of the order or contract by the Customer. c3controls shall be entitled to collect cancellation charges as identified above.

No termination by Customer for default shall be effective unless and until c3controls shall have failed to correct such alleged default within (45) days after receipt by c3controls of the written notice specifying such default.

Force Majeure – c3controls shall not be liable for any loss, damage or delay in delivery due to acts of God or causes beyond its reasonable control including acts of Customer, acts of God or military authority, fires, strikes, floods, epidemics, quarantine restrictions, war, riots, delays in transportation, embargoes, or inability due to causes beyond its reasonable control to obtain necessary engineering talent, labor, materials, or manufacturing facilitates. In the event of such delay, the delivery date shall be extended for that length of time as may be reasonably necessary to compensate for the delay.

c3controls shall not be liable to Customer in any manner or be deemed to be in breach of the Same Day Shipping Guarantee because of any delay or any failure under the c3controls Same Day Shipping Guarantee if the delay or failure was due to any cause beyond c3controls reasonable control, which shall include, but not be limited to, acts of the Customer, acts of God or military authority, fires, strikes, floods, epidemics, quarantine restrictions, war, riots, delays in transportation, embargoes, or inability due to causes beyond its reasonable control.

Intellectual Property – c3controls shall defend any suit or proceeding brought against Customer or any Customer of Customer, so far as the same is based upon a claim that the design or construction of Goods sold by c3controls infringe a United States Patent, Copyright or Mask Work Registration (excepting a claim based upon a design or modification incorporated in such Goods at the request of Customer); provided that Customer promptly notifies c3controls of any such suit or proceeding in writing and provided that, at c3controls' expense, (a) Customer gives c3controls the right to defend or control the defense of any such suit or proceeding, including settlement, and (b) Customer provides all necessary information and assistance for defense on a timely basis. This obligation to defend shall extend, in the case of non-standard Goods sold by c3controls to Customer, to a claim based upon the use of Goods, but only when such use is not in combination with any other apparatus and only to the extent that c3controls was informed by Customer of such use in writing prior to the date of c3controls' shipment of the Goods. No implied license is granted to use the Goods in any infringing manner.

c3controls will pay all costs and damages finally awarded or agreed upon by c3controls that are directly related to any such claim. In the event the Goods, or any part thereof, is in such suit held to constitute infringement and the use of said Goods or part thereof is enjoined, c3controls will at its own expense either procure for Customer the right to continue using such Goods or part thereof, replace same with non-infringing Goods, modify the same so it becomes non–infringing, or remove the Goods and refund the purchase price and the transportation and installation costs thereof. THIS PARAGRAPH SETS FORTH C3CONTROLS ENTIRE LIABILITY WITH RESPECT TO ANY AND ALL INTELLECTUAL PROPERTY CLAIMS RELATED TO OR ASSOCIATED IN ANY WAY WITH THE GOODS.

Government Clauses and Contracts – No Government contracts, regulations or clauses shall apply to the Goods of this order or bind c3controls unless specifically agreed in writing by an authorized representative of c3controls.

Goods sold by c3controls are not intended to be used, nor shall they be used, as a "Basic Component" under 10 CFR 21 (NRC).

Visitor Passes – c3controls shall be provided such access to Customer's premises as c3controls deems reasonably necessary to enable c3controls to provide services to Customer in accordance with these terms and conditions and any applicable specification relating hereto. Notwithstanding anything in any visitor pass form, premises access agreement, or similar document presented by Customer to any c3controls representative as a condition of access to Customer's premises, c3controls and its representatives shall not: (i) be liable for any claim, injury or damage to Customer, its agents, employees or contractors or any third party relating to or arising out of c3controls visit or Customer's premises, except for incidents occurring while c3controls personnel are on Customer's premises and only to the extent such claim, injury or damage results directly solely from the negligence of c3controls representative; (ii) waive any claim for loss or damage to person or property caused by Customer, its agents, employees, contractors, or any third party; or (iii) release Customer, its agents, employees, or contractors or any third party from any claim for injury, loss or damage to person or property occurring during c3controls visit to Customer's premises.

Assignment – This agreement may not be assigned by either party without the written consent of the other party except that c3controls may, without the consent of Customer, assign this agreement to a present or future affiliate or subsidiary or assign the right to receive payment hereunder thereto.

Governing Law – This agreement shall be deemed to be made in and performed in the Commonwealth of Pennsylvania and shall be governed by and interpreted in accordance with the laws of the Commonwealth of Pennsylvania, including its provisions of the Uniform Commercial Code, but specifically excluding the provisions of the 1980 UN Convention Contracts for the International Sales of Goods. If any portion of these Terms and Conditions are found to be invalid or unenforceable, the parties agree that the remaining portions shall remain in full force and effect.

Patterns, Molds, Tools and Dies – Notice will be given if special patterns, molds, tools or dies are required to complete any order. Charges for such patterns or tools do not convey title thereto nor the right to remove the same from c3controls' plant. If patterns, molds, tools or dies are not used for a period of two years, c3controls shall have the right to scrap them without notice to Customer.

BUYING MADE EASY

Website

- Choose from over 17 million+ product configurations
- Buy direct from the manufacturer—instant access to product resources
- Register & save for instant discount + volume purchasing discount levels available
- No minimum purchase
- Free shipping on qualified orders
- Credit terms available for qualified accounts
- Simple re-ordering
- Convenient online order status
- Built-in tax exempt functionality

Catalog

- Step-by-step part configurator makes it easy to get exactly what you are looking for
- Popular configurations - save time by choosing from our most popular pre-configured product lists
- Easy reference - product icons and color coded tabs to make it easy to find the components you need

CONTACT US

Phone
724.775.7926

Mon. - Thur.: 8am - 6:30pm ET
Fri.: 8am - 6pm ET

Fax
724.775.5283

Online
c3controls.com
Secure online ordering 24/7

Mail
c3controls
Attn: Customer First
PO Box 496
Beaver, PA 15009, USA

Payment

Check, bank draft, money order, credit card or C.O.D.

Portfolio of world-class products

Our 17 million+ product configurations deliver durability and reliability—even in the most punishing environments—meeting and exceeding global standards for quality and safety.

series DS — **DISCONNECT SWITCHES** NON-FUSED & ENCLOSED — Sec 1 & 2

series 1100 series 1110 — **MINIATURE CIRCUIT BREAKERS** — Sec 3 & 32

series 300 non-reversing series 310 reversing — **CONTACTORS & CONTROL RELAYS** — Sec 4 & 5

series 320 — **OVERLOAD RELAYS** — Sec 6

series 620 — **DIRECT-ON-LINE STARTERS** CONTACTOR + OVERLOAD RELAY — Sec 7

series E620 — **ENCLOSED DIRECT-ON-LINE STARTERS** CONTACTOR + OVERLOAD RELAY — Sec 8

series 330 series E330 — **MOTOR PROTECTION CIRCUIT BREAKERS** OPEN & ENCLOSED — Sec 9 & 10

series 630 — **DIRECT-ON-LINE STARTERS** MOTOR PROTECTION CIRCUIT BREAKER + CONTACTOR — Sec 11

series E630 — **ENCLOSED DIRECT-ON-LINE STARTERS** MOTOR PROTECTION CIRCUIT BREAKER + CONTACTOR — Sec 12

series 3030 industrial series 3030 hazardous — **30MM PILOT DEVICES** FOR INDUSTRIAL & HAZARDOUS LOCATION — Sec 13 & 14

series 2222 iec series 2222 nema — **22MM PILOT DEVICES** IEC & NEMA — Sec 15 & 18

series WTL — **WORLD TOWER LIGHTS** — Sec 16

series CS — **CAM SWITCHES** — Sec 17

series 16 — **16MM PILOT LIGHTS** — Sec 19

series 13 — **13MM PILOT LIGHTS** — Sec 20

series EC — **CONTROL STATION ENCLOSURES** — Sec 21

series ECP 300 — **ENCLOSED UL508A COMBINATION MOTOR STARTERS** — Sec 30

series EPS — **ENCLOSED POWER SUPPLIES** — Sec 33

series ECP BP — **VFD BYPASS PANELS** — Sec 36

series IPS — **INDUSTRIAL POWER SUPPLIES** — Sec 31

series CCT — **CONTROL CIRCUIT TRANSFORMERS** — Sec 34

series CPT — **CONTROL POWER TRANSFORMERS** — Sec 37

series TB — **TERMINAL BLOCKS** — Sec 22, 23 & 24

series TBR — **TERMINAL BLOCK RELAYS** — Sec 27

series ETR — **ELECTRONIC TIMING RELAYS** — Sec 25

series 200 series 210 — **GENERAL PURPOSE RELAYS** — Sec 35

series WD — **WIRING DUCT** — Sec 28

series DIN — **DIN RAIL** — Sec 22 & 23

664 State Avenue | Beaver, PA 15009 | 724.775.7926

c3controls.com

c3controls Edition 27 catalog. Copyright © 2026 c3controls. All Rights Reserved.

c3controls®

Everything under control.

REVISION 06.2026