SAGINAW CONTROL & ENGINEERING
SCE-466019DCCSS

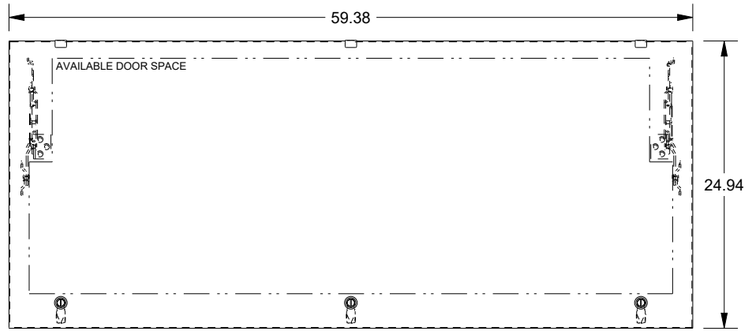

SLOPE DOOR DETAIL

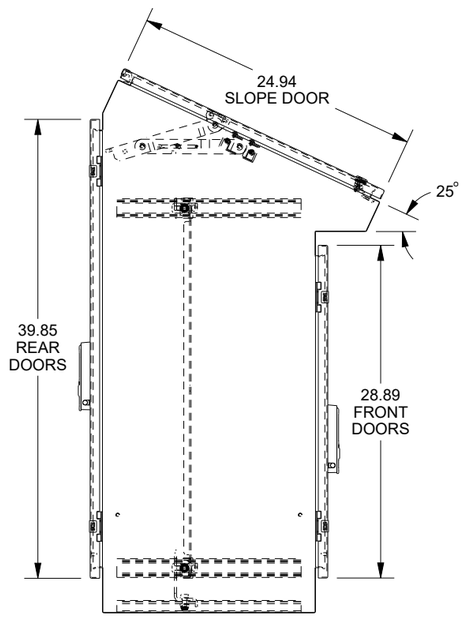

LEFT SIDE VIEW

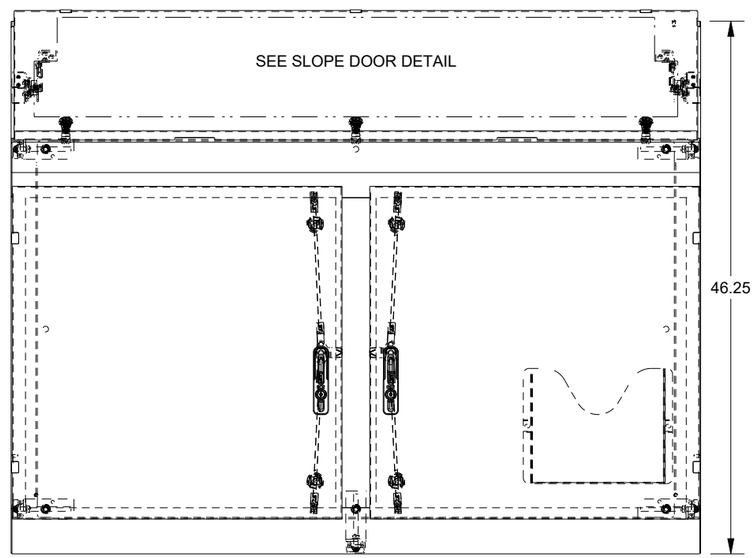

FRONT VIEW

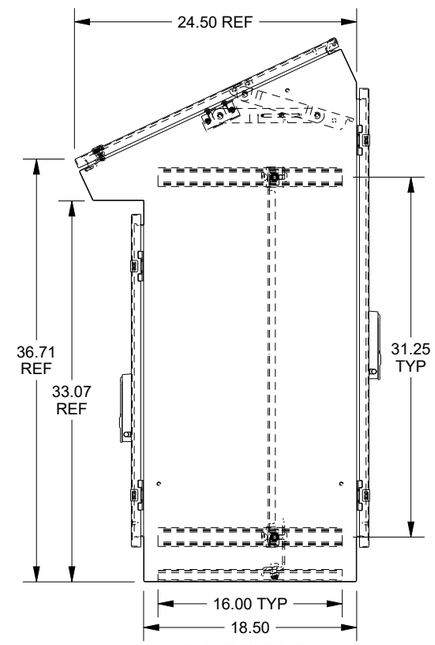

RIGHT SIDE VIEW

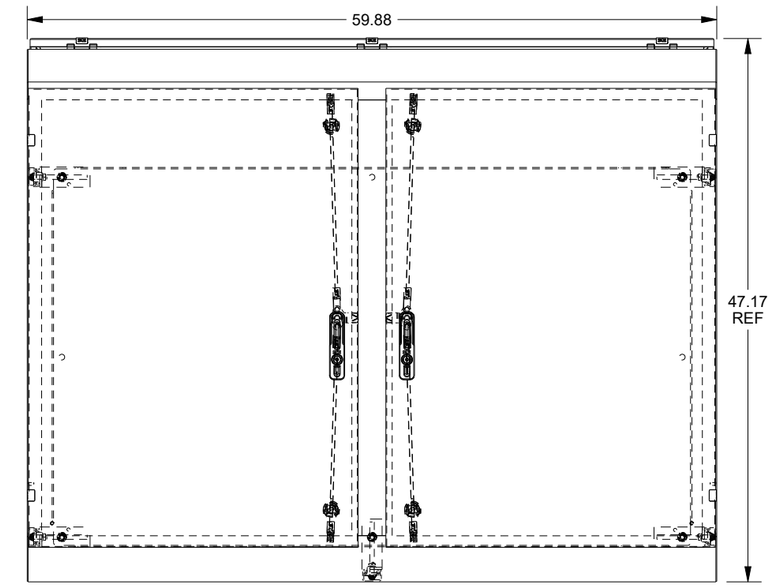

REAR VIEW

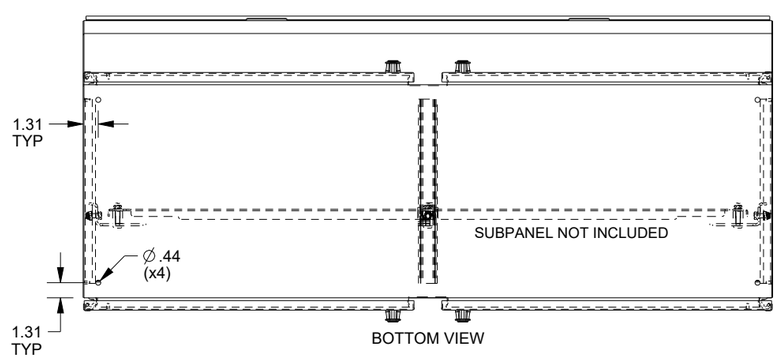

BOTTOM VIEW

DATA SUBJECT TO CHANGE WITHOUT NOTICE