SAGINAW CONTROL & ENGINEERING
SCE-907224FSDAD

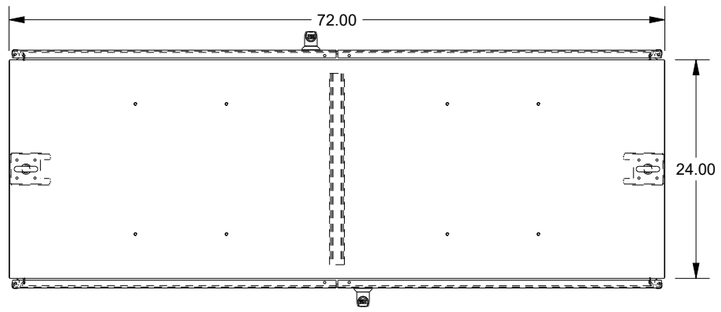

TOP VIEW

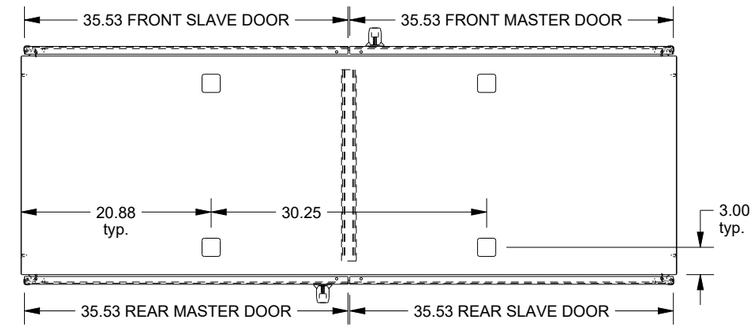

BOTTOM VIEW

WASH SYSTEM 2" SQUARE DRAIN HOLES
IN THE BOTTOM WITH UL APPROVED
HOLE SEALS PROVIDED

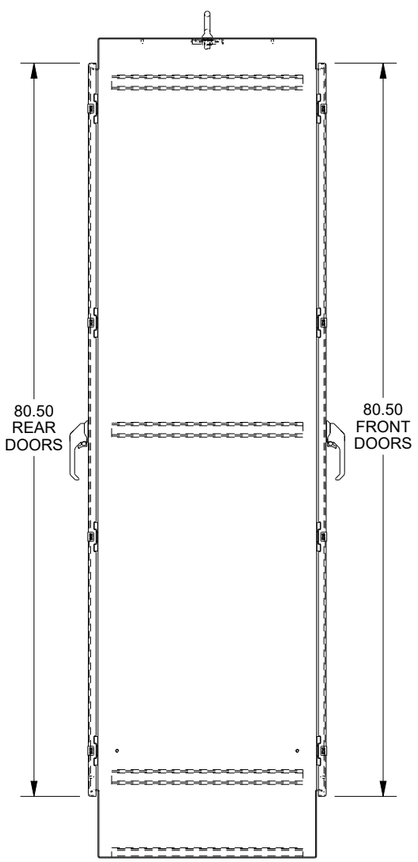

LEFT SIDE VIEW

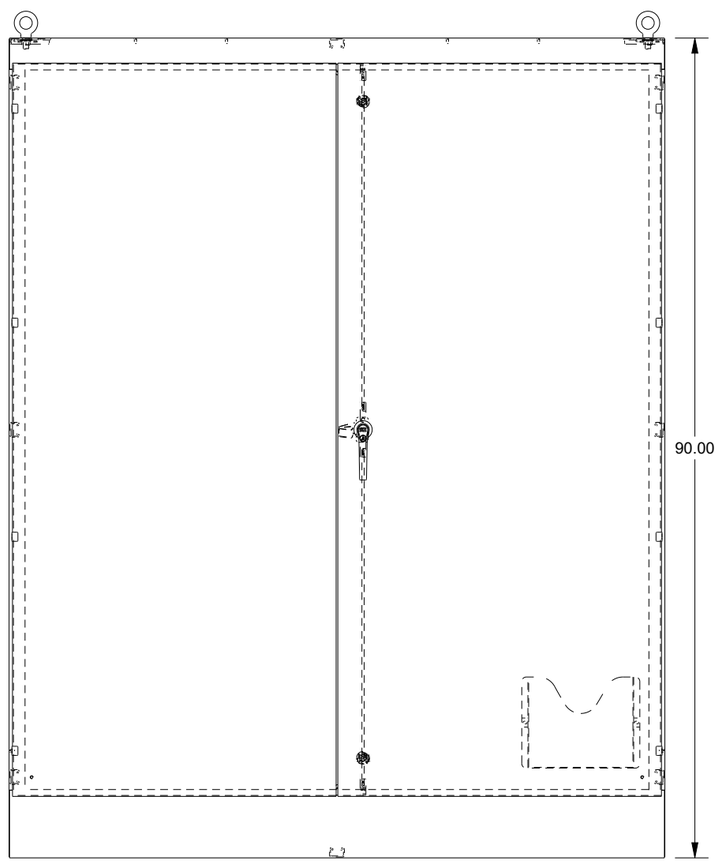

FRONT VIEW

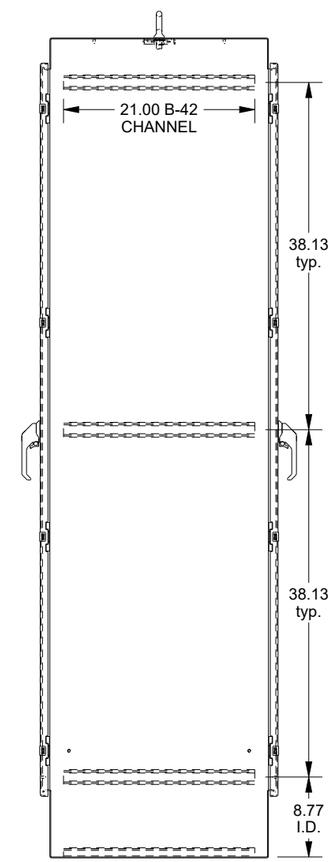

RIGHT SIDE VIEW

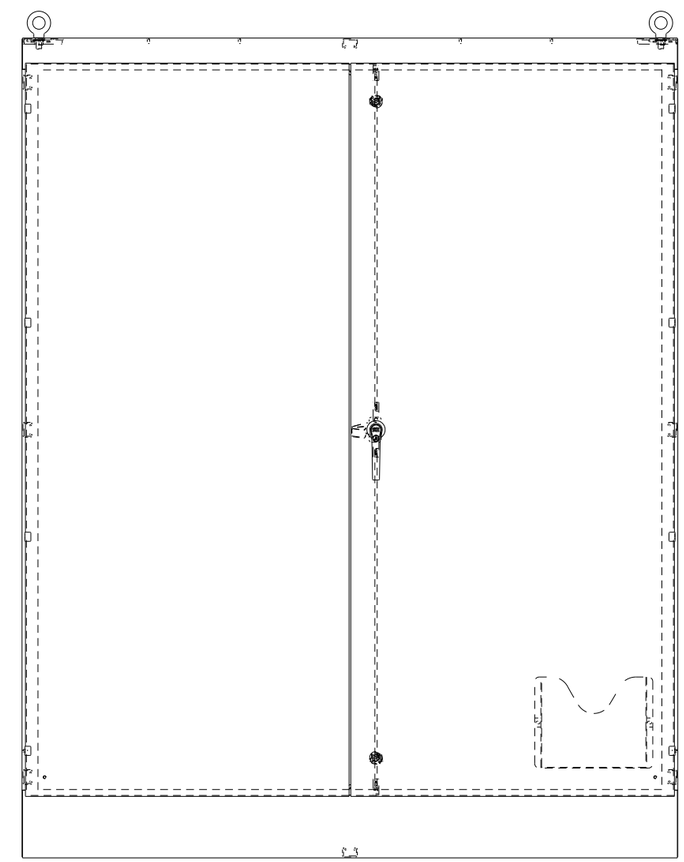

EXTERNAL REAR VIEW

DATA SUBJECT TO CHANGE WITHOUT NOTICE